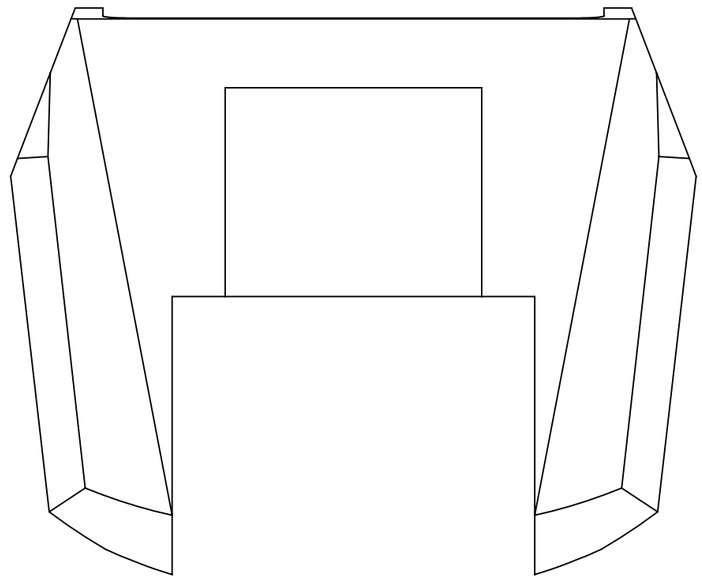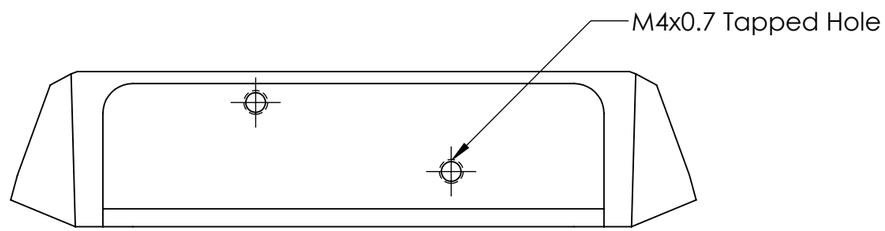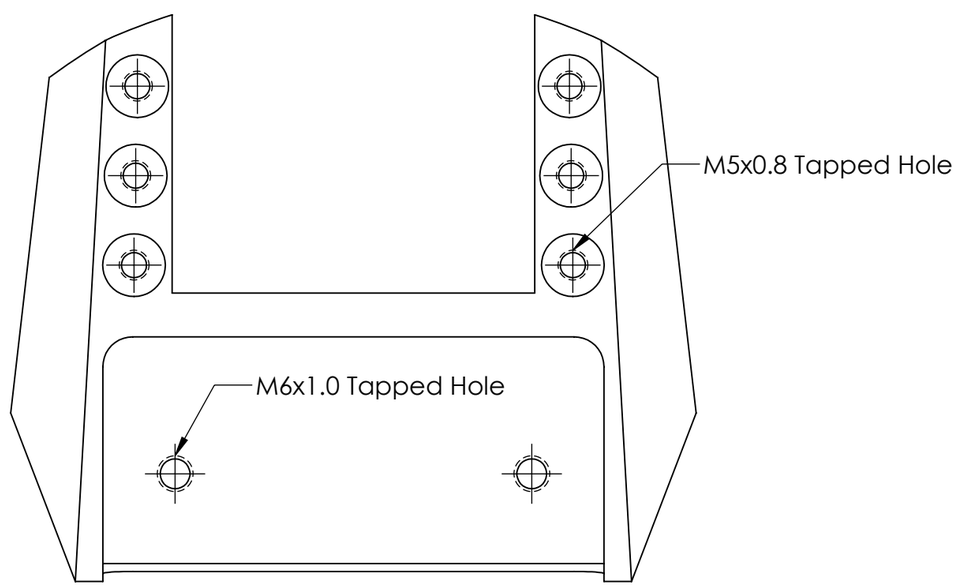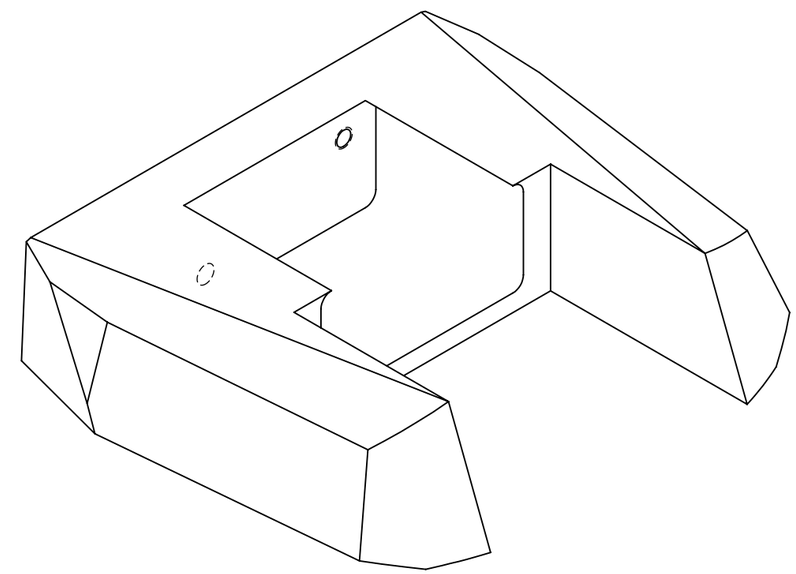REVISIONS				
ZONE	REV.	DESCRIPTION	DATE	APPROVED