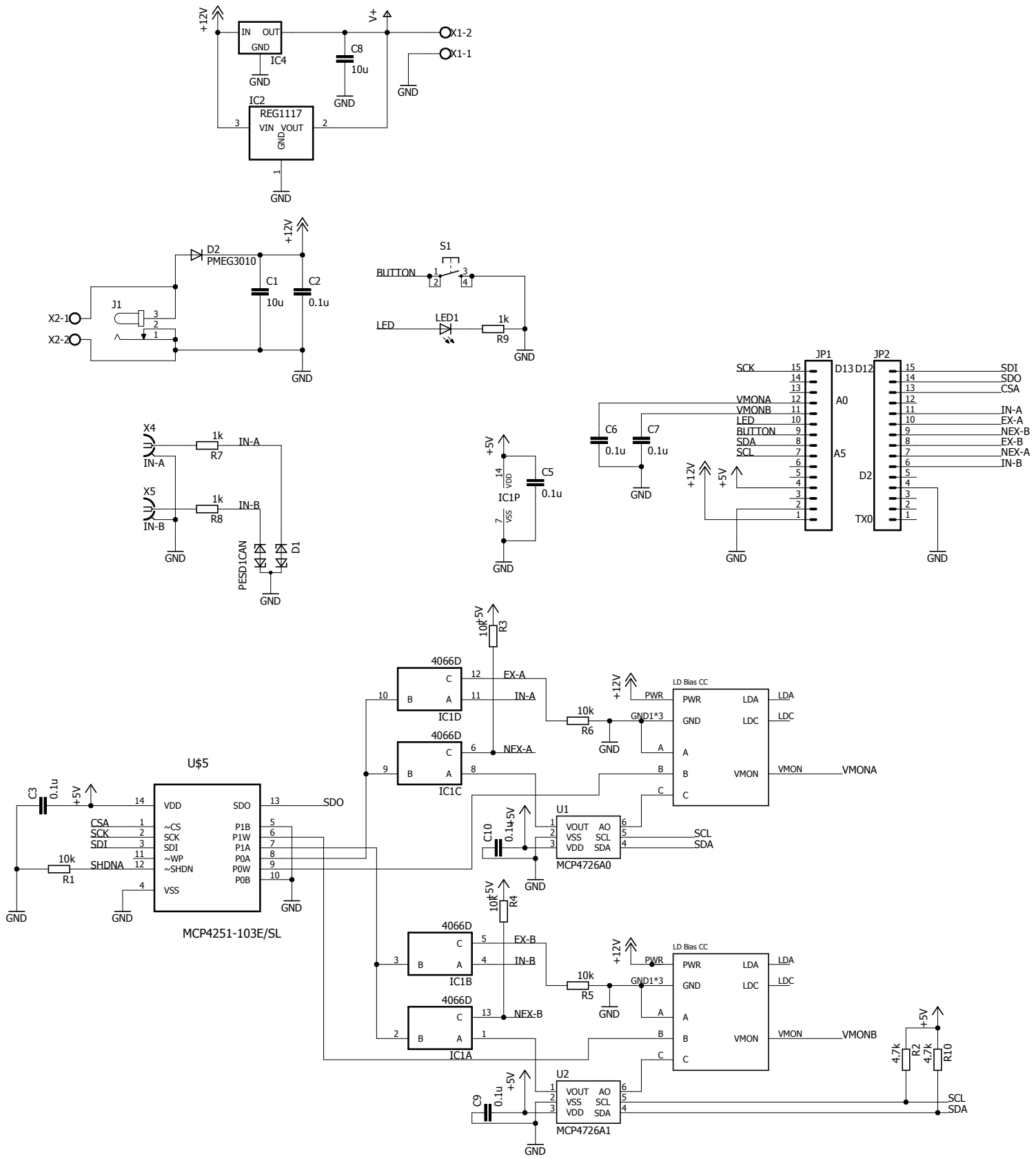
+12V
IN OUT
GND
IC4
GND
C8
10u
GND
V+
X1-2
X1-1
GND
IC2
REG1117
VIN VOUT
GND
GND
+12V
D2
PMEG3010
C1
10u
C2
0.1u
J1
X2-1
X2-2
GND
S1
BUTTON
LED
LED1
1k
R9
GND
JP1
JP2
SCK
VMONA
VMONB
LED
BUTTON
SDA
SCL
D13 D12
A0
A5
D2
TX0
SDI
SDO
CSA
IN-A
EX-A
NEX-B
EX-B
NEX-A
IN-B
C6
0.1u
C7
0.1u
GND
+12V
+5V
GND
X4
IN-A
1k
R7
IN-A
X5
IN-B
1k
R8
IN-B
GND
PESD1CAN
D1
GND
+5V
IC1P
VDD
VSS
C5
0.1u
GND
10k
R3
4066D
IC1D
EX-A
IN-A
10k
R6
GND
+12V
LD Bias CC
PWR
GND
GND1*3
LDA
LDC
VMON
VMONA
4066D
IC1C
NEX-A
U$5
C3
0.1u
+5V
VDD
SDO
SDO
CSA
SCK
SDI
~CS
SCK
SDI
~WP
~SHDN
VSS
P1B
P1W
P1A
P0A
P0W
P0B
10k
R1
SHDNA
GND
GND
GND
MCP4251-103E/SL
C10
0.1u
+5V
U1
VOUT AO
VSS SCL
VDD SDA
MCP4726A0
SCL
SDA
GND
10k
R4
4066D
IC1B
EX-B
IN-B
10k
R5
GND
4066D
IC1A
NEX-B
VMONB
4.7k
R2
4.7k
R10
+5V
C9
0.1u
+5V
U2
VOUT AO
VSS SCL
VDD SDA
MCP4726A1
SCL
SDA
GND