APRI0007-1: Major project in electrical engineering
Pota'bot

Final report

Authors
Jérôme Adriaens
Lola Charles
Manon Cornet
Elisa Rodriguez de la Rosa
Cédric Verstraeten

Instructors
Marc Biron
Bernard Boigelot
Guillaume Drion
Jean-Michel Redouté

Academic year 2021-2022

Abstract

In a period when time and resources are increasingly scarce, the automation of everyday systems is one of the most important topics of research and innovation. The Faculty of Applied Sciences of the University of Liège has the chance to develop a space dedicated to the optimized cultivation of vegetable plants: the *Pot'Ingé*. Within the framework of the Major project in Electrical Engineering, the idea to develop a miniature vegetable garden with a fully autonomous watering system emerged. This system, called the *Pota'bot*, is based on the soil moisture needs of the plants it hosts. It waters them in the right quantity when necessary. As well as saving time for the gardeners, it saves water by watering each plant to the required moisture level. This report describes the approach followed to carry out this project, both in terms of the evolution of the initial idea and in terms of the construction, the computations, numerical and physical simulations and physical tests. The difficulties and compromises, both mechanical and electrical, are also mentioned. A section is dedicated to the organization and team management that led to the success of this project. This project led to the realization of electronic and mechanical circuits, the development of a software able to manage all the components and constraints in real time as well as the creation of a control system.

Contents

I General introduction **5**

1 General description of the project **5**

2 Detailed description of the *Pota'bot* system **5**

3 Structure of the report **6**

II Hardware analysis and design **7**

1 The MCU **7**

2 The sensors **7**
2.1 Soil moisture sensors 8
2.2 Water level sensor 14

3 The actuators **16**
3.1 Pump 16
3.2 Electro-valves 17

4 The user interface **19**

5 The power supply system **20**

6 The design of the PCB **21**
6.1 Box design 22

III Control system analysis and design **23**

1 Introduction **23**

2 Starting model **23**
2.1 Equations 23
2.2 State-space representation 24

3 Experimental measurements **24**
3.1 Hydraulic Circuit Inflow 24
3.2 Saturation of the Soil 25
3.3 Penetration Rate of Flow in the Soil 26
3.4 Voltage and soil moisture relation 27
3.5 Evaporation speed 27

4 Final model **27**
4.1 Parameters Change 27
4.2 System in Simulink 28

5 Realistic simulations **30**
5.1 Sets of parameters 30
5.2 Parameters Tests 31
5.3 PID parameters 33

IV Embedded software design **34**

1 General description of the software **34**

2 Inventory of the tasks **34**
2.1 Task τ_1: Water level sensor check 34
2.2 Task τ_2: AD conversions and PID controller of zone 1 35
2.3 Task τ_3: AD conversions and PID controller of zone 2 35
2.4 Task τ_4: Pump activation and valve opening 35
2.5 Task τ_5: Acquisition of the AD conversion data for display on the LCD screen 36
2.6 Task τ_6: Dealing with the bouncing effect in buttons 36
2.7 Task τ_7: Display soil moisture data on the LCD screen and buttons value check 37

3 Software architecture **37**

4 Tasks scheduling **37**

5 Processing of the signals returned by the soil moisture sensors **38**

6 System state diagram **39**

V Construction and design of the system **41**

1 Box design **41**

2 Vegetable garden structure **42**

3 Hydraulic system **42**

4 Final system **43**

VI Practical Realisation of the System **44**

1 Explanations of tests conducted **44**
1.1 First test: overall system operation 44
1.2 Second test: control parameters verification 44

VII Management of the project **46**

1 Project start **46**
1.1 Scope and project charter 46

2 Distribution of work among group members **47**

3 Planning of the project **48**

4 Risks assessment and management (FMEA) **49**

5 Budget management **50**

6 Contact with the client **51**

VIII Conclusion **52**

1 Key results **52**

2 Skills acquired through the project **52**

3 Potential improvements **52**

IX Acknowledgements **54**

Appendices **56**

A General circuit **56**

B Component list **57**

C Sensors calibration **57**
C.1 Measures 57

D Project charter **58**

Part I
General introduction

1 General description of the project

This report presents a project that was carried out by five students in the first year of the Master's degree in Electrical Engineering within the framework of the Major Project in Electrical Engineering course at the University of Liege, Faculty of Applied Sciences. The project had to meet some requirements. It had to include an embedded system in which a feedback control system is implemented. This embedded system had to be paired with an electronic circuit so that the software and the hardware parts of the project would work together.

The idea of the project comes from the *Pot'Ingé*. The members of the *Pot'Ingé* came up with the idea when they realized that the watering of their cultivated surfaces was taking a lot of time and that the process was not optimal in terms of water quantity used. The realization of this project thus starts from a real practical problem and must meet the additional constraint to answer the expectations of a clearly identified customer.

The realized system was thus thought and implemented in order to satisfy the constraints imposed by the course and by the customer.

2 Detailed description of the *Pota'bot* system

The *Pota'bot* system consists of a vegetable garden box equipped with an automatic watering whose activation depends on the moisture content in the soil. The box is divided in two different zones with independent soil moisture requirements. The current soil moisture is obtained using four capacitive soil moisture sensors, i.e. two sensors per zone. In order to process the signals returned by the sensors, the microcontroller must perform four analog-to-digital conversions. For each zone, the system should continuously perform a comparison between a reference soil moisture data, entered by the user via buttons, and the current soil moisture, given by the capacitive soil moisture sensors. Based on this comparison, a PID controller deducts whether the vegetable garden must be watered. In this case, the PID controller should send a signal to open the valve corresponding to the area to be watered, and then a signal to activate the pump.

The system should also continuously monitor the water level in a tank with a water level sensor to avoid damage to the pump if it is running dry. This sensor points out if the water in the tank exceeds the maximum level or is below the minimum level. A green LED must be lit up if the water in the tank is between the minimum and maximum levels. An orange LED must be lit up if the water in the tank exceeds the maximum level. Finally, a red LED must be lit up if the water in the tank is below the minimum level.

Besides, the system contains an user interface. The user interface consists of a LCD display and three buttons. The LCD display should display, at any time, the current soil moisture and the reference soil moisture data entered by the user. The user encodes the target soil moisture using three buttons: a "*UP*" button to increment the target soil moisture value, a "*DOWN*" button to decrement the target soil moisture value and a "*OK*" button which allows both to send the target soil moisture value to the PID controller and to switch on the selection of the target value of the other zone of the vegetable garden.

The plants that are intended to be able to grow in the vegetable garden are aromatic plants.

3 Structure of the report

The structure of the report does not follow a chronological logic but rather presents the different parts of the project in a coherent way.

The first part is therefore devoted to the hardware part as a whole since it constitutes the basis of the project in theoretical and practical terms.

Then comes the control part. It is dedicated to the design and study of the theoretical model of the system as well as to the study of its behavior in real conditions.

Thirdly, the software part is presented. This part links the control part and hardware parts together. Indeed, it manages the interactions between all parts of the system.

Then, the part dealing with the practical realization of the mechanical elements composing the project comes. It allows to give a much more concrete account of the implementation of the system.

The sixth part includes analyses and results from tests carried out in the real operating conditions of the project and includes discussions of a much more practical nature.

Finally, the management part comes last and covers all the tools that allowed the project to succeed.

Note on the definition of soil moisture:
In this report, there are many references to the **soil moisture** quantity. This quantity is measured by sensors that are partially buried in the ground, i.e. the soil moisture sensors. The automatic irrigation system is entirely based on measuring this value and controlling it. Therefore, it is necessary to clearly define what this quantity refers to. The definition can be found in Section 2.1.4 of the report.

Part II

Hardware analysis and design

This part is focused on the hardware of the *Pota'bot* system. The sensor system, actuator system and power supply system are presented as well as the user interface and its functioning. A word about the PCB design and its assembly will be said. A detailed list of the electronic components used can be found in the appendix Tab.4.

The global architecture of the system showing the main connections can be seen in Fig.1. In the Appendix is the circuit more detailed in Fig.45, this will be mentioned several times in the following because it contains subcircuits involved in different systems and is the main piece of the electronics.

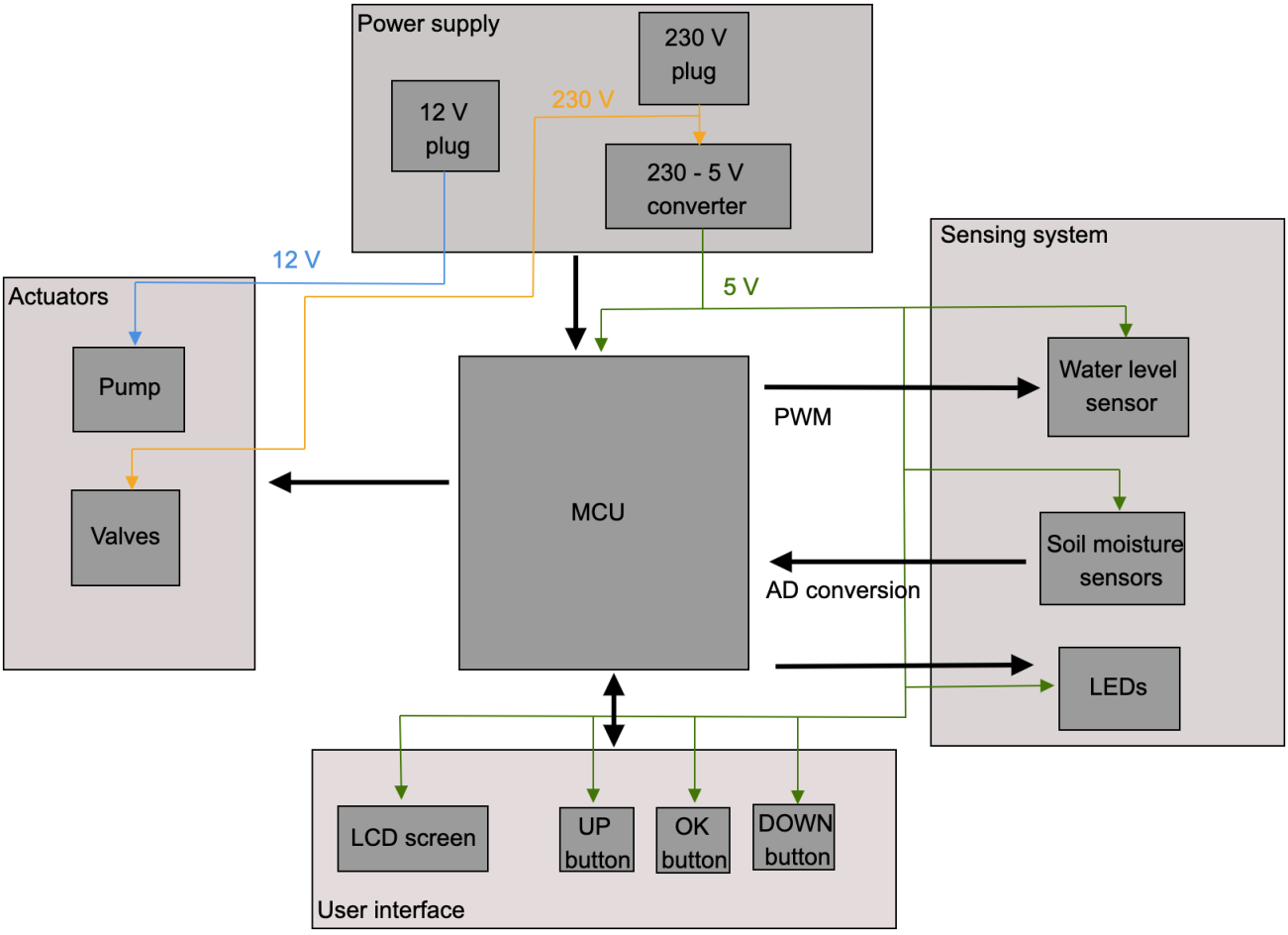

Figure 1: General architecture of the hardware part

1 The MCU

The microcontroller provided for this project is the 8-bit *PIC16(L)F1789* [11] microcontroller. To be able to program it, a *PICkit* circuit programmer is used. The circuit to connect it is represented in Fig.45 with the connector *PICKIT*.

2 The sensors

In the scope of the project, two types of sensors are used: soil moisture sensors and water level sensors. Both these sensors, their functioning and particularities are explained in detail in this section.

2.1 Soil moisture sensors

The soil moisture sensors were bought already built as shown in Fig.2. Their use, working principle as well as the practical solution developed in order to use them in rough conditions are described below.

2.1.1 Use

There are four soil moisture sensors for the whole box, i.e. two in each zone. They are used to measure the water content of the soil. Therefore, they are used in the control system to give a feedback on the soil moisture percentage such that the plants are not drowning nor dying of thirst.

Figure 2: Soil moisture sensor

2.1.2 Working principle

Considering the lack of official datasheet or documentation given by the producer about this type of sensor, some research were made in order to understand its working principle. Two detailed studies about this sensor were found. The following analysis is thus inspired from the these two studies [12] and [5]. Nevertheless, some self experiments were also conducted in order to understand the sensor's behaviour.

The circuit diagram[1] of the sensor is shown in Fig.3.

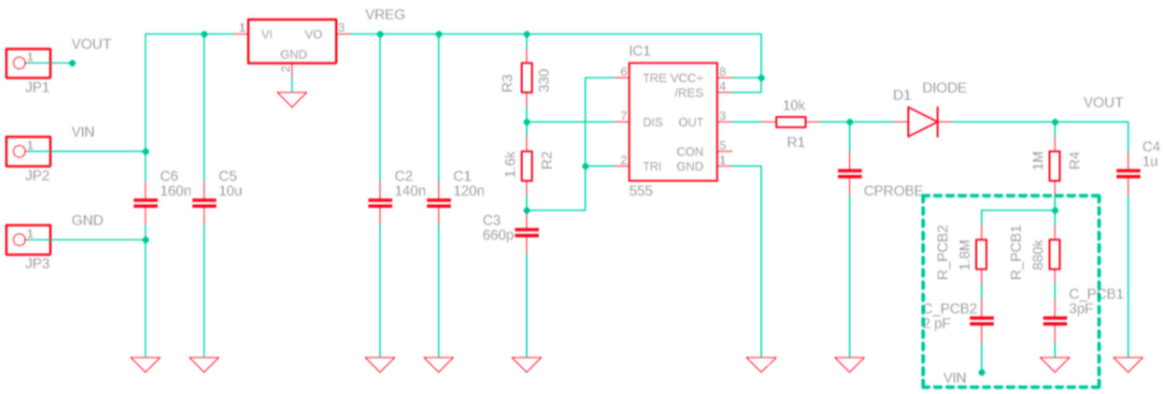

Figure 3: Circuit diagram of the capacitive soil moisture sensor extracted from [12].

The sensor has to be powered by a voltage between 3.3 [V] and 5 [V] DC. However, a 3.3 [V] regulator is present on the sensor's chip so that the reference does not change if its power supply changes.

The TLC555 is used to generate pulses at 1.5 [MHz]. These pulses pass through a RC low-pass filter (i.e. integrator circuit) made of R_1 and C_{probe}. The capacitance C_{probe} is a varying capacitance resulting from the capacitor formed by the two co-planar copper plates inside the peak of the sensor. The two co-planar copper plates are highlighted in Fig.4.

[1] The capacitances and resistances in the doted frame are linked to the PCB itself.

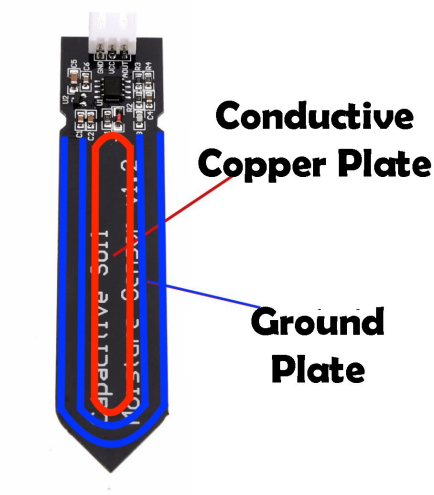

Figure 4: Copper plates in the soil moisture sensor

The RC filter integrates the square wave into a triangle wave which then passes through the diode D_1 and charges the capacitor C_4. The diode only conducts when the voltage of the triangle wave is above threshold of the diode. When it is below, the capacitor C_4 discharges in the big resistance R_4. In fact, due to the chosen value of R_4 and C_4, almost no discharge occurs because the time constant $\tau = 1/R_4C_4 = 1$ [s] is way bigger than the period $T = \frac{1}{f} = 0.67$ [μs] of the signal. Then, C_4 holds the signal at a voltage between 0 [V] and 3 [V][2]. This signal is the analog output voltage of the sensor. Thus, in response to a moisture content of the soil and through a measure of variable capacity the sensor produces a certain voltage.

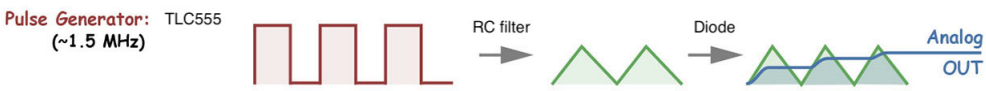

Figure 5: Signal in the circuit of the soil moisture sensor

The capacitor whose capacitance is C_{probe} is the interesting capacitor because it dictates the sensor's behaviour. Its dielectric is the mix "soil, air and water". The electric permittivities of the different elements at the working frequency are :

$$\begin{cases} \epsilon_0 = 8.85418782 \times 10^{-12} \quad [\text{F/m}] \\ \epsilon_{\text{air}} = \epsilon_0 \\ \epsilon_{\text{dry soil}} = [2, 6] \times \epsilon_0 \\ \epsilon_{\text{saturated soil}} \approx 30 \times \epsilon_0 \\ \epsilon_{\text{water}} = 80 \times \epsilon_0 \end{cases} \tag{1}$$

where $\epsilon_{\text{saturated soil}}$ is the electric permittivity of the soil when saturated in water.

The contribution of the air can be neglected. This gives the following relation for the total electric permittivity of the soil:

$$\begin{aligned} \theta_v &= \frac{V_{\text{water}}}{V_{\text{tot}}} \\ \epsilon_{\text{tot}} &= (1 - \theta_v)\epsilon_{\text{moist soil}} + \theta_v \epsilon_{\text{water}} \end{aligned} \tag{2}$$

where θ_v is the volumetric water content, V_{tot} is the total volume of the soil sample with the water, V_{water} is the volume of water and $\epsilon_{\text{moist soil}} \in [\epsilon_{\text{dry soil}}; \epsilon_{\text{saturated soil}}]$ is the electric permittivity of the soil at its actual moisture.

[2]It is the maximal theoretical output range.

Therefore, it is obvious that the amount of water in the dielectric (i.e. in the soil) has an impact on the capacitance C_{probe} by the relation :

$$C_{\text{probe}} \propto \epsilon_{\text{tot}}$$

The output of the sensor is determined as follows: when C_{probe} changes, the RC filter changes, the triangle wave amplitude changes and thus the output amplitude changes too. The dryer the soil, the higher C_{probe} and the higher the output voltage, and vice versa.

The electrical circuit associated to the soil moisture sensors in order to collect the output in the MCU is represented in Fig.6. The sensors are denoted by a connector named *SMS*. As can be seen, each sensor has a decoupling capacity placed as close as possible to the pin of the microcontroller to remove the additional noise on the measures.

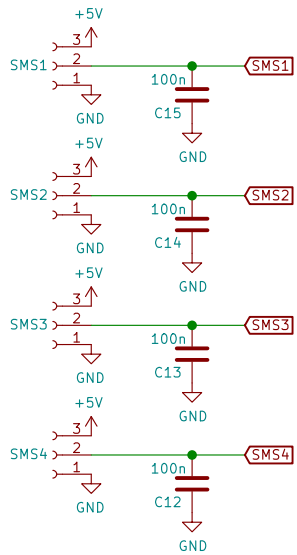

Figure 6: Soil moisture sensor's connection to the microcontroller

2.1.3 Practical design

First, considering that the sensors are used quite far away from the PCB, three cables of ∼1.5 [m] long were soldered on the three pins (V_{in}, V_{out} and GND) already present on each sensor chip. These welds are then protected with heat-shrink sheaths. Moreover, the three long cables are twisted together to cancel as much as possible parasitic signals.

Then, in order to be used in a rough environment (water, dirt,...) the electronics that makes up these sensors need to be protected. A layer of Kontakt Chemie Plastik 70[6], which is a "waterproof" spray, has been applied on the whole sensor to avoid damaging the components and water infiltration in the PCB. However, the results obtained afterwards were not satisfying. Indeed, the output of the sensors was still highly disrupted by dirt and water touching the connections. Some other problems due to the layer thickness on the sensing part distorted the measurements returned by the sensors. The layer on this part was thus removed afterward due to its perturbations on the measurements. Therefore, to ensure a full hermetic protection, a resin based on polyurethane has been applied. This resin encapsulates the entire electronic part as well as part of the cables. However, some areas were still not fully hermetic and a final layer of silicone has been applied to ensure it. A single sensor has been fully isolated with silicone to see if the isolation was acceptable also with this simple solution.

Finally, the sensors were quite sensitive to small perturbations. Thus it was decided to do some means on the measurements as well as working with 5% of precision. This is further explained in the Software part.

2.1.4 Calibration

The calibration of the soil moisture sensors was important because of the lack of datasheet about them and the uncertainties concerning their behavior . The procedure used is inspired from [12] p.10-11 and [5] p.7-10 and is based on the gravimetric methods. The calibration was performed for a fixed volume of dry/wet soil and is based on the formula of gravimetric water content:

$$w = \frac{W_{tot} - W_s}{W_s} = \frac{W_w}{W_s} \tag{3}$$

where the different terms of the equation are defined as:

- $w \equiv$ gravimetric water content in %
- $W_{tot} \equiv$ The total weight of wet soil in [kg]
- $W_s \equiv$ The weight of dry soil in [kg]
- $W_w \equiv$ The weight of water in [kg]

The following procedure describes how the calibration of the soil moisture sensors was carried out.

1. Take a sample of the potting soil from the vegetable garden
2. Dry the soil sample in the oven.
   The potting soil sample is placed in the oven for about 2 hours at 100°C. To ensure that the moisture is removed, the oven door is kept open during the whole drying process.

Figure 7: Soil drying

3. Measure the mass and the volume of the dry soil sample and the mass of the container:
   The measurements gave the mass of the container $m_{container} = 41$ [g], le mass of the dry soil sample $m_s = 165$ [g] and the volume of the soil sample $V_s = 800$ [ml]. The same volume is maintained throughout the whole calibration procedure.
4. Wet the soil with $\approx 16,5$ [mL] of water (this represents 10 % water content)

Figure 8: Step 4: Soil wetting

5. Mix the wet soil around to ensure that the water is evenly distributed and wait a few minutes for the water to diffuse into the soil.
6. Measure the mass of the wet soil
7. Place a sensor in the wet soil sample and read its output voltage (all the measured voltages have been progressively collected in an excel)

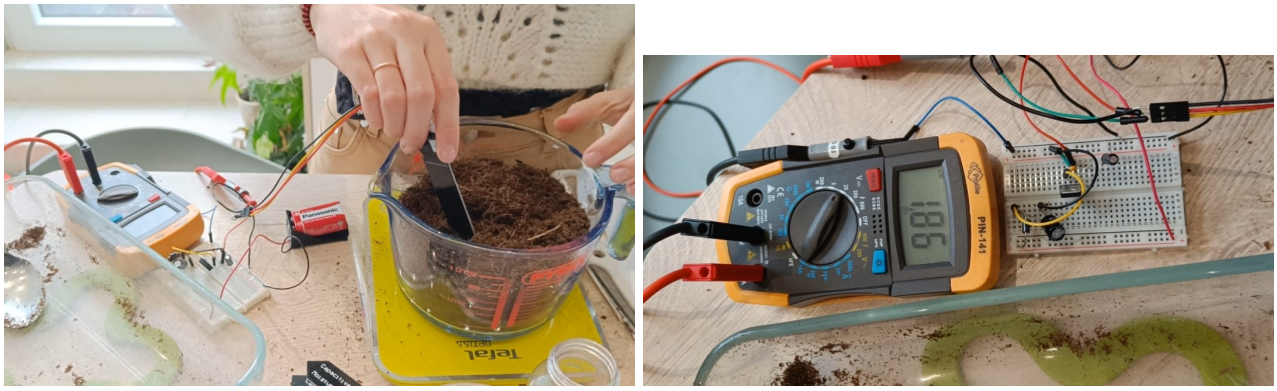

(a) (b)

Figure 9: Step 7: Measuring the output of the sensors

8. Repeat the previous operation (step 7) for the four sensors. When all done, take the mean of the four measured output voltages
9. Repeat steps 4 to 8 until the soil is saturated and starts to seep water

The saturation was observed for a gravimetric content of 210%. The excel table containing all the measurements made is represented in Fig.46 of the Appendix.

Blue points in Fig.10 represent the mean of the four sensors measured output voltages. They are plotted on graphics as a function of the gravimetric water content. The dry reference, i.e. when the soil is dry and water has not been added yet, is taken as the 0% of soil moisture reference. On the other hand, saturation is taken as the 100% of soil moisture point. Thus, to all the sensors output voltage measured is associated a soil moisture percentage $\in [0, 100]\%$.
The process of calibration has highlighted a definition of soil moisture that is referred to throughout the report.

Definition of soil moisture

The soil moisture, noted S_m, is $\frac{1}{2.1}$ of the gravimetric content:

$$S_m = \frac{w}{2.1} = \frac{W_w}{W_s \cdot 2.1}$$

The objective of this whole procedure being to find a function that best characterizes the relationship between soil moisture content and sensors output voltage, a study of the possible interpolations of the data was carried out. The interpolation of the data has been done by means of the functions `polyfit` and `polyval` provided by `MATLAB`. On one hand, the red line on Fig10a is the line obtained by applying a linear regression to the data set. On the other hand, the red curve on the Fig.10b corresponds to a second degree interpolation of the data. The second curve appears to better fit the measurements carried out. The second degree interpolation was therefore preferred to the linear regression for the sake of accuracy.

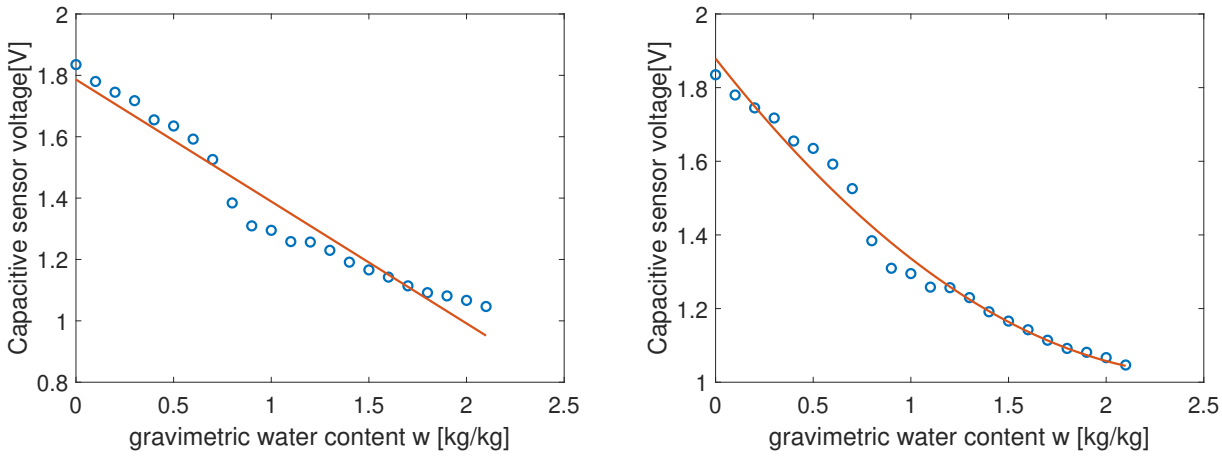

(a) Linear interpolation

(b) Interpolation of degree 2

Figure 10: Interpolation of the collected data

The whole control system of the *Pota'bot* is therefore based on the red curve in Fig.10b.
Relying on the chosen curve, the range of significant sensor output voltage is $[1.8788; 1.0443]$ [V]: above 1.8788 [V] the soil is considered to be completely dry, on the contrary under 1.0443 [V] is associated with a soil moisture content of 100%. The implementation of this relation is explained in detail in the Embedded Software PartIV of this report in the section 5.

Note:
Since the whole project is based on the measurement and control of the moisture content in the soil, the whole calibration procedure was carried out three times to ensure that it was as close to reality as possible. These three successive realizations of the procedure allowed also to maximize the chances of the control system working properly.
However, two realizations of the tests could have been enough (one before protection of the sensors and one after to check that their properties have not been modified). Nevertheless, the second procedure showed that the layer of waterproof spray (see section2.1.3) applied to the whole sensor completely prevented its reaction to soil moisture. This layer had to be removed and the calibration procedure repeated.

2.2 Water level sensor

2.2.1 Use

There is one water level sensor (divided in two parts) located in the water tank. It is used to detect a high level of water as well as a low one. Therefore, it can detect whether the tank is over or underfilled. The inclusion of a sensor of this type in the project was considered important as when the water tank is under-filled, the pump could be damaged by running dry.

There are three LEDs on the PCB which provide information about that level:

- Green : Everything is ok, the level is between *lvl_min* and *lvl_max*.
- Orange : The water level is above *lvl_max*. Pay attention, the tank could overflow.
- Red : The water level is below *lvl_min* and the pump might be pumping air. The tank must be filled

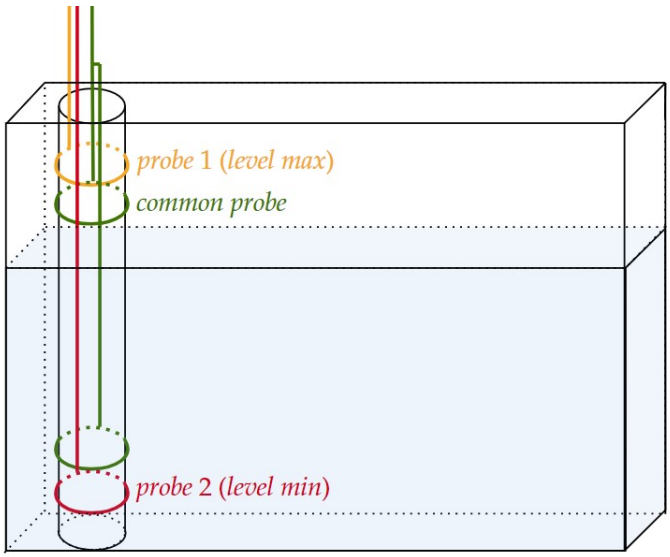

Figure 11: Practical design of the water level sensor

2.2.2 Practical design

The practical design of the sensor is represented in Figure 11. The sensors consist in a PVC tube around which four probes are wrapped at four different heights. The probes are directly connected to the PCB. Each pair {*probe 1, common probe*} and {*common probe, probe 2*} is a sensing part. The two *common probe* cables are connected to the same port on the PCB.

The tube is fixed with duct tape on a tank wall.

2.2.3 Working principle

The principle of the sensor is based on the difference of resistivity between air and water.

Material	ρ [$\Omega \cdot$ m]	σ [S/m]
Drinking water	2×10^1 to 2×10^3	5×10^{-4} to 5×10^{-2}
Air	1.3×10^{16} to 3.3×10^{16}	3×10^{-15} to 8×10^{-15}

Table 1: Table of resistivity and conductivity at 20°C extracted from [4]

As can be seen in Table 1, the resistivity of water is about 10^{14} times smaller than the one of air. Therefore, when two cables are in water, a current is able to pass between them through the water. While when they are in air almost no current is able to flow between them.

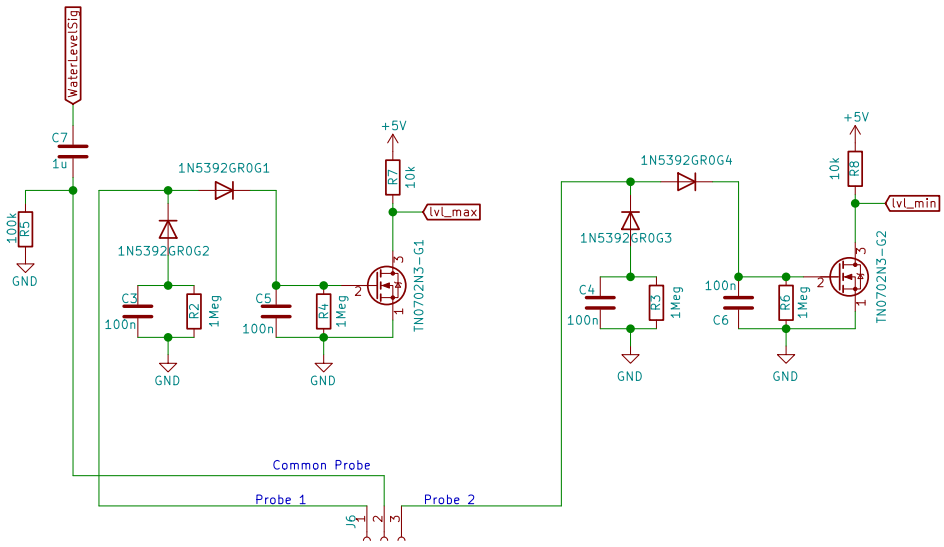

Figure 12: Water level sensor's circuit diagram

By looking at Figure 12, it can be seen that when *Probe 2* and *Common Probe* are both in water (see Figure 11) there is a connection through the environment which is water. Thus, the current flows and it provides a signal "0" at the input *lvl_min* of the microcontroller. However, to make it work, the n-channel MOSFET chosen (*TN0702N3-G* [7]) had to have an activation threshold below 1.7 [V] considering that the R_{water} induces a big voltage drop.

On the contrary, when *Probe 1* and *Common Probe* are both in air (see Fig.11) the connection between them is by air. But air is an insulator as can be seen in Table 1. Thus, the current flowing is almost 0 [A] and the threshold of 1.7 [V] is not reached at V_{GS} of the MOSFET and the input *lvl_max* of the MCU is set to "1" because no current flows through the resistor so there is no voltage drop.

Concerning the electrical circuit, the microcontroller sends a PWM signal *WaterLevel*, the capacitor C_7 is used to change this signal range to $[-2.5; 2.5]$ [V] instead of $[0; 5]$ [V].

Then the advantage of using this complex circuit compared to simple DC resistive test is that using AC signal allows to deal with probe corrosion. Indeed, thanks to the AC signal the current flows in both direction in the water. In fact, the two diodes allows this bi-directional flow. Thus, the electrolysis is done in both direction. Consequently, the net resulting corrosion of both probes is greatly decreased.

The corresponding LED will light up when the conditions depicted above are met. They are connected to the microcontroller through MOSFETs such that the current drawn comes directly from the power supply instead of the microcontroller (see Fig.13).

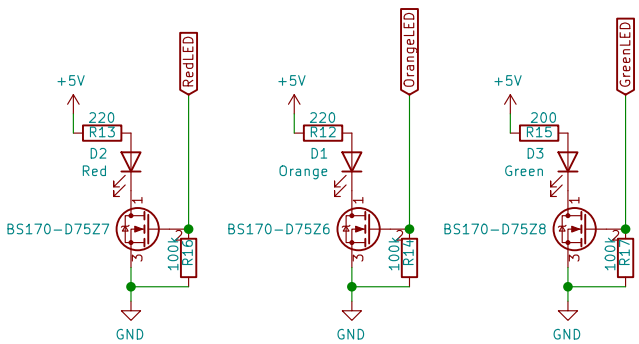

Figure 13: LED circuit

2.2.4 Calibration

For this sensor, the calibration amounts to fix the *lvl_min* and *lvl_max*. The *lvl_min* has been chosen in order to avoid pumping air, therefore it was fixed such that there is still 12 [l] in the tank under it. Considering the fact that the tap is not fixed in the bottom of the tank and that the pump is running with a flow rate of 7 [l/min], it seemed to be a good security. On the other hand, the *lvl_max* was set to a height such that the tank does not overflow when it is refilled to this level.

3 The actuators

In order to water the garden, two types of actuators are used: a pump and two electro-valves. As was done for the sensors, both actuators are presented in detail in this section.

3.1 Pump

3.1.1 Use

The pump is used to pump the water from the tank to the vegetable garden (see hydraulic circuit Fig.40). As can be seen in Fig.14, its flow rate is 7 [L/min] and the maximal pressure is 30 [PSI] $\approx$ 2 [bar]. It works with 12 [V] DC and can handle a maximum current of 4.5 [A].

Figure 14: Pump

3.1.2 Electrical circuit

In Figure 15, the electrical circuit to control the pump is shown. The activation of the pump is controlled with a relay which is used in a normally open configuration. When watering the garden is needed, the microcontroller sets the signal *PumpSig* to "1" which activates the MOSFET and thus allows the current to flow through the coil of the relay. Therefore, it triggers the switch of the relay which sets it in the closed configuration. The pump will then be activated.

In order to not have any troubles with a potential short-circuit or else the grounds from the 5 [V] and the 12 [V] are decoupled.

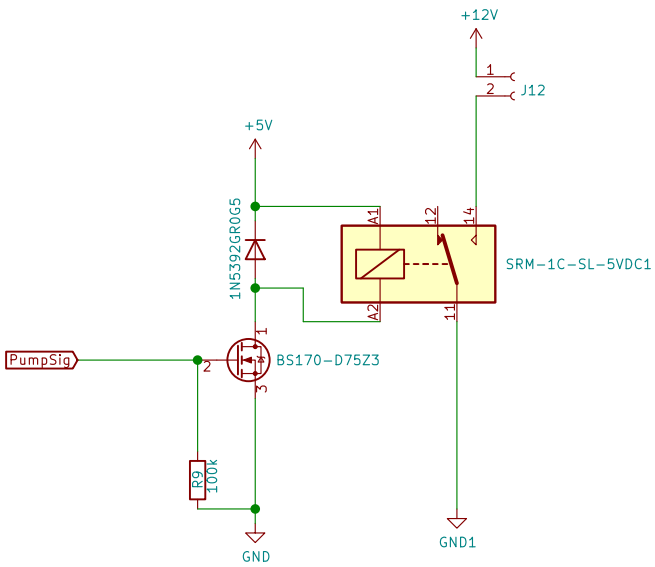

Figure 15: Pump's circuit diagram

3.1.3 Practical design

The pump had only very short cables, thus an extension of them was needed in order to be able to connect it to the PCB. The cables of a plug were used and soldered to the existing ones. The welds were then protected with heat-shrink sheaths.

3.2 Electro-valves

3.2.1 Use

Two solenoid valves are used in the scope of this project. As can be seen in [14], they can bare a pressure between 0.2 and 8 [bar]. Under the minimum limit, the water might not be able to go through the valve. Above the maximum limit, the valve might break. They are working with 230 [V] AC and a maximum of 32 [mA]. In the hydraulic circuit of Fig.40, they allow to choose which zone is watered. They can either be opened together or separately.

In order to avoid unnecessary energy consumption as well as damaging the valves, they were chosen normally closed. Indeed, the valves heat up very quickly and letting them energized for too long might damage them. Also, considering the small frequency of watering, they will be most of the time closed. Therefore choosing them normally closed seemed to be the most optimal choice. Furthermore, choosing them normally closed can prevent watering when it is not needed. However, to avoid having a huge pressure in the pipes and breaking the valves because of the pump running without any of the two valves open, the pump can only be turned on if at least one of the valves is open. This is explained in details in Part IV in Section 2.4.

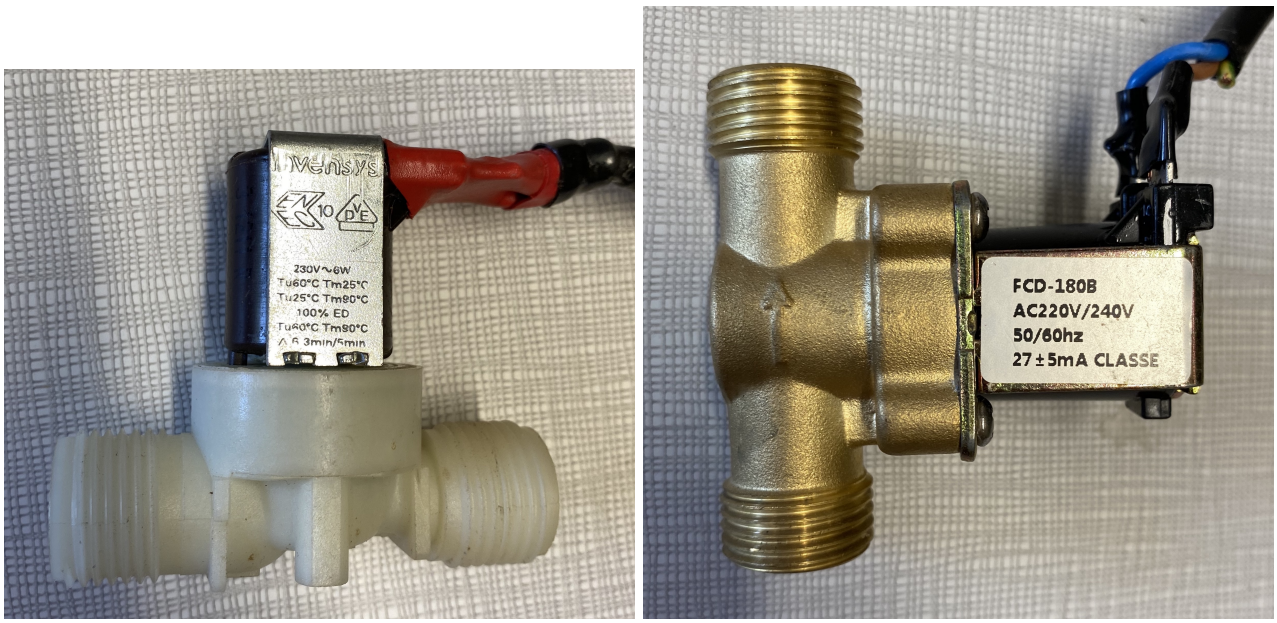

(a) (b)

Figure 16: Electro-valves

3.2.2 Electrical circuit

The inside of a solenoid valve is depicted in Fig.17. The valve consists of an electromagnetically inductive coil wrapped around an iron core. The iron core is located at the center called the plunger (in orange in Fig.17). In normally closed valves, the plungerreturn spring holds the plunger against the orifice and prevents flow. Once the solenoid coil is energized, a magnetic field appears which creates a magnetic attraction of the plunger, moving it and overcoming the spring force. Therefore, it enables the flow.

The electrical circuit controlling the valves is represented below in Fig.18. The principle of activation and deactivation for each valves is exactly the same as for the pump (see 3.1) and will thus not be explained here. The only difference is that the valves are working with 230 [V] AC.

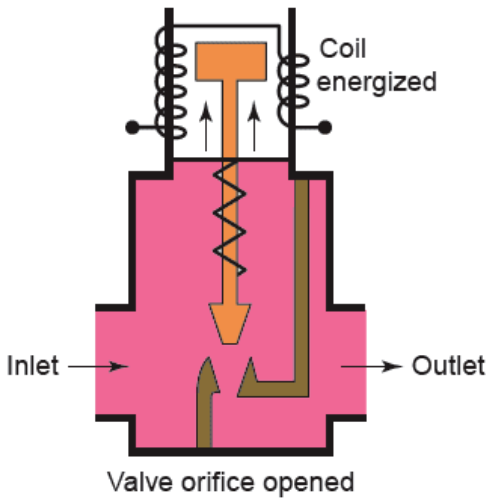

Figure 17: Solenoid valve principle

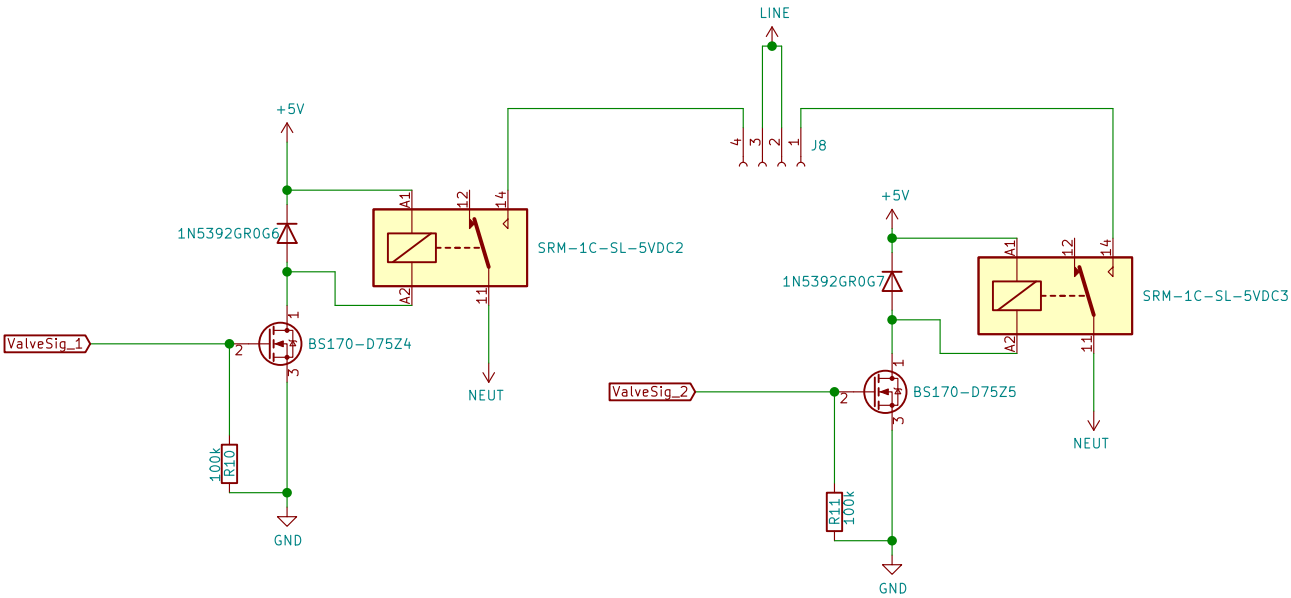

Figure 18: Valves circuit diagram

3.2.3 Practical design

To connect the valves to the PCB, some cables needed to be soldered either to existing one to extend them (white valve) or simply to the bare valve to connect it (gold valve). Once again some heat-shrink sheaths were used to protect the welds.

4 The user interface

The user interface is composed of three buttons and a LCD screen. The LCD displays the target as well as the current soil moisture in each one of the two zones (left and right denoted respectively by L and R) of the vegetable garden. The buttons are used to :

- UP : increments the reference humidity in the selected zone.
- $DOWN$: decrements the reference humidity in the selected zone.
- OK : validates the entered reference in the selected zone and changes the zone selected.

The interactions between the buttons and the LCD will be discussed in the software part.

The LCD circuit is represented in Fig.19a. There are 11 inputs to the LCD coming from the microcontroller and ruling the display of it. Its first pin is the ground of the LCD and is thus connected to the ground. Its second one is the source pin where the power source of the LCD is connected. A potentiometer RV_1 is connected to the third pin, named also the control pin, and is used to adjust the contrast on the screen. The others pin are use more technically for the display. The three first of these one can be distinguished of the eight others. The fourth pin is the register select pin and allows to switch from command mode to data mode. The fifth pin is named Read/Write pin and as its name indicate allows to write or read value on the screen depending of it receive a high or low value. The sixth pin is the enable pin and has to be helded high to perform read and write operations. The eight last pins are intended to host the instructions provided to the lcd and the binary code associated with the symbol displayed on it.

Concerning the capacitance C_8 and C_9, they are used to provide a smooth 5 [V] DC voltage and remove the noise gathered along the line. Therefore they are place as close as possible to the LCD power supply.

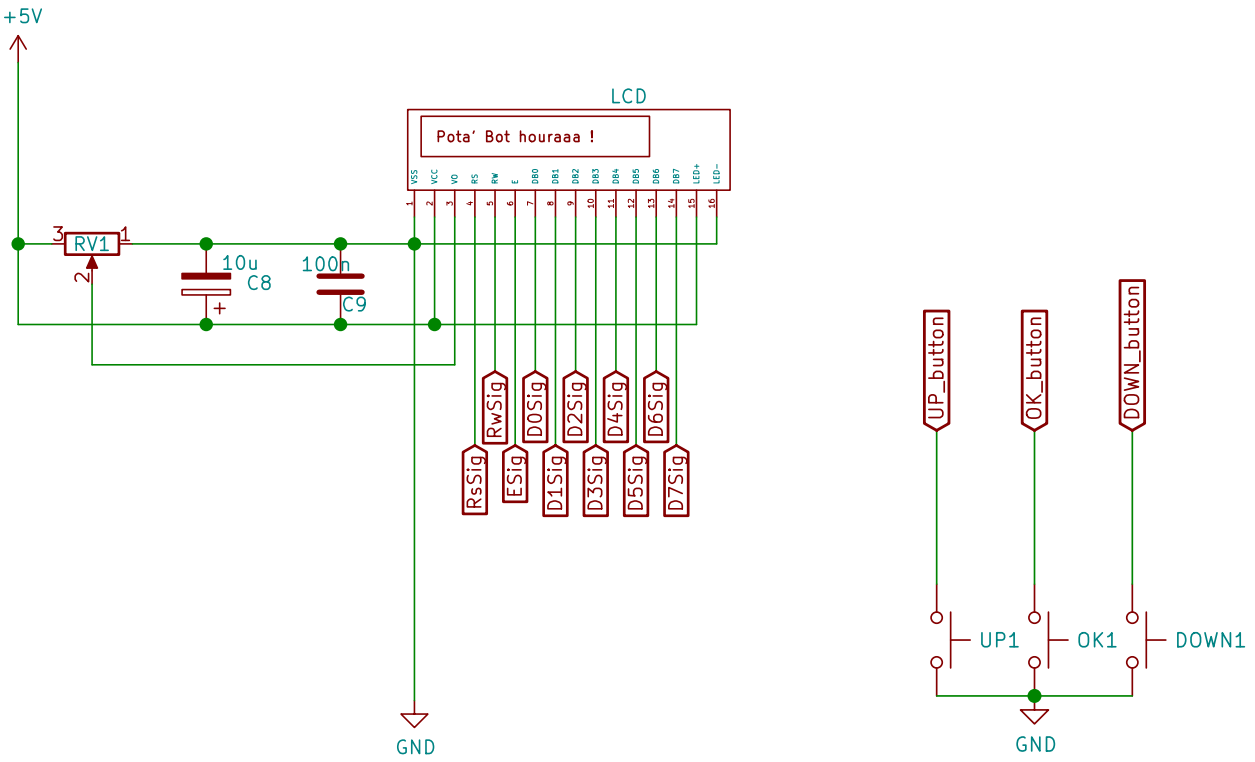

(a) LCD (b) Buttons

Figure 19: Circuit diagrams of the user interface

Finally, the buttons circuit is represented in Fig.19b. The principle is the following: each button is connected to a digital port of the microcontroller that is normally set to a high voltage of 5 [V], i.e. a "1" binary value. When pushed, the button connects it to the ground. Thus, it provides a "0" input to the microcontroller port where the button is connected.

5 The power supply system

The power supply system is divided into three voltage zones: 230 [V] AC, 12 [V] DC and 5 [V] DC.

The 230 [V] AC comes directly from the grid through a plug. It powers the electro-valves and goes through the 230 [V] AC - 5 [V] DC converter.

At the output of the *VTX-214-005* converter [1], there are two electrolytic capacitors. Their role is to get rid of the small ripples in the converter output signal. Thus, they provide a really smooth 5 [V] DC voltage for the microcontroller and the whole electrical circuit.
In the Fig.45, C_1 and C_2 are placed as close as possible to the microcontroller in order to remove the parasitic signals gathered along the line between the converter and the microcontroller.

The 12 [V] DC is generated by a converter connected to the grid. Indeed, a plug is connected to the 230 [V] AC of the grid and contains a 230 [V] AC - 12 [V] DC converter used for computer. It finally arrives to the PCB by a *Barrel Jack* connector [3]. This part of the power supply circuit is used to power the pump.

As explained in the section 3.1, the grounds are all decoupled to avoid any problems.

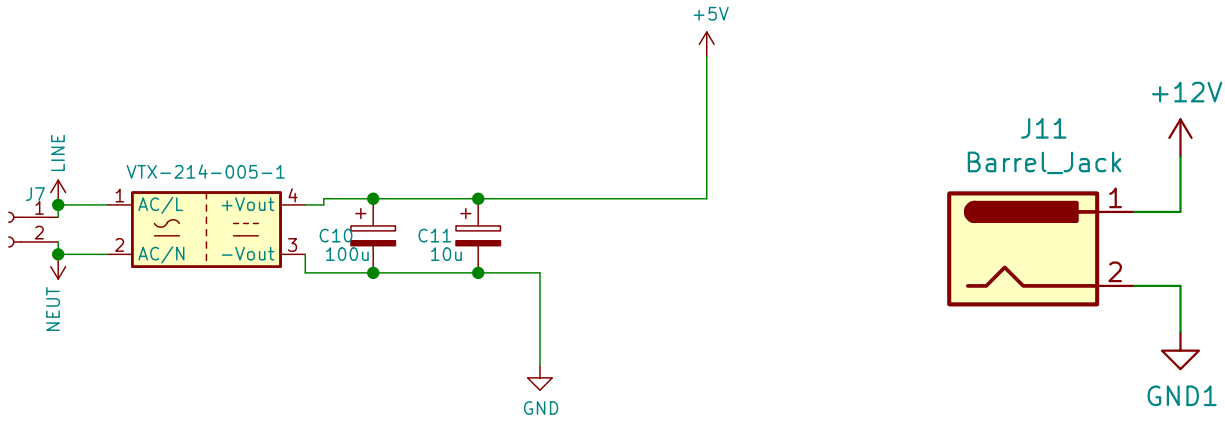

(a) 5 [V] (b) 12 [V]

Figure 20: Power supply's circuit diagrams

6 The design of the PCB

The PCB is separated into three zones corresponding to the three different voltages. They can be distinguished in Fig.21 by their track's width.

- 5 [V] DC : This part of the PCB corresponds to the biggest part of the electronic circuit. There is at most 1 [A] that can flow in this part of the circuit considering that it is the maximum output current of the converter. Nevertheless, the track's width is set to 0.5 [mm] with an isolation of 0.5 [mm] to ensure a heating smaller than 10°C.
- 12 [V] DC : This part of the PCB is only used for the pump power supply, involving the *Barrel Jack* connector, a relay and a terminal-block. Considering the maximal current of 4.5 [A] drawn by the pump, the track's width is set to 3 [mm] with an isolation of 0.5 [mm]to ensure a heating smaller than 10°C.
- 230 [V] AC : This part of the PCB is used for the valves and the converter. The maximal current drawn by this circuit is at most 200 [mA]. And considering that this part is at a 230 [V] voltage, a track's width of 2 [mm] with an isolation of 3 [mm] has been imposed to ensure an heating smaller than 10°C and a minimal perturbation on the electronic circuit.

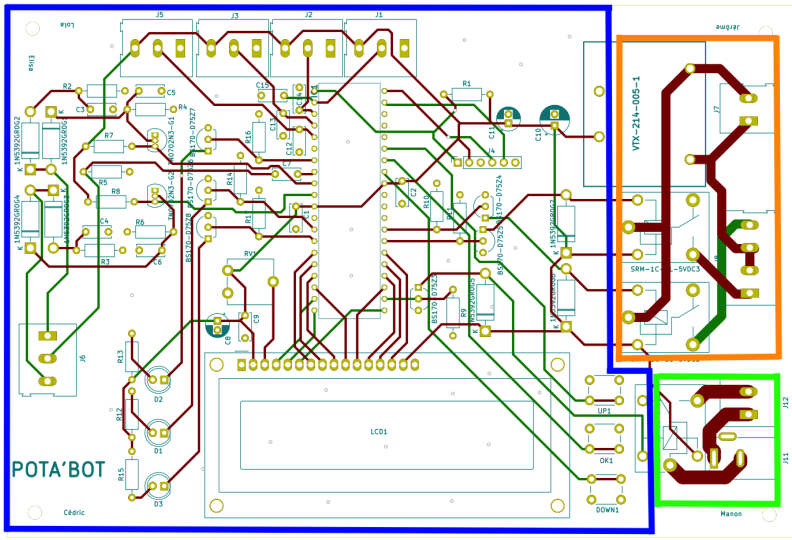

Figure 21: PCB tracks

There are two ground plans. One on the front layer and one on the bottom layer. Only part of the 5

[V] zone was included in them. It can be seen in Fig.22.

The ground plans were shaped in order to avoid as much as possible thin long parts which act like antennas. Some vias were put randomly as well to make the connection between the two ground plans. This design enables to reduce as much as possible the noise coming from the environment.

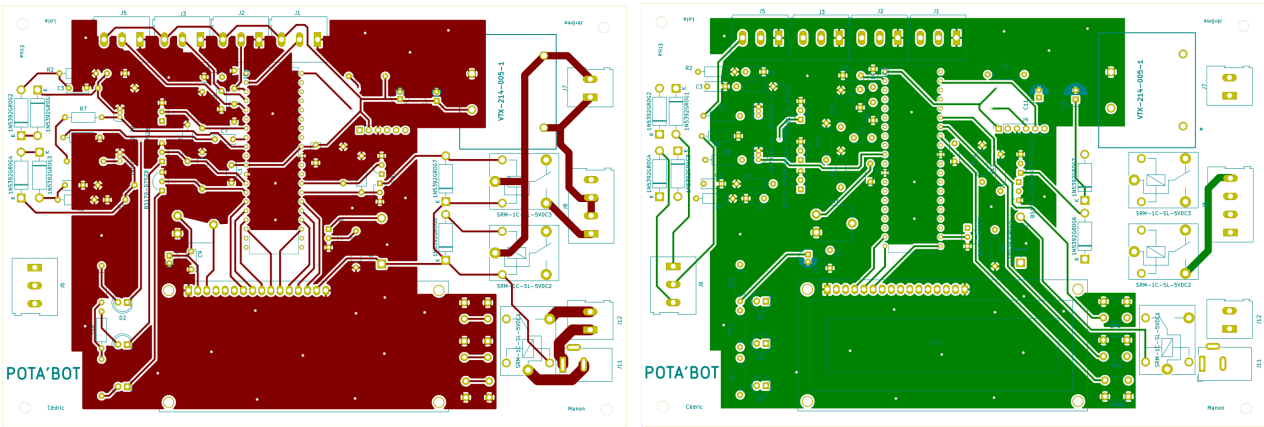

(a) Front copper layer (b) Bottom copper layer

Figure 22: PCB ground

The PCB was ordered at JLCPCB. Considering the fact that a voltage of 230 [V] runs on it, the design needed to be perfect in order to avoid damaging components or even ourselves when manipulating it afterward. Furthermore to avoid being electrically shocked by the 230 [V], some glue has been applied on the welds handling it.

The only small problem encountered, is an inversion in the output pin of the converter. Indeed the pin assignment chosen in the electrical circuit was not associated correctly in the footprint. However the problem has been easily solved by soldering the component on the back of the PCB. Indeed, the input of the converter being AC, there was no difference in inverting them.

6.1 Box design

The design of the box containing the PCB is done, but it is not printed in 3D yet. However here are some sketchs of its final configuration. It contains holes for the different inputs/outputs cables as well as for the LCD, the buttons and the LEDs.

(a) Closed (b) Open

Figure 23: Box for the PCB

Basically it will be separated into two parts, the bottom and the top. The PCB will be fixed on the bases of the bottom part with screws. The top will then be fixed to the bottom with screws and bolts. The whole box will be fixed to the garden box with screws as well.

Part III

Control system analysis and design

1 Introduction

As the aim of the Pota'bot project is to create an autonomous irrigation system for a small vegetable garden box, a control system must be implemented to monitor and control the moisture content of the soil Indeed, the soil moisture must be kept close to a reference level that corresponds to the water requirements of the plants in the garden. Therefore, the watering time of the system must be calculated according to the current and required soil moisture levels. Since the equations involved when considering water diffusion are non-linear and particularly complex, the watering control system to be implemented is simplified into a **compartment model**.

The goal is also to try to simulate a model really close to reality as experimentation of the whole system would take too much time and resources to reset the soil moisture each time and take the measurements again. For that purpose, many small experimental measurements have been made to improve the model reliability. These tests were done at small scales and in specific cases in order to avoid the problem of time consuming experimentation that is as explained not feasible with the time constraints of this project.

2 Starting model

2.1 Equations

To start with, the compartment model used consists of only two compartments. The first one corresponds to the surface of the vegetable garden soil and the second one corresponds to the depth of soil in which the plants are planted.

This model requires to make few assumptions:

- the concentration of water is constant in each compartment
- the transport of water between the compartments is driven by concentration differences

It is further assumed that, initially, water with concentration c_0 is injected in compartment 1 at a volume flow rate u. The volume flow rate u, plus any disturbances d, is therefore considered to be the input to the system. The concentration c_2 of compartment 2 is taken as the system output.

Let c_1 and c_2 be the concentrations of the water in the compartments and let V_1 and V_2 be the volumes of the compartments. The dynamics of the system can be obtained by keeping track of the inlet and outlet flows of each compartment. The mass balances of the compartments are :

$$\begin{aligned} V_1 \frac{dc_1}{dt} &= q(c_2 - c_1) - q_0 c_1 + c_0(u - d), \qquad c_1 \geq 0, \\ V_2 \frac{dc_2}{dt} &= q(c_1 - c_2), \qquad c_2 \geq 0, \\ y &= c_2, \end{aligned}$$

where q represents the volume flow rate between the compartments and q_0 represents the volume flow rate out of compartment 1 that is not going to compartment 2.

2.2 State-space representation

Introducing the variables $k_0 = \frac{q_0}{V_1}$, $k_1 = \frac{q}{V1}$, $k_2 = \frac{q}{V2}$ and $b_0 = \frac{c_0}{V_1}$ and using matrix notation($x = \begin{bmatrix} c_1 \\ c_2 \end{bmatrix}$ and $u = \begin{bmatrix} u \\ d \end{bmatrix}$), the state space model can be written as

$$\begin{cases} \dfrac{dx}{dt} = Ax + Bu \\ y = Cx + Du \end{cases} \qquad \begin{cases} A = \begin{bmatrix} -k_0 - k_1 & k_1 \\ k_2 & -k_2 \end{bmatrix}, \qquad B = \begin{bmatrix} b_0 & -b_0 \\ 0 & 0 \end{bmatrix} \\ C = \begin{bmatrix} 0 & 1 \end{bmatrix}, \qquad D = \begin{bmatrix} 0 & 0 \end{bmatrix} \end{cases}$$

Initially, the various parameters are set as follow:

- $q = 2.78 \cdot 10^{-8}$ [m^3/s]
- $q_0 = \frac{q}{5}$ [m^3/s]
- $V_1 = 0.2875 \cdot 0.997 \cdot 0.02$ [m^3]
- $V_2 = 0.2875 \cdot 0.997 \cdot 0.2$ [m^3]
- $c_0 = 1000$ [kg/m^3]
- $k_0 = \frac{q_0}{V_1} = 4.448 \cdot 10^{-6}$ [1/s]
- $k_1 = \frac{q}{V1} = 2.224 \cdot 10^{-5}$ [1/s]
- $k_2 = \frac{q}{V2} = 2.224 \cdot 10^{-6}$ [1/s]
- $b_0 = \frac{c_0}{V_1} = 800000$ [kg/(m$^3\times$ m^3)]

As a first crude estimation, the diffusion rate was determined using Darcy's law [3] but this value will be modified later in the practical implementation to have better model reliability.

Similarly, the evaporation rate q_0 was set to one fifth of q in order to have a starting point for the analysis of the system but it will be modified. The volumes of the two compartments correspond to the volume chosen for the garden box and will remain fixed. The value observed from the system $y = c_2$ correspond to the concentration in the second volume (i.e: the deeper volume).

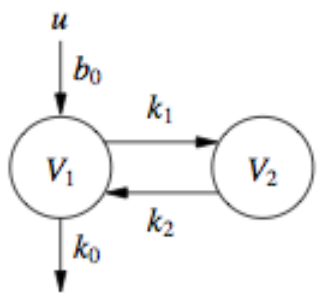

Figure 24: Schematic diagram of two compartment model

3 Experimental measurements

In order to improve the initial model that has been chosen with quite arbitrary parameters, some experimentation have been made. They are explained in the following sections.

3.1 Hydraulic Circuit Inflow

This test will affect the q parameter which correspond to the water input of the system. This is provided by the pump and the hydraulic system. The idea of this measurement was to activate the pump during a certain amount of time to collect in a container the water from the pipes. The same pipe length as what will be used for the final circuit has been used. Then, the quantity of water collected is measured by weighing it. These steps are depicted in Fig.25 in a more graphical manner.

[3] $Q = k \cdot s \cdot \frac{H}{h}$ where Q is the flow rate [m^3/s], k is the soil permeability, s is the section of the water column [m^2], H is the height of the water column [m] and h is height of the soil column [m]

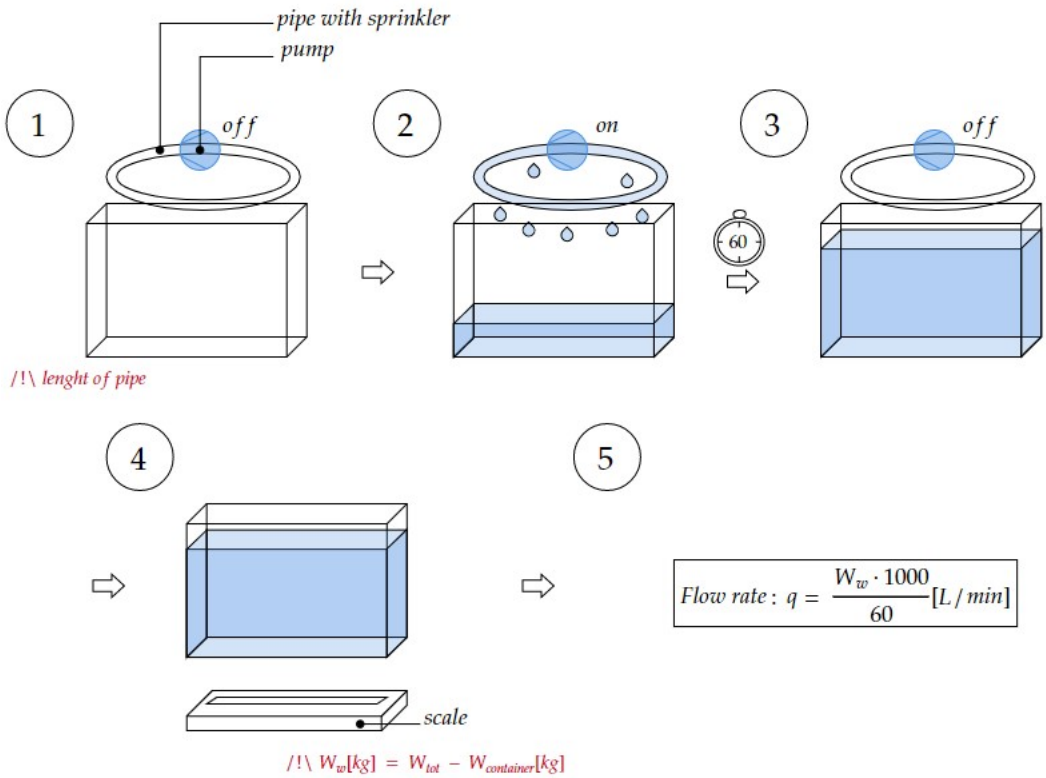

Figure 25: Main steps of the measurement

Finally, the inflow for the system is equal to 7 [L/min] which correspond to $1.1667 \cdot 10^{-4}$ [m^3/s]. This corresponds to the case when only 1 zone is watered at a time. It will be considered that if the 2 zones were to be watered, the inflow would be divided by 2 and thus be 3.5 [L/min]. It is verified in section 5.2 that both cases work.

3.2 Saturation of the Soil

An important parameter to know for the model is the quantity of water that needs to be added in order to saturate the soil. Indeed, it is considered that 100% of soil moisture correspond to the soil being saturated with water. On the other hand, 0% means that there is no water at all (i.e the soil is completely dry). This measurement will be used to go from a concentration to a percentage of soil moisture for the modelling in Simulink.

The method consist of drying completely the soil by using an oven. Once it is done, the soil is weighed before adding water. Then, water is added until saturation. Finally, the soil is weighed again and the weight difference gives the quantity of water needed to saturate the soil. This experiment has been carried out during the procedure of calibration of the sensor explained in part II section 2.1.4.

These steps are depicted in figure 26 in a more graphical manner.

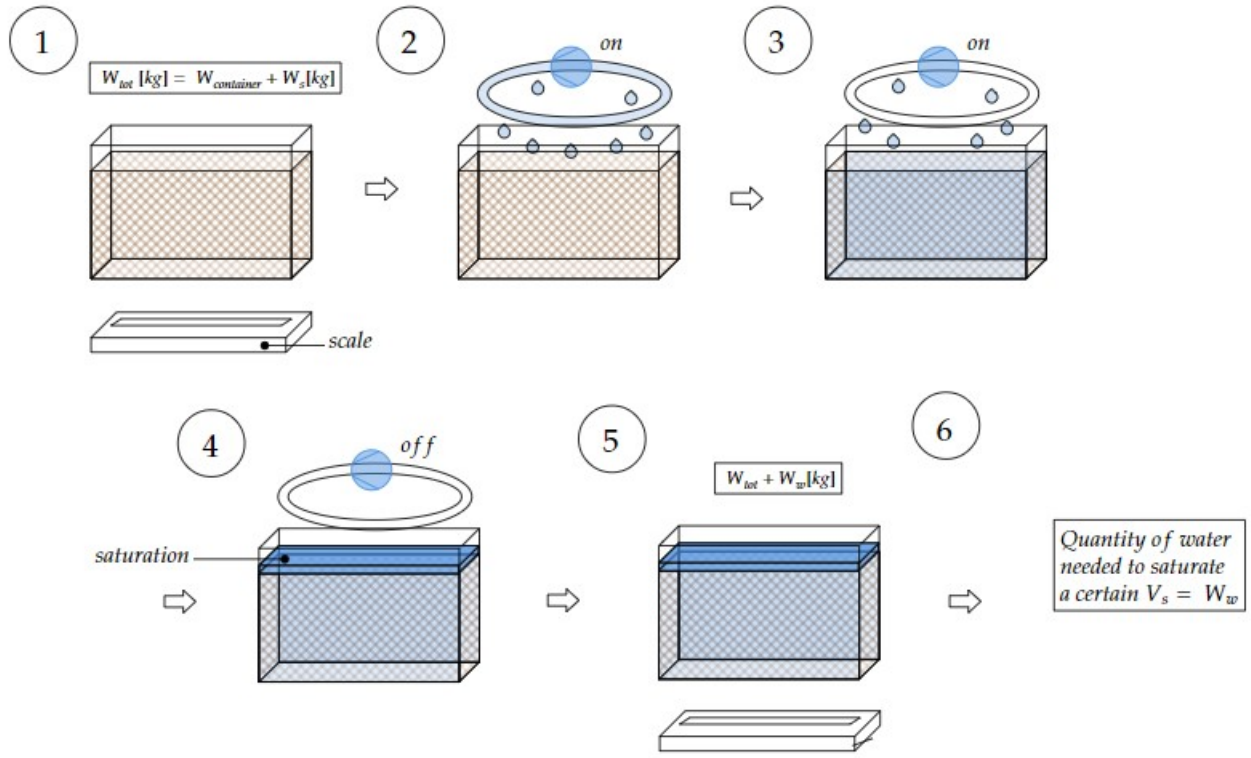

Figure 26: Main steps of the measurement

In terms of concentration, the maximum concentration of water before saturation is equal to 435 [kg/m^3].

3.3 Penetration Rate of Flow in the Soil

The penetration speed of the water in the soil is also an important parameter of the model to take into account. Nonetheless, it was quite complicated to design a correct experiment to measure this penetration flow.

The experiment that has been conducted consists of pouring a certain amount of water in the soil. Then the time it takes to reach the bottom of the box containing the soil is measured. The penetration speed can now be computed. Then, the rate of flow can be obtained by multiplying this speed by the section of the box. Denoting v the penetration speed, A the box section and f the penetration rate of flow:

$$f\ [\mathrm{m}^3/\mathrm{s}]\ = v\ [\mathrm{m/s}]\ \cdot\ A\ [\mathrm{m}^2] \tag{4}$$

In our case, the penetration speed was measured and was such that:

$$v = 0.005\ [\mathrm{m/s}] \tag{5}$$

The section of the box is:

$$A = 0.2875\ \cdot\ 0.997 = 0.2866\ [\mathrm{m}^2] \tag{6}$$

From that the penetration rate of flow that will be used for the more reliable model can deduced. This represents the quantity of water that cross a section of the soil per second.

$$f = 0.0014331875 \approx 1.433\ \cdot\ 10^{-3}\ [\mathrm{m}^3/\mathrm{s}] \tag{7}$$

And finally, the value computed in (7) will be used in the simulations to design the PID.

3.4 Voltage and soil moisture relation

Following the soil saturation test, something quite important for this project is to be able to calibrate the sensors for the different soil moisture levels. The procedure of this test was explained in part II section 2.1.4. The only difference is that the simulations use the concentration expressed in [kg/m^3] and so the curve used is shown in figure 27. This approximation will be useful for the Simulink simulations.

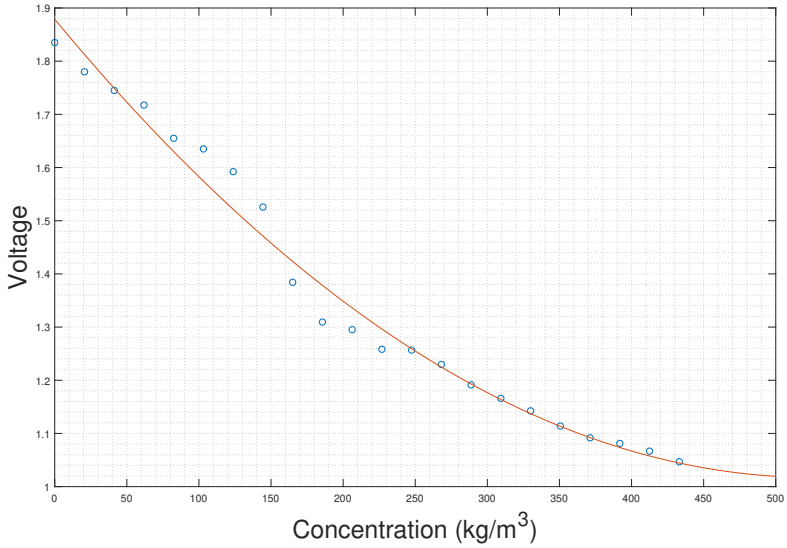

Figure 27: Approximation of sensor function

3.5 Evaporation speed

The last evaluated parameter for the realistic model was the speed of evaporation of the water. This will be done by putting a certain amount of water into the soil. Then let some time elapse. The mass of the soil is taken at those 2 times and then the difference correspond to the mass that has evaporated. Mathematically, this gives:

$$m_{water} = m_{time_2} - m_{time_1} \tag{8}$$

Converting this mass into a volume by dividing it by $\rho = 997$[kg/m^3]. And then, dividing by the elapsed time would give the evaporation rate of flux. Finally, the value taken for the model is $1.3888 \cdot 10^{-7}$[m^3/s] or about $\frac{1}{10000}$ of the water penetration rate f .

4 Final model

4.1 Parameters Change

So now all the necessary experiments are done, the parameters and the state space representation of the model can be updated. These updated parameters are:

- $q = 1.4333 \cdot 10^{-3}$ [m^3/s]
- $q_0 = 1.3888 \cdot 10^{-7}$ [m^3/s]

Also, the input parameter u is either 0 or $1.1667 \cdot 10^{-4}$ because the pump is either on or off.

The new state space representation of the system is thus:

$$\begin{cases} A = \begin{bmatrix} -k_0 - k_1 & k_1 \\ k_2 & -k_2 \end{bmatrix}, \qquad B = \begin{bmatrix} b_0 & -b_0 \\ 0 & 0 \end{bmatrix} \cdot 10^5 \\ C = \begin{bmatrix} 0 & 1 \end{bmatrix}, \qquad D = \begin{bmatrix} 0 & 0 \end{bmatrix} \end{cases}$$

and with the numerical values it gives:

$$\begin{cases} A = \begin{bmatrix} -0.2000194 & 0.2 \\ 0.025 & -0.025 \end{bmatrix}, \qquad B = \begin{bmatrix} 1.39549 & -1.39549 \\ 0 & 0 \end{bmatrix} \\ C = \begin{bmatrix} 0 & 1 \end{bmatrix}, \qquad D = \begin{bmatrix} 0 & 0 \end{bmatrix} \end{cases}$$

This will be the system used in Simulink.

4.2 System in Simulink

Here follows the practical implementation of the model into Simulink. There are numerous parts in this scheme which are explained below:

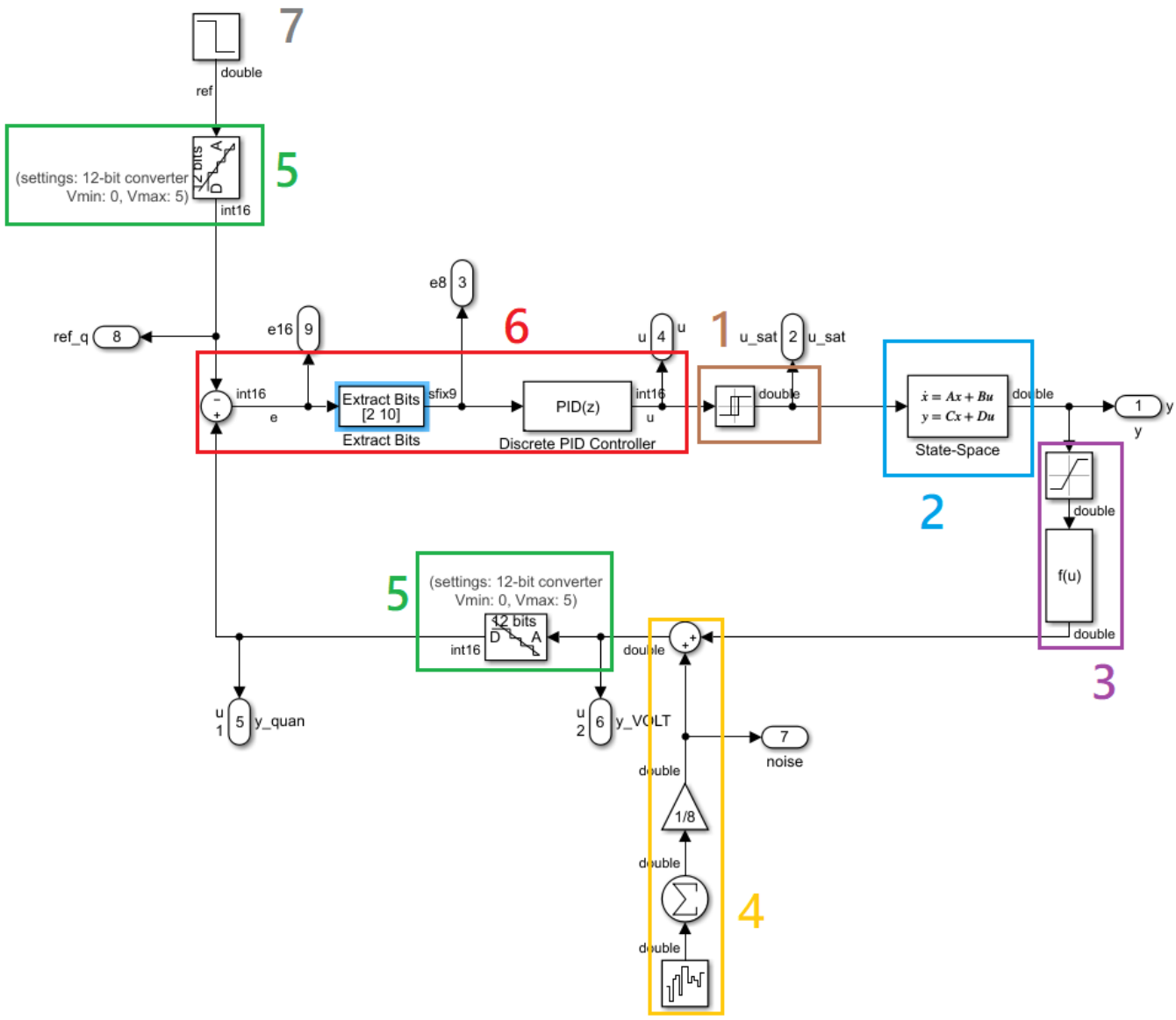

Figure 28: Simulink system

4.2.1 Pump Saturation

This part of the scheme corresponds to the fact that the actuator is a pump which is whether on or off. So this block activates the pump to a constant flow rate if the output of the discrete PID is above a given threshold.

In fact, in the real system, it also opens the corresponding valve to water the zone.

4.2.2 Model State-Space

This block contains the model described above with the updated parameters. This is one of the most important block in order to simulate correctly the real system.

4.2.3 Soil moisture to Voltage

These two blocks are related to the soil moisture sensors. There is a saturation block because the sensors have a minimum and maximum voltage in relation with the moisture of the soil. This relation has been made thanks to experimental measurements.

From these, the real function of the sensor is approximated by a 2nd order polynomial and this polynomial is embedded in a block.

4.2.4 Noise Average

This set of blocks corresponds to the soil moisture sensors noise. In fact, the mean of 8 generated white gaussian noise is taken. Practically, four measurements are taken on the two soil moisture sensors of a zone. So, taking the mean of these 8 signals is the same as taking the mean of the 8 white gaussian noise signals and add it to the original signal. This average is then added to the original signal before being converted into a binary value.

The amplitude of the base noise is set to be around 40 [mV].

The only difference with the practical implementation is that the mean is done with *double* numbers. While in the microcontroller, the mean is done with *binary* numbers. Nonetheless, it doesn't change much the results.

4.2.5 Analog to Digital Conversion

These blocks in the Simulink simulation are just there to convert *double* numbers into *binary* values on 12 bits. They simulate the role of the ADC in the PIC microcontroller. Indeed, values from sensors are converted into *binary* values to compute the error. Note that the reference is stored also as a *binary* value but it was easier for the simulations to have to specify it in volts.

4.2.6 PID Control

This part correspond to another very important set of blocks for the control: the PID.

First, the error is computed a bit differently than usual as: measurement - reference. Referring to figure 27, the relationship between humidity and voltage shows that the function is decreasing. Consequently, instead of taking the error as:

$$error[k] = ref[k] - measurement[k]$$

The error chosen is:

$$error[k] = measurement[k] - ref[k]$$

Indeed, if the voltage measured is lower than the specified voltage reference, it means that the soil moisture is higher than the soil moisture reference. So by computing the error as explained, it allows to have negative error when the soil moisture is too high and positive error when the soil moisture is too low.

Secondly, 9 bits are selected from the 16 bits error in order to keep the output of the PID on 16 bits. This choice has been made by looking at the maximum possible error that could occur in the system. From there, the 8 following bits are selected + 1 extra bit for the sign[4].

[4] Numbers are represented in 2's complement

Finally, the PID block is inserted, taking 9 bits as error input and the output is the activation value on 16 bits. Actually, the PID is a PD controller but this will be explained further.

Inside of the PID in Simulink, the output $u[k]$ is computed as follows:

$$\begin{aligned} u_p[k] &= K_p \cdot error[k] \\ u_i[k] &= u_i[k-1] + K_i \cdot Ts \cdot error[k] \\ u_d[k] &= \frac{K_d}{Ts} \cdot (error[k] - error[k-1]) \\ u[k] &= u_p[k] + u_i[k] + u_d[k] \end{aligned}$$

the sampling period Ts is taken to be equal to 1 [s]. Indeed, it is not wanted to have a high frequency control. In fact, if the pump were to be activated, it can't be turned on and off at high frequency so 1 [s] is a good compromise and will work just fine.

The equations become:

$$\begin{aligned} u_p[k] &= K_p \cdot error[k] \\ u_i[k] &= u_i[k-1] + K_i \cdot error[k] \\ u_d[k] &= K_d \cdot (error[k] - error[k-1]) \\ u[k] &= u_p[k] + u_i[k] + u_d[k] \end{aligned}$$

In those equations, *error* is on 9 bits, K_p, K_i and K_d are on 8 bits and u, u_p, u_i, u_d are on 16 bits.

4.2.7 Reference Signal

This part is just the varying reference of the system expressed in volts. This will be used in order to analyze the behaviour of the system for different sets of parameters.

5 Realistic simulations

In this section, the 3 parameters K_i, K_d and K_p are modified in order to find values that work well.

The test consists in fixing a starting moisture level homogeneously in the soil. Then, after $1.2 \cdot 10^4$ seconds the voltage reference changes from 1.3 [V] to 1.1 [V] corresponding to 51.7% and 83.5% of moisture respectively. In terms of concentration it is 225 [kg/m^3] and 363.4 [kg/m^3] respectively.

Afterwards, the most promising parameters will be analyzed. Indeed, those parameters should be compliant to other constraints than just a nice test case output.

The last parameter to be tuned is the threshold level for the activation of the pump. The effect of this parameter will be shown for a set of PID parameters and the best behaviour will be conserved.

5.1 Sets of parameters

In order to conduct the search of the best parameters, three starting points will be chosen. The set of PID parameters (K_p, K_i, K_d) are such:

- (5, 0, 1)
- (1, 1, 1)
- (2, 0, 0)

This set of parameters allows to obtain knowledge of the global effect of the different effects in order to know on which to focus and how to calibrate the proportions between parameters.

The different values tested for the saturation block are 0, 25 and 75. Notice that the results will be plotted on the volume V_2 where the measurements are taken.

5.2 Parameters Tests

The results of the tests conducted are depicted in Figure 29. From these results, the necessary parameters can be deduced. Indeed, from figure 29b, one can see that the integrative action causes a very high overshoot that is not acceptable for this project.

In fact, the integrative action couldn't improve much the performance as it can be seen from figure 29a and 29c that good precision can be achieved simply with proportional and derivative action.

Then from Figure 29c, it can be seen that having only a proportional action with a threshold to 0 gives relatively good precision. In addition, increasing the threshold too much induces a kind of a static error.

Finally, it can be seen in Figure 29a that the output with the threshold equals to 25 is quite accurate. Actually, it is mainly the fact that $K_p = 5$ that gives good precision but the derivative action still plays a role in the control when there is a big reference change.

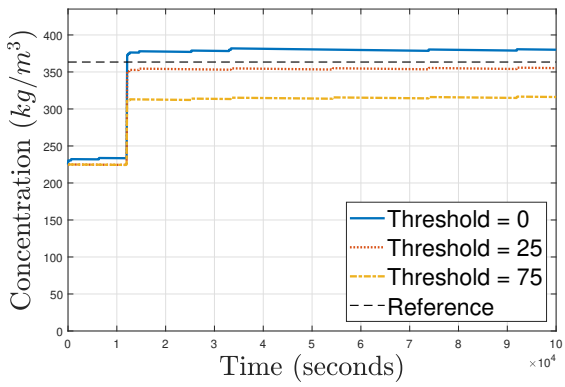

(a) Test for $K_p = 5$, $K_i = 0$ and $K_d = 1$

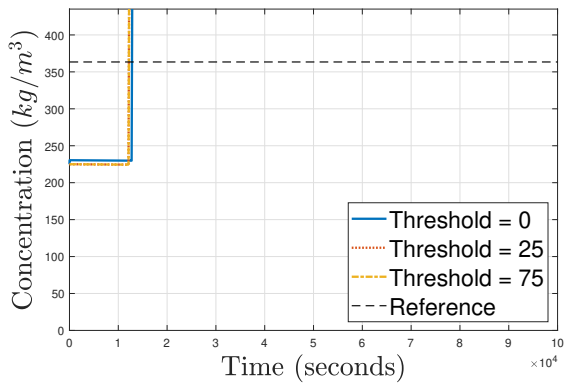

(b) Test for $K_p = 1$, $K_i = 1$ and $K_d = 1$

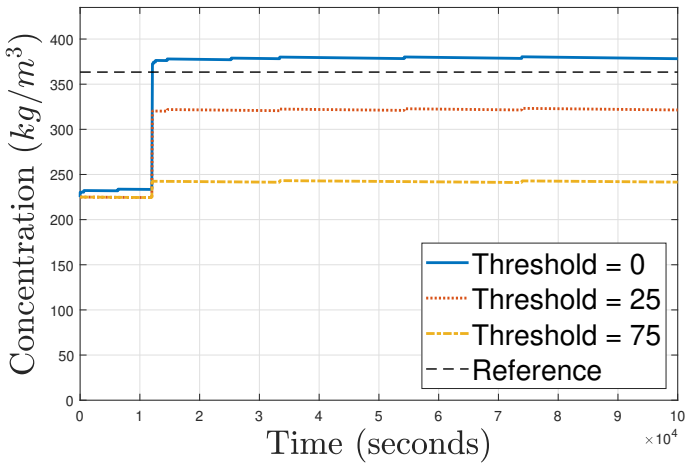

(c) Test for $K_p = 2$, $K_i = 0$ and $K_d = 0$

Figure 29: Control Simulation Tests

From this first test, the parameters chosen to be investigated are $K_p = 5$, $K_i = 0$, $K_d = 1$ and threshold $= 25$. In addition, the static error that remains for this case is $\approx 2.3\%$ of humidity, which is perfectly acceptable in the scope of this project. However, by decreasing the threshold to 15, the static error drops to $\approx 0.7\%$ of soil moisture error which is theoretically very good for this project.

The last test to verify the parameters of the controller is to increase the reference as before and then decrease it again to see how it behaves. So the soil moisture will go from 225 [kg/m^3] and 363.4 [kg/m^3] after $1.2 \cdot 10^4$ seconds and then to 345 [kgm^3] at $t = 10^5$ [s]. The result is shown on figure

30. The soil moisture is kept quite correctly at the reference so the parameters chosen will be used practically in the implementation.

One thing to notice though is that, when changing from a high soil moisture to a lower soil moisture reference, the system is highly dependant on the external weather conditions concerning the speed at which the soil moisture will decrease. This is because the only possible action on the system is to water it. So, the controller can only increase soil moisture but not decrease it.

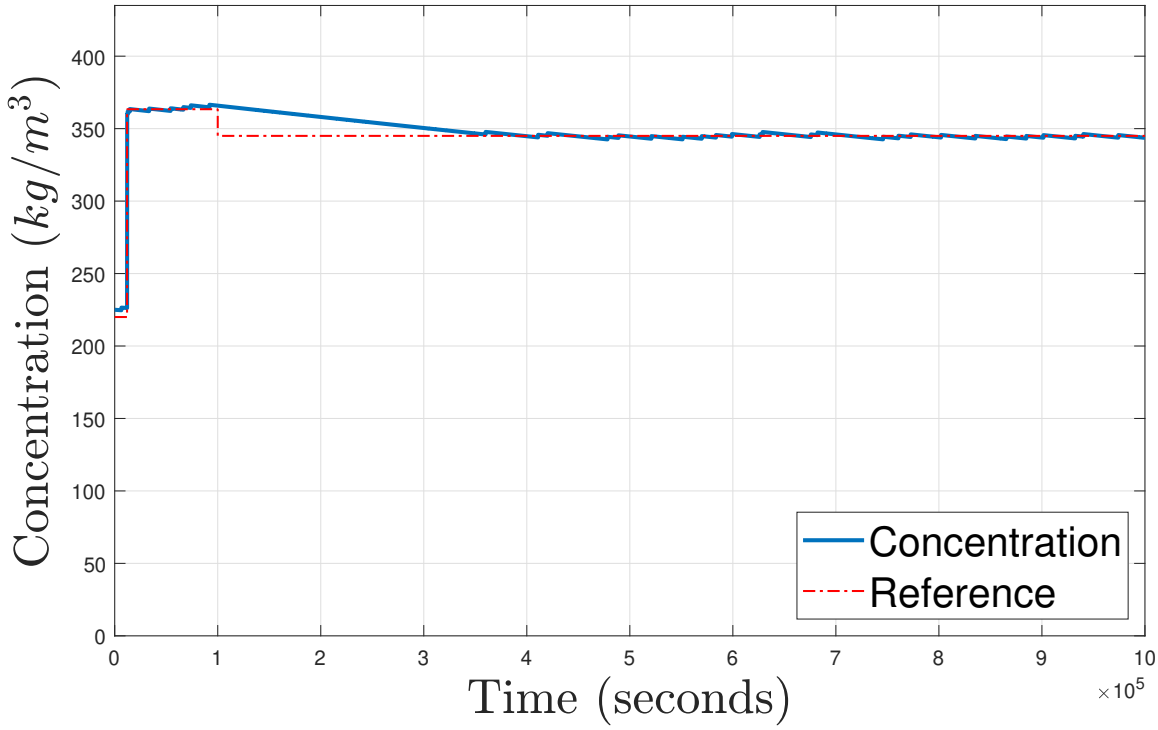

Figure 30: Multiple reference change test

The previous tests were in the case the pump give full flow to only one zone. Now, considering the two zones are watered at the same time, the flow of the pump per zone is roughly divided by two. So that $q = 3.5$ [L/ min] $= 8.3335 \cdot 10^{-5}$ [m^3/s]. The results are shown in figure 31 and it is quite satisfying as well, it doesn't change much compared to figure 30. Thus the parameters won't be impacted by the reduced flow of the pump when both zones need to be watered.

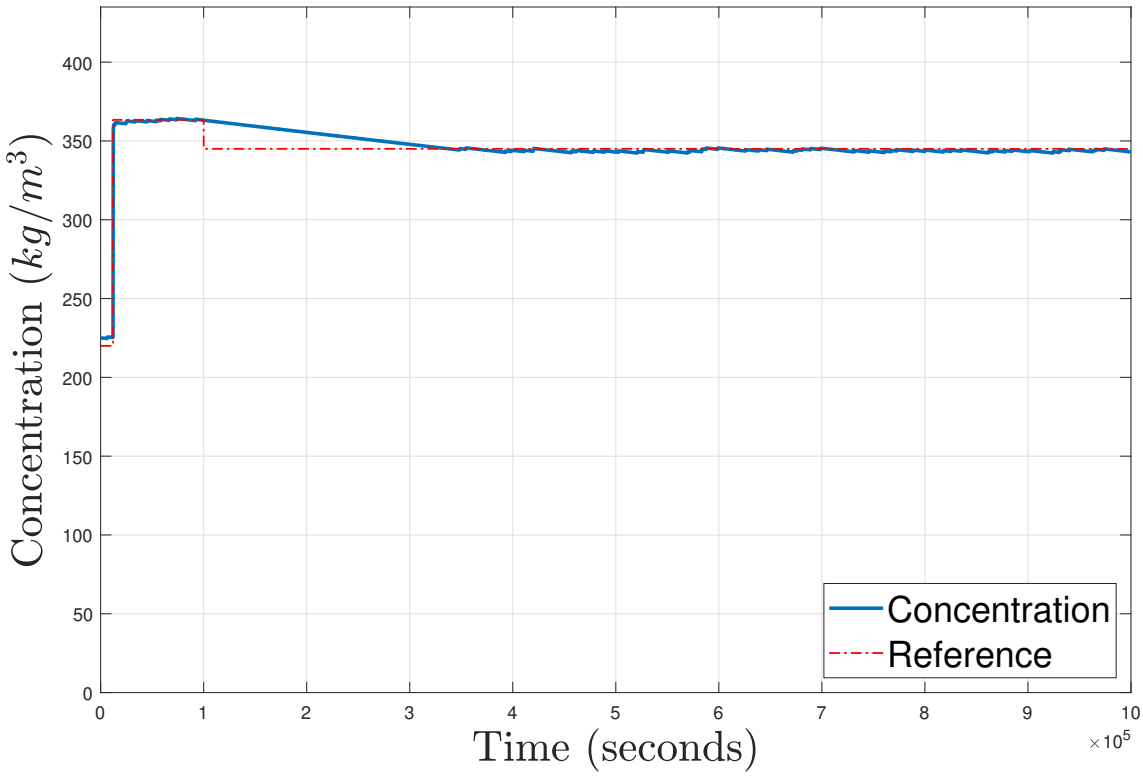

Figure 31: Multiple reference change test with reduced flow

The next step will be to verify that the PID behaves as wanted in the real world.

5.3 PID parameters

In conclusion, the structure of the PID is such that:

$$u[k] = K_p \cdot e[k] + K_d \cdot (e[k] - e[k-1]) + (u_i[k-1] + K_i \cdot e[k])$$

Referring to the simulations of the previous section, the best parameters for this project seem to be :

PID Summary

PID parameters:

$K_p = 5$ | $K_d = 1$ | $K_i = 0$ | $threshold = 15$

PID discrete form:

$$u[k] = 5 \cdot e[k] + e[k] - e[k-1]$$

Part IV
Embedded software design

This part of the report is devoted to the design of the embedded software. In the first place, a comprehensive description of the tasks that the software must perform is provided. From the characteristics of these tasks, the most suitable software architecture to be used can be deduced. In addition, an explanation is provided of how the signals returned by the capacitive soil moisture sensors are processed and interpreted in the software. The practical implementation of the designed software is done in XC8 [9] assembly language for PIC microcontroller. As a reminder, the microcontroller used in this project is the 40-pin *PIC16(L)F1789* [11].

1 General description of the software

The role of the software in this project is to implement on the microcontroller a system that controls the automatic watering of the vegetable garden box. The general description of the tasks to be performed by the software can be found in Section 2 of the report.

2 Inventory of the tasks

Based on the general description of the software, an inventory of the tasks to be performed by this software can be made. As the system is very slow overall, it is not necessary to know the execution times precisely. This is why the execution times given for each task are upper bounds. The microcontroller has been set to a clock rate of 4 [MHz]. An instruction takes 4 to 8 clock ticks to execute. Thus, 1 to 2 [μs] are needed to execute an instruction in the microcontroller. Therefore, counting the number of instructions in each task allows to have an approximation of their execution times.

2.1 Task τ_1: Water level sensor check

This task interprets the signals sent by the water level sensor. If the signal received indicates that the water level in the tank is lower than *min_level*, a red LED is lit and the *WL flag* is set to 1. If the water level in the tank is between the *min_level* and *max_level*, then a green LED is lit and the *WL flag* is set to 0. If the water level is above the maximum level, an orange LED is lit and the *WL flag* is set to 0 as well. The orange LED is thus only an indication for the user that the tank can overflow. The operation of this task is summarized in the diagram below:

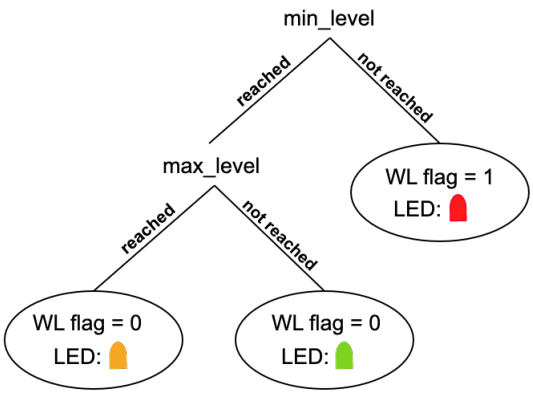

Figure 32: Water level task

Period and execution time of τ_1	
Period: $T_1 = 520$ ms	**Execution time:** $C_1 \leq 52$ μs

2.2 Task τ_2: AD conversions and PID controller of zone 1

In order to convert the analog signals returned by the capacitive soil moisture sensors into binary numbers readable by the microcontroller, an analog-to-digital conversion must be done on each of the microcontroller ports that are connected to the sensors in zone 1. If V_{n-BIN} is the digital voltage resulting from the n-bits AD conversion of the analog voltage V_{OUT} returned by a soil moisture sensor, then the following relationship between V_{n-BIN} and V_{OUT} can be written

$$V_{n-BIN} = \frac{V_{OUT} - V_{SOURCE-}}{V_{SOURCE+} - V_{SOURCE-}} \cdot 2^n \tag{9}$$

where $V_{SOURCE+}$ and $V_{SOURCE-}$ represent the positive supply voltage and the negative supply voltage of the microcontroller, i.e. $V_{SOURCE+} = 5$ [V] and $V_{SOURCE-} = 0$ [V]. Since the range of values returned by the capacitive soil moisture sensors is smaller than the 5 [V] supply, it was chosen to perform the conversion on 12 bits because this is the highest precision that can be achieved with the PIC16f1789 microcontroller. The 12-bit conversion allows an accuracy of ≈ 0.5 [mV] according to (9).

As the sensor signals are contaminated with noise even though some precautions were taken by using decoupling capacitances, it was found that a single analog-to-digital conversion per sensor was not sufficient to obtain an accurate current soil moisture value. Therefore, each time this task is called, a burst of four analog-to-digital conversions is initiated for each of the sensors in zone 1. This conversion burst yields eight binary values representing the signals returned by the two sensors. These binary values are then averaged to obtain a single voltage signal being the image of the amount of moisture in the soil in the area.

This measurement is then compared to a binary reference by the PID controller of the zone which sets to one the *PID1 flag* if zone 1 is to be watered.

Period and execution time of τ_2	
Period: $T_2 = 1.04$ s	**Execution time:** $C_2 \leq 1$ ms

2.3 Task τ_3: AD conversions and PID controller of zone 2

This task performs the same operations as task τ_2 on zone 2 of the vegetable garden. Two separate tasks have been created because each of the two zones must be managed independently since they have totally independent soil moisture references and current soil moistures.

The PID controller of the zone sets the *PID2 flag* to one if zone 2 is to be watered.

Period and execution time of τ_3	
Period: $T_3 = 1.04$ s	**Execution time:** $C_3 \leq 1$ ms

2.4 Task τ_4: Pump activation and valve opening

This task receives instruction signals from tasks τ_1, τ_2 and τ_3 from which it deduces whether it should activate the pump and open one or both valves. First, the task has to check whether the signal sent by the water level sensor indicates that the water level is too low. If this is the case, the pump cannot be activated as it may be damaged. In case the water level is above the minimum level, the task has to look at the signals sent by the PID controller of each zone. Thus, this task gives the order to open the valve(s) and activate the pump if the signals returned by the PID controllers tell it to do so. The diagram below shows the logic of the activation task:

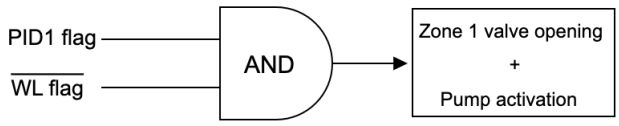

(a) Zone 1 activation

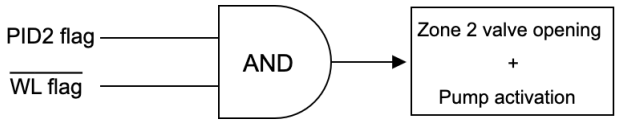

(b) Zone 2 activation

Figure 33: Logic of the activation task

where *PID1 flag* and *PID2 flag* are flags that are updated by the zone's PID task and *WL flag* is a flag that is updated by the water level sensor task.

Period and execution time of τ_4	
Period: $T_4 = 520$ ms	**Execution time:** $C_4 \leq 60$ μs

2.5 Task τ_5: Acquisition of the AD conversion data for display on the LCD screen

This task consists of recovering the average value of the eight analog-to-digital conversions that were done in tasks τ_2 and τ_3. This task then links this voltage value to a percentage of moisture in the soil that can be displayed on the LCD screen. The link between the voltage and the percentage of moisture in the soil is made by means of look-up tables whose implementation is explained in Section 5.

Period and execution time of τ_5	
Period: $T_5 = 1.56$ s	**Execution time:** $C_5 \leq 70$ μs

2.6 Task τ_6: Dealing with the bouncing effect in buttons

A button is made up of two metal plates that come into contact when the button is pressed. The contact between these metal plates is not instantaneous. This results in the multiple triggering of the button, as if the button was pressed several times. This phenomenon is called the bouncing effect. It is represented in the figure below.

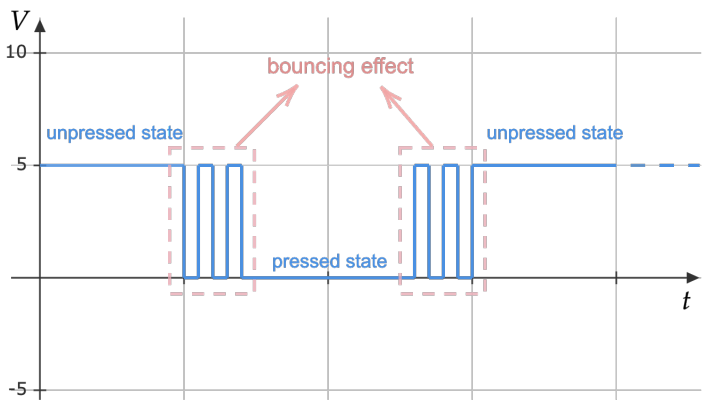

Figure 34: The bouncing effect

From Fig.34, it is clear that during the bouncing effect, the state of the button is not stable. Thus, a button must be considered pressed or unpressed only when its state is stabilized. The debouncing task is managed by the software program. It consists of periodically checking the status of a button. If during four consecutive calls of the task the button is in the pressed position (i.e. at 0 [V]), then the program considers that the button is in the pressed state. If not, the program considers that the button is in the unpressed state. Thus, counting four low values to consider that the button is pressed allows to neglect the bounces. This task must be carried out at regular intervals and has a negligible execution time. This is why it is implemented in an interrupt routine.

Period and execution time of τ_6	
Period: $T_6 = 4.1$ ms	**Execution time:** $C_6 = \epsilon$

2.7 Task τ_7: Display soil moisture data on the LCD screen and buttons value check

This task displays on the LCD screen the soil moisture percentages of each zone. These percentages were obtained in the τ_5 task. This task shall also display the target soil moisture value for each of the zones. This value is encoded by the user by means of buttons. The task must therefore also continuously check the value of the three buttons to allow the user to enter the target soil moisture value and to send this value to the PID.

Period and execution time of τ_7	
Period: $T_7 = 260$ ms	**Execution time:** $C_7 \leq 50$ ms

3 Software architecture

The watering system does not need to be fast. Indeed, the action of watering plants can be delayed without affecting the health of the plants. Thus, no task needs to stop the execution of another task due to its priority. All tasks have the same priority level and can be executed one after the other. However, in order for the buttons to be checked at regular intervals and for the user interface to be responsive to the user, task τ_6 needs to have a fixed period that cannot be delayed. This is why task τ_6 is executed in an interrupt routine. Thus, only the interrupt routine has a higher priority. Therefore, the software architecture that seems to be the most suitable for this system is the **Round-Robin with interrupts architecture**.

4 Tasks scheduling

Since the system is slow, there are no real constraints that force the period of a task to be worth a specific value. The only constraint in the system is the user interface. The user interface must be responsive to the user's actions. Therefore, the period of task τ_7 must be small enough so that the user does not see a delay between his/her actions and what he/she sees on the screen. That's why the smallest period was assigned to task τ_7. For ease of use, periods that are multiples of the period of task τ_7 were chosen. In doing so, it was noticed that the period of task τ_7 must not be too small so that when several tasks are called at the same time, their execution times are such that they can all interpose themselves in the time interval corresponding to the smallest period. The period of task τ_7 was thus chosen to be 260 [ms], which is a good compromise between a quick reaction time of the user interface and a time interval large enough to interpose the execution of several tasks.

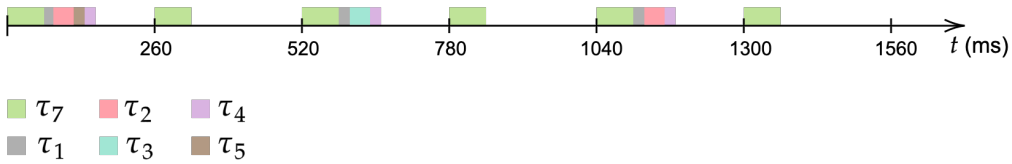

Figure 35: Tasks scheduling diagram

The period of the tasks τ_2 and τ_3 linked to the two PID controllers has been set to 1.04 [s]. The period of task τ_5 must be larger than the PID period as it retrieves the data from the conversion performed in the PID tasks to display on the screen. Moreover, if the measurements are refreshed too often on the LCD screen, the measurements will constantly oscillate on the screen, which would be difficult to read. The period of this task was thus set to 1.56 [s]. The period of the water level task is set to 520 [ms] because with a pump flow rate of 7 [l/min], the water tank can drain quite quickly. This is why a fairly recurrent check of the water level must be done. At each call of τ_1, the water level flag may indicate that watering must be stopped. Thus, the task τ_4 must have a period at most equal to that of the water level.

Within the software, the way to implement task scheduling requires two counters available in the PIC16f1789 microcontroller: the 8-bit counter TMR0 and the 16-bit counter TMR1. These counters trigger an interrupt as soon as they overflow. The period with which they are incremented can be chosen to set the period at which the interrupt is triggered. TMR0 is triggered at a period of 4.2 ms to perform the button debouncing task. On the other hand, TMR1 is triggered at a period of 260ms. Within the periodic interrupt routine that is triggered with TMR1, there are flags for each of the tasks. These flags are set to 1 when a task is ready to be executed.

5 Processing of the signals returned by the soil moisture sensors

In order to display soil moisture percentages on the LCD screen, the code must link the voltage values returned by the soil moisture sensors to soil moisture percentages. The relationship f such that $V_{output} = f(S_m)$ shown in Fig.27 must therefore be implemented within the code. The implementation of this relationship is done using look-up tables. To construct these look-up tables, the following procedure was followed:

1. The range of values of the gravimetric water content is normalised such that the normalised quantity, i.e. the soil moisture percentage S_m, can take its values in the range of 0 to 100%. Since a plant does not require a moisture content to the exact percentage and due to the high noise sensitivity of the sensors, percentages are displayed in 5% steps. Thus, a maximum error of 2.5% is allowed between the actual measurement and the value displayed on the screen. Then, the range of values that the soil moisture percentages can take is divided into 20 intervals of 5% as shown in Fig.36.
2. The digital voltages corresponding to the lower and upper bounds of the 20 intervals must be computed. Thus, any voltage returned from the AD conversion that lies between a pair of bounds must have the same soil moisture percentage. In Fig.36, the set of voltages corresponding to the boundaries of the 5% intervals can be seen on the y-axis. In binary, the digital voltages rounded on 10 bits take values ranging from 215 to 384 where these represent respectively a percentage of soil moisture of 0% and 100%.
3. The voltages returned by the AD conversion, initially on 12 bits, are rounded to 10 bits and are used as indices for the look-up table. However, a look-up table has indices coded on 8 bits and can contain a maximum of 256 values. Since here the indices are coded on 10 bits, it is required to store more than 256 values in the look-up table. This is why two look-up tables are created:

one containing the percentage values corresponding to indices lower than 256 and the other containing the percentage values corresponding to indices greater than 256. To know in which table is the value corresponding to the 10-bit index, it is required to check the most significant bits of this index. Then, the least significant bits are used as an index in the corresponding table.

4. At the index of the look-up table corresponding to the voltage returned by the AD conversion, the table contains the value of the soil moisture percentage rounded to the nearest multiple of 5%.

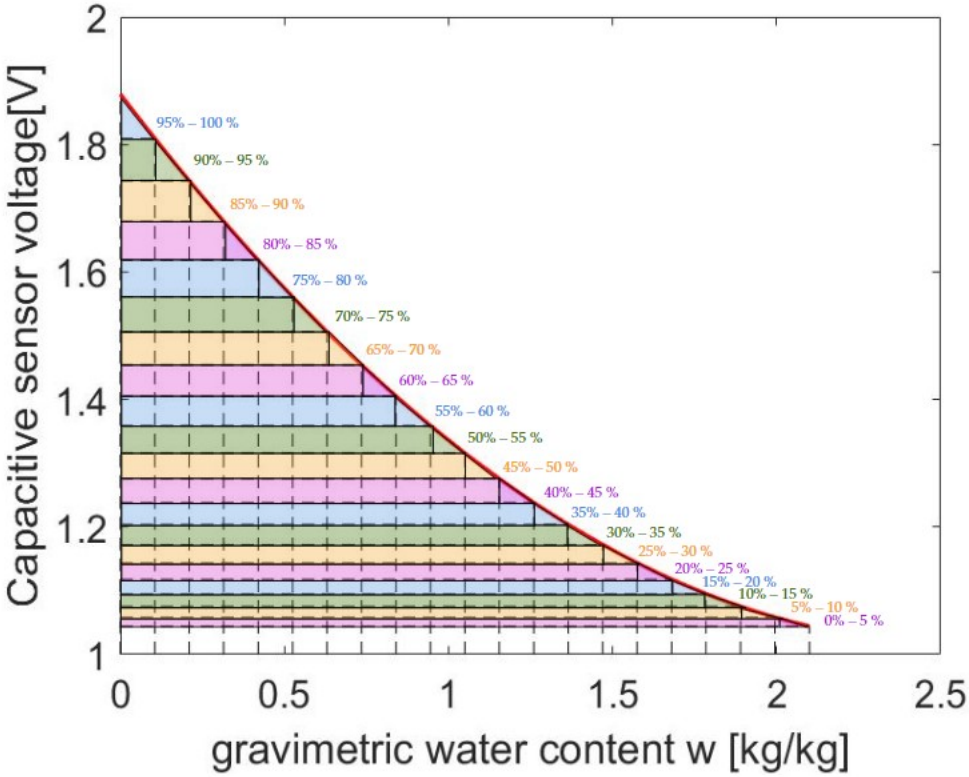

Figure 36: Illustration of the soil moisture percentage intervals that make up the look-up table

In order to encode the reference soil moisture value and to send it to the PID controller, the soil moisture percentage must be matched to the corresponding binary voltage value. Therefore, inverse look-up tables had to be implemented. In these, the table index is the reference in percent of the soil moisture encoded on 8 bits. The user can enter soil moisture percentages to the nearest 5%. Thus, there are 21 possible target moisture values from 0 to 100%. At the index of the look-up table corresponding to the reference value entered by the user, the table contains the value of the corresponding binary voltage. Since the binary voltages can take values between 215 and 384, they can be encoded on more than 8 bits. Thus, two look up tables had to be created: one to store the least significant bits of the binary voltage corresponding to a percentage and the other to store its most significant bits.

6 System state diagram

The system state diagram summarizes the states in which the system may be found and the transitions that bind each of its states. The system can be in five different states. These are listed below:

[1]: State of the system where the water level in the tank is high enough to be able to water the vegetable garden and where none of the PID flags have been raised. In this state, the system should not water either of the two zones.

[2]: State of the system where the water level in the tank is too low to water the vegetable garden. In this state, the PID flags can be raised but have no effect because the watering is blocked so as not to damage the pump.

[**3**]: State of the system where the level of the water tank is sufficient to water and where the *PID1 flag* of zone 1 is raised. In this condition, the system must water zone 1 of the vegetable garden.

[**4**]: State of the system where the level of the water tank is sufficient to water and where the *PID2 flag* of zone 2 is raised. In this condition, the system must water zone 2 of the vegetable garden.

[**5**]: State of the system where the level of the water tank is sufficient to water and where the PID flags of zones 1 and 2 are raised. In this condition, the system must water the two zones of the vegetable garden.

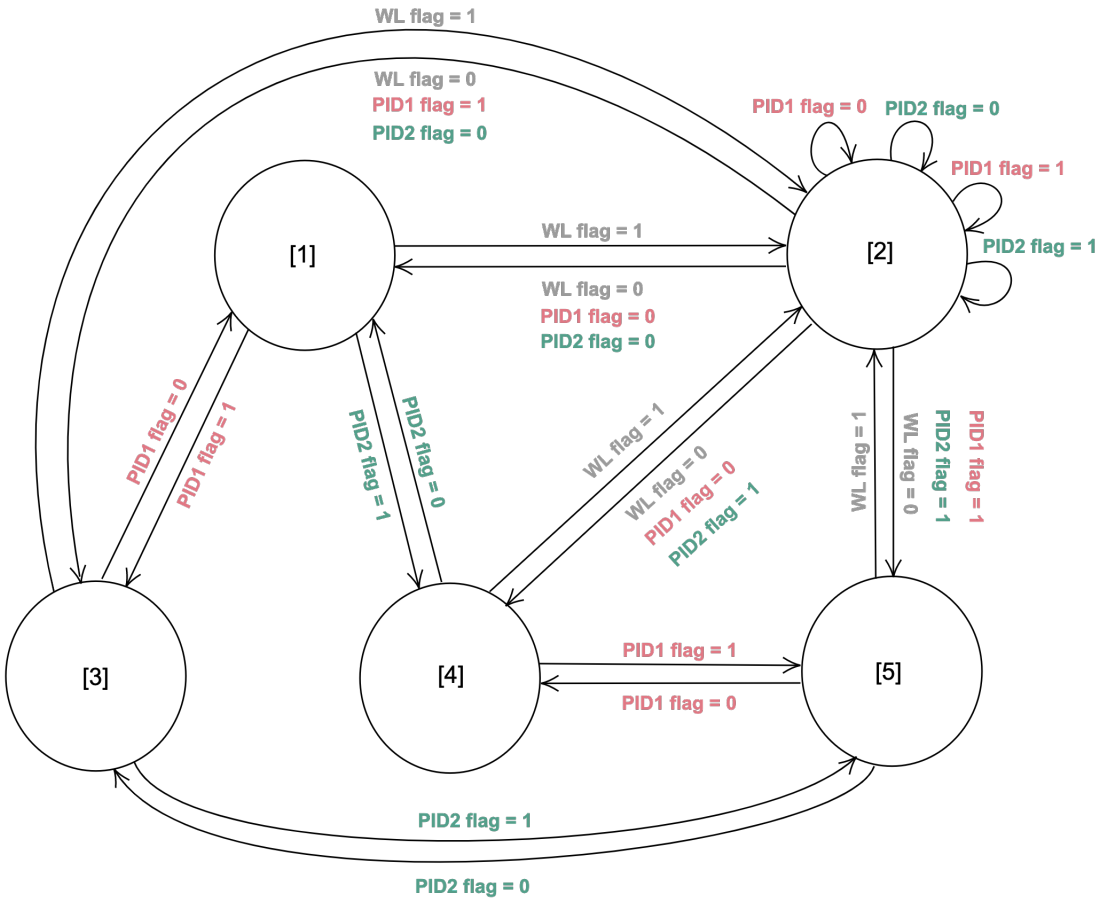

Figure 37: State diagram of the system

Part V
Construction and design of the system

This section goes through the technical considerations of the project. It gathers a detailed presentation of the design of the vegetable box as well as a description of the hydraulic system. This to finally conclude on the presentation of the complete final design.

1 Box design

The Fig.38 below provides the production plan of the garden box

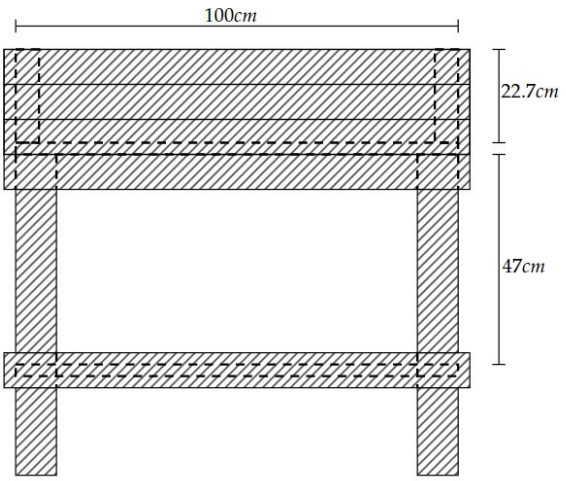

(a) side view along the length

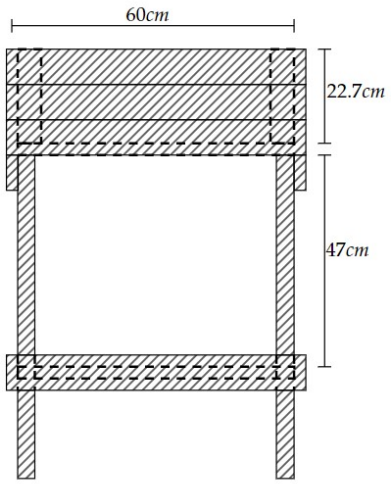

(b) side view along the width

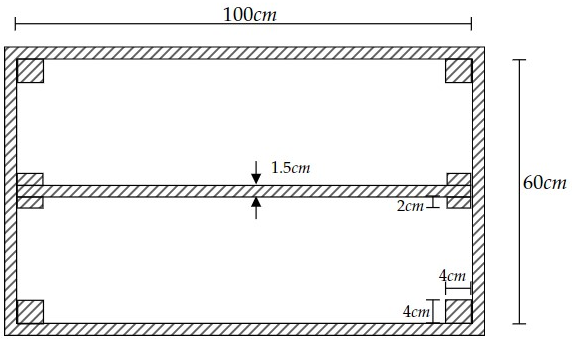

(c) top view

Figure 38: Production plan of the box

The structure is 88.7 [cm] high. The first compartment located at 19[cm] from the ground is 47 [cm] high. This compartment is open and designed to accommodate the water tanks and the pump. The second compartment located at 66[cm] from the ground constitutes the vegetable garden in itself. It is 23 [cm] high. The bottom of the garden is made of a marine plywood plate which is a material manufactured to be water resistant. The vegetable garden is divided in two zones of identical volume $\sim 1.5 \times 28.25 \times 100 = 4237,5$ [cm^3]. The central wall delimiting these two zones is slid into a notch provided for this purpose. Thus, it can be easily removed if the user wants to cultivate only one kind of plant on the whole area (given the way the system has been implemented, this would in no way be an obstacle to the proper functioning of the system).
The box was made to be demountable with removable butterfly screws to hold the top and bottom of

the box together.
The whole structure was made with recycled materials (wooden pallet, piece of wood and screws accumulated in our respective garage) and is made entirely of wood.

2 Vegetable garden structure

The Fig.39 provides a horizontal section of an area of the garden. It gives a schematic of the structure. To allow the water to be evacuated and not to stagnate at the bottom of the tank, we had to think about a configuration. First, a layer of clay ball of about 1.5 [cm] is positioned. Then, this layer as well as the walls of the garden are covered with a sheet of geotextile. Then finally the soil is placed on top of the geotextile. The geotextile creates a physical boundary between the soil and the clay balls, thus preventing the soil from seeping into the balls.

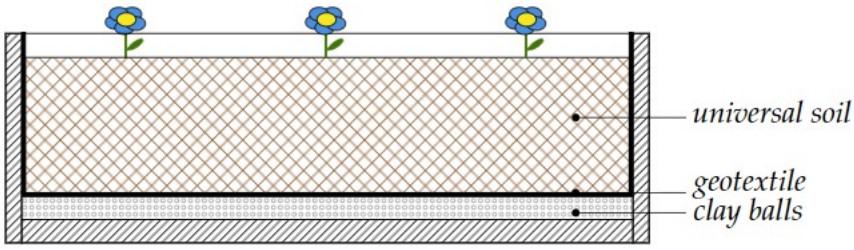

Figure 39: Scheme of the structure of the vegetable garden

Thanks to this installation, the water in excess having infiltrated in the ground, continues its way through the geotextile then through the clay balls. The path of the water through the layer of balls is facilitated by the great porosity of this one. Finally, thanks to the holes drilled horizontally at the bottom of the side walls of the tank and the non-watertightness of the construction, the water is evacuated as desired.

3 Hydraulic system

A drawing of the hydraulic system is provided at Fig.40.

It is composed of a water pump, a pipe network, two solenoid valves and a water tank whose capacity is of 45 [l] (the water tank is an old sorting bin that has been recycled).

A tap has been fixed to the water tank to be able to completely stops the water to flows out of it in urgent case. Nested pipes connect the pump inlet to the tank tap. This pipes are fixed on the pump side by a clamping ring and on the valve side by a collar.

The outlet of the pump is connected to the water supply system. As it can be seen on the Fig.40 this pipe is Y-shaped. The two upper branches of the Y overhang the two sprinkler zones and are made of pipes along which seven sprinklers have been fixed. In addition, the two valves placed at the entrance of these two branches control and regulate the flow of water in these branches and thus the watering of the zones.

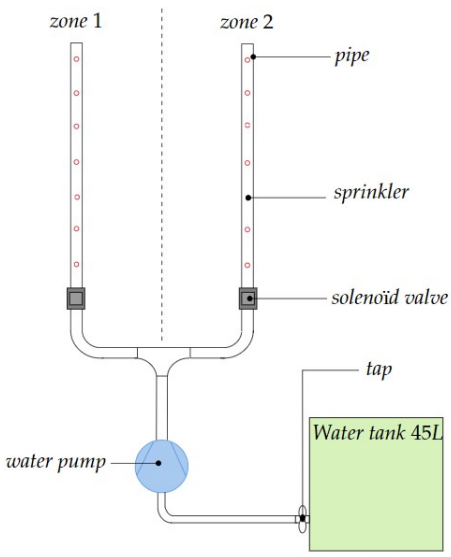

Figure 40: Plan of the hydraulic system

When watering of at least one of the two zone is needed,
the water is thus pumped from the tank to the pipe network.
Then, it is driven in the pipe(s) whose solenoid valve does
not block access. And finally, the water comes out of the sprinkler pipes to spray the targeted area of the garden.

Problem encountered and solutions

At first, the idea was to use microporous pipes to water the plant instead of sprinklers. However, during the first realizations and tests of the whole hydraulic system, there has been a problem. Indeed, it was found that microporous pipes have too much resistance to water flow. They have proven to be more suitable for large areas of almost continuous watering. The area of land to be watered in the project was so small that the pressure drop along the pipes was not large enough to be compatible with the pump pressure characteristics. In addition, the pipes were relatively old and probably dirty and therefore even more resistant to the passage of water. Thus, during the tests carried out, the limit pressure that the pump can deliver for the purpose of circulating water in the pipeline system was reached very quickly. And this one did not cease to deactivate itself when the maximum pressure was reached then to reactivate itself when the pressure had sufficiently fallen and this continuously. So it was problematic: on one hand, the control system would have been greatly perturbed by the recurrent deactivation of the pump and on the other hand, this could have damaged the pump over time.

The solution, proposed by our client, was to replace the micro-porous pipes with completely waterproof pipes in which holes were drilled to attach sprinklers. This configuration made it possible to reduce the resistance to water flow and therefore avoids the on and off mode of the pump. This was confirmed by the carried out tests.

4 Final system

The drawing in Fig.41 provides a diagram of the whole system

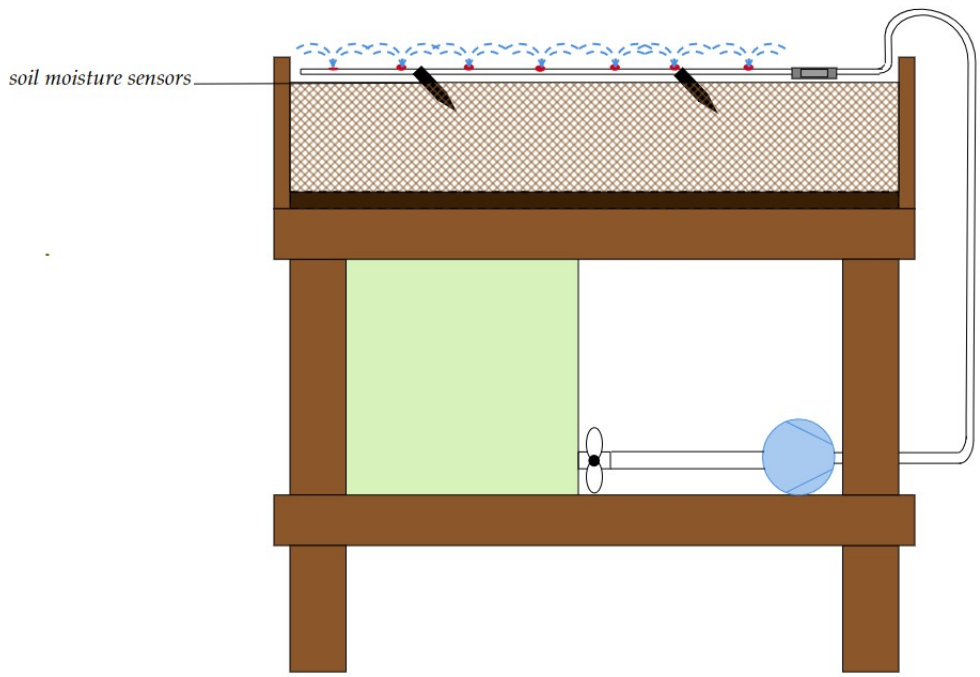

Figure 41: Drawing of the whole system

Part VI
Practical Realisation of the System

This section presents the real-world tests that were conducted. In addition, this section explains the changes that had to be made to the system following the results of these tests.

1 Explanations of tests conducted

Two types of real-world tests were conducted. The first was to observe whether the assembly of all parts of the project was functioning properly. The second was to test whether the control system parameters obtained during the simulations was well suited in practice.

1.1 First test: overall system operation

This first test consists of assembling the entire system and verifying that all parts work together.

Using the user interface, the soil moisture level target was set to 50% for both zones of the vegetable garden. When the system was turned on, the four soil moisture sensors were placed in the air and a percentage of 0% was well displayed on the LCD screen. Because of the difference between the soil moisture level detected by the sensors and the desired level, the two valves opened and the pump started as expected.

Then, the two sensors corresponding to the first zone were immersed in water. The soil moisture level detected for this zone went from 0 to 100% and the corresponding valve was closed because the difference between the measured level and the desired level became positive. The same operation was performed with the sensors corresponding to the second zone and also with the four sensors, with the result that the pump was stopped and the valves closed.
This test showed that the system behaved as expected when the sensors were placed in the two "extreme" environments (water and air in this case). However, this test does not allow us to draw any conclusions on whether the parameters of the control system are adequate or not.

1.2 Second test: control parameters verification

The purpose of this test was to check whether the theoretically calculated PID controller parameters were suitable for the application in real conditions. The idea was to monitor the soil moisture level measurements displayed on the LCD screen during two days and to see the evolution of these values.

This test was performed only on one of the two zones of the vegetable garden. This area was filled with soil with a soil moisture level of 20% and the two sensors corresponding to this zone were planted in the soil. Thanks to the user interface, the target soil moisture level of the zone was set to 60%.

The system was started: the valve corresponding to the considered zone was opened and the pump was turned on. The soil was watered until the sensors detected a soil moisture level exceeding the 60% requested by the user. Once this limit was exceeded, the valve was closed and the pump was switched off. The detected soil moisture level continued to increase by 20% from the time the pump was shut off until the soil moisture level in the zone stabilized.

Unfortunately, the conditions (indoor, very humid air) in which these tests were performed did not allow to observe a new period of watering of the system. Indeed, in 48h, the level of soil moisture in the area had only decreased by 10% whereas 20% or more would have been necessary to re-initiate the watering.

To sum up, the system showed a behaviour a bit different from what was expected. In fact, as in the simulations, it takes a bunch of seconds between the moment the water is pumped and the moment the sensors detect the soil moisture modification. However, the overshoot observed was significantly higher in reality. Another factor is that the evaporation speed during the experimentation was very slow because the conditions weren't optimal for the water to evaporate.

The parameters should be more fine-tuned to fit best with the real world. However, at the time the parameters chosen are:

$$K_p = 5$$
$$K_i = 0$$
$$K_d = 2$$
$$threshold = 20$$

Tests over a much longer period of time should be conducted in order to refine the PID parameters more precisely so that the system behavior matches the desired theoretical behavior as closely as possible.

Part VII
Management of the project

The aim of the project was also to become familiar with project management and to apply certain techniques in order to carry out the project. In this section, the entire managerial aspect behind the technical implementation of the project will be detailed.

The first thing to define is the concept of project management. Many different definitions exist but the common point between each can be summarized as follows:

"Project management is a way of reliably delivering a defined outcome."

As this definition specifies, it is therefore essential to set out precisely the final outcome and the means available to achieve it. It is for this reason that the so-called Golden Triangle or Eternal Triangle has been defined: Time, Cost and Scope. These three elements play a major role in the quality of the final project and must therefore be considered at each stage of the project.

Figure 42: Golden triangle

The project management process can be divided into several steps which can be described as follows:

- **Initiating** : the project team must be established, the stakeholders must be identify, the scope of the project must be defined. All this is condensed into what is called a "Project Charter".
- **Planning** : establish a project plan over time, define the critical path, list potential risks. All this is condensed into what is called a "Gantt chart".
- **Implementing** : acquisition of equipment, carrying out the various tasks of the project.
- **Controlling** : quality of tasks performed control and corrective actions taken to manage risks, time and communication management. All this is listed in status reports written quite frequently.
- **Closing** : final project validation, final report writing.

1 Project start

1.1 Scope and project charter

The definition of the scope of the final project was defined in collaboration with the client, the *Pot'ingé*, and the teachers supervising the course. The exact scope can be described as follows:

- The system consists of a vegetable garden containing aromatic herbs that has an automatic watering system based on the percentage of moisture in the soil.

- The system is also composed of a water tank whose level is continuously checked by a water level sensor.
- The system has a user interface which allows to display the current and target soil moisture percentages and to enter a target soil moisture percentage.

An extended scope has also been defined to improve the system. It is as follows:

- The independent management of 2 zones in the box separated by a wooden plate in order to be able to cultivate plants with different water needs in the same vegetable garden.

This project having been developed with a precise customer, it has a real and immediate utility. Indeed, the *Pot'ingé* loses a lot of time to water all its vegetables, plants and seedlings. The members thus wished to install an automatic watering system. However, in order to simplify the phase of tests and the real implementation of the system, it was decided that this last one would be carried out on an inside wooden box of small dimensions which can contain aromatic plants. However, the system could be extended to larger outside areas.

A project charter was established at the beginning of the project in order to set the scope of the project, the objectives, the schedule, the risks initially identified as well as the distribution of the work between the members of the group. It is available in the Appendix. This charter made it possible to define a common framework for work between the client and the members of the group. Although some things noted in this charter have evolved over time, the skeleton of the project is well described in this document.

2 Distribution of work among group members

To carry out this project, it was necessary to divide the members into several subgroups. The subdivision was as follows:

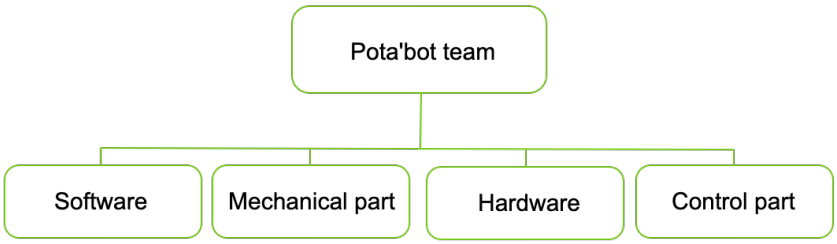

Figure 43: General organisation of the project

People were divided into groups according to their skills in the different tasks in order to make the best use of each person's qualities.

At the communication level, meetings were held weekly between the project members to share the progresses of each of the sub-groups. Decisions affecting only a part of the project were taken by the members of the subgroup dealing with this part while decisions affecting the project more generally were discussed with the whole group.

Meetings with the client were also held throughout the project to provide an update on the progress of the project. For more pressing questions and requests, the contact was established by email. Depending on the requests, different members of the group wrote emails but everyone was copied each time so that the information would circulate. A more detailed description of client interactions will be provided in Section 6 below.

3 Planning of the project

Once the general scope of the project has been clearly established, it is very important to define a general schedule grouping all the tasks to be done and a deadline for each of these tasks. The schedule must be done in such a way that the maximum number of tasks are carried out in parallel so that all members of the group are occupied all the time and thus optimize the distribution of working time. The critical path, that is to say the set of tasks for which a delay has a serious impact on the achievement of others, must be identified in order to constantly avoid falling behind in these specific tasks. Time management is one of the determining factors for the success of the project so the schedule must be constantly modified according to possible delays or unforeseen events.

A chart has been established with the tasks, the members of the group assigned to it and the associated deadlines. This charter was drawn up at the beginning of the project in such a way as to predict precisely the periods of work and the periods during which it was difficult to work on the project (for example during the January session). Obviously, as the project progressed, the distribution and deadlines of tasks have evolved. However, in order to maintain a certain rigour in the realization of the project, we have tried to follow this charter as much as possible throughout the project. In order to visualize the tasks carried out throughout the year, a timeline of the project was created with the most important steps. It is located in Fig.44.

In this figure, the tasks are divided into the following categories:

- General tasks : Tasks related to the managerial aspect of the project. This ranges from defining the schedule to writing a report taking into account the progress of the project. Many of these tasks were completed at the beginning of the project to provide a solid foundation for the rest of the project.
- Hardware tasks : Tasks related to the electronic part of the project both from a theoretical and practical point of view. They therefore had to be carried out throughout the project: initially for the development of theoretical circuits, at the end for the PCB soldering.
- Software tasks : These tasks concern all the writing of code in assembly language. They were mainly carried out in the second part of the year because they required a precise definition of the scope of the project and a certain mastery of the *Embedded systems* course.
- Mechanical tasks : Tasks concerning the entire construction part of the project. The majority of the non-electronic components of the project were recovered, designed and built by the group. All of these tasks are included in this section.
- Control tasks : Tasks related to the entire control part of the system. This part goes from the study of the theoretical model to the modeling of real physical phenomena. The discussion on the parameters of the adopted model is also contained in this part.

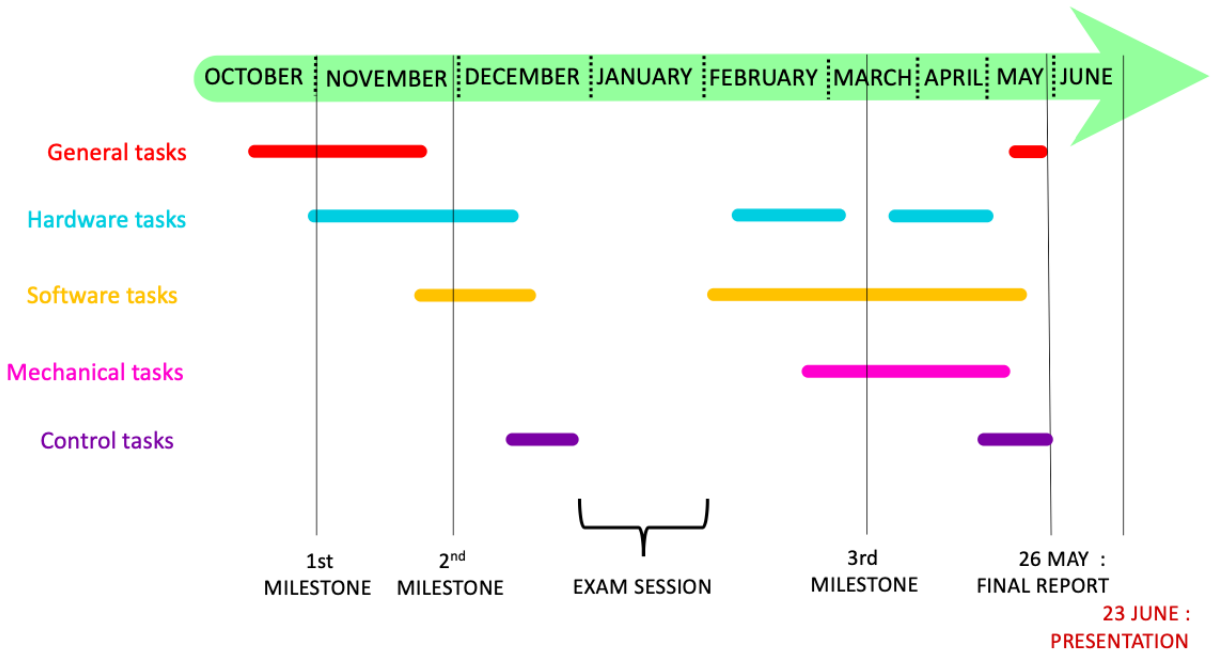

Figure 44: Timeline of the project

4 Risks assessment and management (FMEA)

It is also essential to identify what could affect the smooth running of the schedule. Events that could delay or modify the project's trajectory are called risks. In order to reduce the impact of these potential risks, a FMEA (*Design Failure Mode and Effects Analysis*) was performed at the beginning of the project. This procedure consists of listing all identifiable risks, their impacts and the means to avoid them. This step is decisive because it allows to formally identify all the elements to which particular attention must be paid. The early identification of risks that may arise throughout the implementation of the project allows for a longer period of anticipation and therefore reflection on the potential choices to be made. The anticipation of risks also allows to foresee a budget dedicated to the possible modifications to be made. Moreover, it allows to discuss with the client in advance and thus avoid potential blocking situations. Obviously, the risk table evolves with the project and not all risks are identifiable at the beginning of the project. However, it remains a very good compass throughout the project.

In the FMEA, for each identified risk, a score is associated. This score is the product of three variables: the severity of the risk, its occurrence and its detectability. This score is called the Risk Priority Number (RPN). If it is greater than 100, an action must be planned to mitigate this risk and must be carried out because it means that it has a huge impact on the success or not of the project.

	Tasks	Potential effect of failure	Potential cause of failure	Detection and recommended actions
Mechanical part	Box design	Box cannot support the weight of the soil	Wrong computation of materials resistance, poor model	Double checks the formulas and the model, ask for help
	Hydraulic circuit	Watering system does not work	Wrong computation of the pression inside the pipes, poor model	Double checks the formulas and the model
Hardware	Power supply use (230V)	Direct contact with 230V =>injuries	Lack of caution, poor system protection	Isolation of the dangerous part of the circuit when it is on
		Damage to other electronic components	Lack of caution, poor understanding of the electrical circuit	Check the circuits several times before supplying power.
	Calibration of the soil moisture sensors	Wrong measurements that don't reflect the real soi moisture level	Bad understanding of the calibration process	Verification of the calibration procedure and reading of other documentation
Software	Code implementation	Bad code could damage hardware components	Lack of caution and of understanding of the MCU's datasheet	Make debugging / code in a careful way and part by part
Control	Real system simulations	Wrong penetration and flow rate parameters/model	Wrong computation, poor model	Multiple experiments to test the model and modify the parameters
		Poor definition of the model parameters	Actual behavior not adapted to external conditions	Start real-life experiments early

Table 2: Summary of the FMEA complete tab

The complete FMEA table is attached to this report. However, a summary of the most significant risks is presented in Tab.2.

5 Budget management

In the industry, the budget is almost the most determining element in the management of a project. This project was no exception to that rule. All the choices made were made with this constraint in mind. Therefore, it was sometimes necessary to make adaptations to the project that took longer in order to save money.

A budget of 100€ was allocated to the group at the beginning of the project. In addition, material such as the microcontroller or some hardware elements were lent for free. The rest of the electronic elements of the project were chosen and bought by the members of the group thanks to this budget.

For the mechanical part, the customer (*Pot'ingé*) assured from the beginning of the project that he could cover certain expenses concerning the acquisition of material. For the construction of the wooden box as well as for the hydraulic circuit, the majority of the elements were recycled and not bought. This approach seems coherent with the goal of the project which is the most efficient and ecological use of resources.

Part of the project	Components	Price [€]	Bought by
Hardware part	Soil moisture sensors	22.80	Pota'bot
	Barrel jack connectors	2,44	\
	12 V power supply	20	\
	Terminal blocks	3.234	\
	All the other electronic components	60.11	Pota'bot
	PCB manufacturing	\	\
		Total of the part : 108.584 €	
Mechanical part	Soil	30	Pota'bot
	Gray balls	10	Pota'bot
	Pump	76	Pot'Ingé
	Sprinklers	1.5	Pot'Ingé
	Pipe connectors	24	Pota'bot
	PVC tube	\	\
	Pipes	\	\
	Electro-valves	37.98	Pota'bot
	Tank	50	\
	Tank's tap	12	\
		Total of the part : 241.48 €	

Table 3: Budget of the project

The Tab.3 gives an accurate account of the use of the budget [5].

6 Contact with the client

Our client is the *Pot'ingé*. Our referral contact throughout the project was François Rigo. We shared our progress with him throughout the project, which allowed us to develop a relationship of trust with him and effective communication. The majority of non-urgent information and questions were sent by e-mail. However, throughout the project, face-to-face meetings were held to further explain the progress of the project.

Moreover, Mr. Rigo has always been very available, very helpful for our search for equipment for the hydraulic circuit in particular and supportive.

[5] When the 'Bought by' boxes are empty, it means that the component has been retrieved or has been offered by a third party to the project

Part VIII
Conclusion

This part will summarize all the work done in order to achieve the success of the project: the final results of each part will be detailed and the learnings made during the project will be mentioned. Possible improvements to the project will also be proposed.

1 Key results

The first thing that can be said is that the final project fulfills the scope that was initially set. Therefore, it can be said that the main objective has been reached and that it is a success. The outcome of the different technical parts can be summarized as follows:

- On the hardware side, a PCB has been fully designed and successfully soldered. Its behavior corresponds entirely to the desired one and all the elements composing it work correctly.
- From a control point of view, the system regulates the water supply to the plants in an appropriate and efficient way thanks to the PID controller implemented.
- At the software level, a complete system allowing to manage real-time constraints and to interact with the user has been developed. This one exploits to the maximum the possibilities of tools available in the assembly language.
- At the mechanical level, an entire vegetable garden was built as well as its hydraulic part. This working system has been designed in a practical and modular way.

2 Skills acquired through the project

Technical, theoretical and human learnings were made during this project.

Indeed, each member of the group was confronted with new obstacles that had to be overcome. Each member of the group had to call upon his/her knowledge, his/her ability to reason but also his/her communication and teamwork skills. Indeed, problems rarely discussed during the theoretical courses were presented which pushed everyone to leave their comfort zone and to think together.

It can therefore be noted that the following learnings have been made:

- Project, budget and planning management
- Management of work distribution and communication between group members
- Research and reading of scientific articles
- Critical look at theoretical results and practical observations
- Ability to ask for help from appropriate people when needed
- Soldering of electrical components and PCB design
- Mastery of the assembly language and of the architecture of a MCU
- Understanding of a control model and its theoretical limits

3 Potential improvements

Although the project is a success, there is always room for improvement. At least two improvements can be made fairly quickly, these are :

- Implementation of a sleep mode. Indeed, since the system created is intended to operate continuously, its energy consumption is a data to take into account. Watering plants is a slow action and the occurrences are quite spaced, so it seems a good idea to create a mode during

which the system requires less energy to continue working. Obviously, the user would have to be able to bring the system out of this mode as soon as he uses the interface.

- Better protection of cables connecting the PCB to external electronic components (sensors, pumps, valves). Indeed, although attention has been paid to the protection of these cables, if the system is to be placed outside or in an environment less protected from the elements, greater protection must be provided for the electrical cables. This will avoid any risk of damage to the electronic components.

More significant improvements can also be considered:

- One could imagine that the power required to operate the system comes from a solar panel or a battery. A coordination system between the power supply and the automatic watering system will therefore also have to be implemented. This will make the application of this project even more interesting from the point of view of efficient use of resources.
- The management of other parameters (temperature, sunlight) could be taken into account in order to improve the monitoring of plants and thus the yield of the vegetable garden.
- A way to adapt the parameters of the control system via the user interface could also be imagined. This would allow to vary the behavior of the system according to the types of plants present in the vegetable garden and to be more flexible to the needs of the customer.

Part IX

Acknowledgements

In order to carry out this project, the *Pota'bot* team sought advice, ideas and help from many people. They have all played their part in the success of this project. That's why the *Pota'bot* team would like to warmly thank:

Mr. ADRIAENS Jean-Pierre,
Mr. BIRON Marc,
Pr. BOIGELOT Bernard,
Mr. CORNET Fabrice,
Ms. DELBROUWIRE Céline,
Mr. DIGREGORIO Gabriel,
Pr. DRION Guillaume,
Mr. FONDER Michaël,
Mr. FYON Arthur,
Mr. LAURENT Philippe,
Mr. PIERRE Hervé,
Pr. REDOUTE Jean-Michel,
Mr. RIGO François,
Mr. RODRIGUEZ DELA ROSA Patrice,
Pr. VANDERBEMDEN Philippe

References

[1] *5 Watt Miniature AC-DC Converter*. VTX-214-005-005. Vigortronix. URL: https://www.farnell.com/datasheets/2043018.pdf.

[2] M. Biron. *Major Project in Electrical Engineering lecture slides*. 2021-2022.

[3] *Dual DC socket*. DC10L. CLIFF. URL: https://www.farnell.com/datasheets/2286781.pdf.

[4] A. Helmenstine. *Table of Electrical Resistivity and Conductivity*. 2020. URL: https://www.thoughtco.com/table-of-electrical-resistivity-conductivity-608499.

[5] J. Hrisko. *Capacitive Soil Moisture Sensor Theory, Calibration, and Testing*. Maker Portal LLC, New York, 2020. URL: https://www.researchgate.net/publication/342751186_Capacitive_Soil_Moisture_Sensor_Theory_Calibration_and_Testing.

[6] *Kontakt Chemie Plastik 70*. URL: http://www.kontaktchemie.com/KOC/KOCdefaultV2.csp.

[7] *Low threshold N-Channel Enhancement-Mode Vertical DMOS FET*. TN0702N3-G. Supertex inc. URL: https://www.farnell.com/datasheets/2648021.pdf.

[8] R. Mohan et al. *Measurement of Soil Moisture Content at Microwave Frequencies*. Division of Electronics, School of Engineering.CUSAT, Kochi-682022, India, 2014. URL: https://www.sciencedirect.com/science/article/pii/S1877050915000411?ref=pdf_download&fr=RR-2&rr=7115c9f61a0883e.

[9] *MPLAB XC8 PIC Assembler User's Guide*. Microchip. URL: https://ww1.microchip.com/downloads/en/DeviceDoc/MPLAB%5C20XC8%5C%20PIC%5C%20Assembler%5C%20User%5C%27s%5C%20Guide%5C%2050002974A.pdf.

[10] *N-Channel Enhancement-Mode Field Effect Transistor*. BS170-D75Z. ON Semiconductor. URL: https://www.farnell.com/datasheets/2299741.pdf.

[11] *PIC16(L)F1789 8-Bit Advanced Analog Flash Microcontroller*. Microchip. URL: http://ww1.microchip.com/downloads/en/DeviceDoc/40001675C.pdf.

[12] P. Placidi et al. *Characterization of low-cost capacitive soil moisture sensors for IoT networks*. Dipartimento di Ingegneria, University of Perugia, Italy, 2020. URL: https://www.mdpi.com/1424-8220/20/12/3585/htm.

[13] *Silicon Rectifier*. DO-204AC (DO-15). Taiwan Semiconductor. URL: https://www.farnell.com/datasheets/2182644.pdf.

[14] *Solenoid valve*. URL: https://www.amazon.fr/%C3%89lectromagn%C3%A9tique-%C3%89lectrique-%C3%89lectrovanne-Magn%C3%A9tique-Normalement/dp/B08H25Q5S9.

[15] *Subminiature High Power Relay SRM*. IMO. URL: https://www.farnell.com/datasheets/388244.pdf.

[16] *Through-hole-mounting Switches*. Standard: B3F-1000 Series. OMRON. URL: https://www.farnell.com/datasheets/2082873.pdf.

Appendices

A General circuit

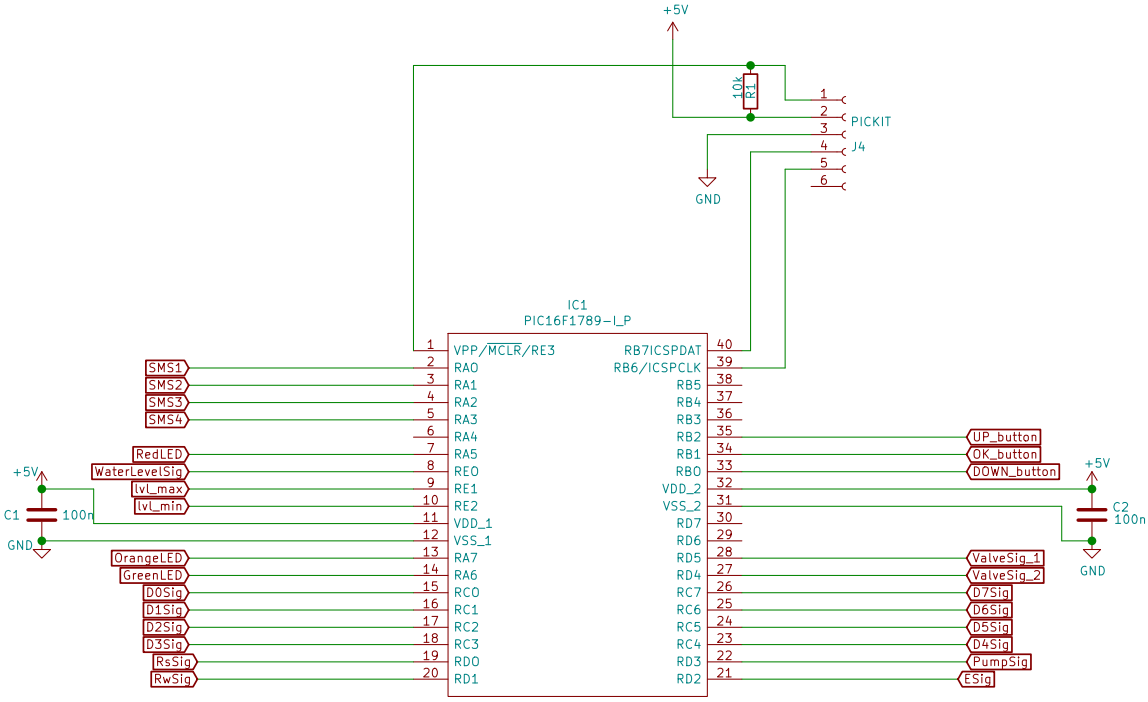

Figure 45: Microcontroller circuit

B Component list

Component		Reference	Quantity
Microcontroller		PIC16F1789-LP	1
Buttons		BF3-1020	3
LCD		MIKROE-55	1
Converter 230 [V] AC - 5 [V] DC		VTX-214-005-005	1
Capacitor	100 [μF]	electrolityc	3
	10 [μF]	electrolityc	2
	1 [μF]	ceramic	1
	100 [nF]	ceramic	11
Resistance	1 [MΩ]	/	4
	100 [kΩ]	/	7
	10 [kΩ]	/	3
	200 [Ω]	/	3
Potentiometer		/	1
Diode		1N5392GR0G	7
MOSFET	2.1 [V] theshold	BS170-D75Z	6
	1.7 [V] threshold	TN0702N3-G	2
Relay		SRM-1C-SL-5VDC	3
Barrel Jack connector		FC681465P	1
Terminal Block	x2	/	2
	x3	/	5
	x4	/	1
LED	Green	/	1
	Orange	/	1
	Red	/	1

Table 4: Electronic components

C Sensors calibration

C.1 Measures

		W_w/W_s	W_tot [kg]	W_w [kg]	V_w [ml]	V_to_add[ml]	sensor1[V]	sensor2[V]	sensor3[V]	sensor4[V]	mean[V]
V_tot [l]	0,8	0	0,0165	0	0	16,54964895	1,8	1,86	1,86	1,82	1,835
W_s [kg]	0,165	0,1	0,1815	0,0165	16,54964895	16,54964895	1,75	1,76	1,83	1,78	1,78
rho_eau[kg/m3]	997	0,2	0,198	0,033	33,09929789	16,54964895	1,72	1,74	1,76	1,76	1,745
W_container[kg]	0,041	0,3	0,2145	0,0495	49,64894684	16,54964895	1,72	1,71	1,69	1,75	1,7175
		0,4	0,231	0,066	66,19859579	16,54964895	1,66	1,63	1,64	1,69	1,655
		0,5	0,2475	0,0825	82,74824473	16,54964895	1,639	1,587	1,647	1,667	1,635
		0,6	0,264	0,099	99,29789368	16,54964895	1,555	1,564	1,605	1,645	1,59225
		0,7	0,2805	0,1155	115,8475426	16,54964895	1,396	1,555	1,58	1,572	1,52575
		0,8	0,297	0,132	132,3971916	16,54964895	1,302	1,384	1,355	1,496	1,38425
		0,9	0,3135	0,1485	148,9468405	16,54964895	1,282	1,33	1,33	1,296	1,3095
		1	0,33	0,165	165,4964895	16,54964895	1,27	1,27	1,3	1,34	1,295
		1,1	0,3465	0,1815	182,0461384	16,54964895	1,19	1,25	1,29	1,303	1,25825
		1,2	0,363	0,198	198,5957874	16,54964895	1,195	1,24	1,287	1,305	1,25675
		1,3	0,3795	0,2145	215,1454363	16,54964895	1,19	1,224	1,243	1,262	1,22975
		1,4	0,396	0,231	231,6950853	16,54964895	1,156	1,195	1,186	1,228	1,19125
		1,5	0,4125	0,2475	248,2447342	16,54964895	1,08	1,184	1,177	1,223	1,166
		1,6	0,429	0,264	264,7943831	16,54964895	1,067	1,155	1,159	1,189	1,1425
		1,7	0,4455	0,2805	281,3440321	16,54964895	1,054	1,126	1,13	1,146	1,114
		1,8	0,462	0,297	297,893681	16,54964895	1,05	1,086	1,098	1,133	1,09175
		1,9	0,4785	0,3135	314,44333	16,54964895	1,068	1,1	1,064	1,093	1,08125
		2	0,495	0,33	330,9929789	16,54964895	1,026	1,07	1,074	1,097	1,06675
	Saturation:	2,1	0,5115	0,3465	347,5426279		0,991	1,063	1,05	1,083	1,04675

Figure 46: Table of measurements

D Project charter

PROJECT CHARTER

Project Title: Pota'bot

Project Sponsors: M.Biron, B.Boigelot, G.Drion, J-M Redouté

Date Prepared: 20 May 2022

Project Managers: L. Charles, C. Verstraeten, J. Adriaens, E. Rodriguez de la Rosa, M.Cornet

Project Customer: Pot'ingé

Project Purpose or Justification:

The purpose of the project is to develop a self-watering vegetable garden.

Project Description:

The goal of our project is to design two structures:

- A self-irrigated vegetable bin divided into two zones
- A rain tank designed to supply in water our vegetable bin

And additionally, if we have time, we will develop other systems of self-regulation of parameters related to the growth of plants.

Project and Product Requirements:

For this project we will need:

- 1 square wood box of 1m x 1m x 0,3m
- 1 (or 2) drip garden hose
- 1 tank
- 1 watering pump
- 4 sole moisture sensors
- 3 water depth sensors (electrodes)
- 1 LCD screen with buttons
- Aromatic plants
- 0,3 m^3 of potting soil
- 1 PIC16 microcontroller
- Electrical wires
- Wheels
- Power supply (12 V)
- Water pump filter

The box will be filled with soil and the herbs will be planted in two different areas.
The hydraulic system will be composed of a pump bringing the water collected in a tank to the box and a drip hose used to water the plants.
The humidity sensors will be placed at strategic positions in each zone (2 in each zone).
Depending on the humidity data encoded by the user and displayed by the LCD screen and the data from the humidity sensors, a signal is sent to the watering system. It will indicate which area of the box needs water or not and in what quantity.
The water level sensors in the tank should indicate when the water level is sufficient for pumping and when the water level is too high

PROJECT CHARTER

Acceptance Criteria:

We will be satisfied as long as our watering system works autonomously, according to the information provided by the users to the system, and guarantees the growth of the plants. The gestion of the water tank fed by the rain comes second: as long as we have water continuously to water the plants properly, it will be acceptable.
Achieve to manage a single zone associated to one single need in humidity will be satisfactory, extend our project to multiple zones of different needs in humidity will be seen as a bonus.

Initial Risks:

Risk category	Risk Description	Root cause	Risk mitigation / prevention
Planning	Receive the material in late	Suppliers' deadline	Ordering early enough
Budget	Paying more than 100€	Bad management of the budget	Having a lower estimation of budget than 100€ and estimating the budget allowed by Pot'ingé
Hardware	Unintentional degradation of the material	Being negligent	Being careful with our material, preventing possible breakage, have plan B and pay attention to the absolute maximum ratings of the components
Control	Inaccuracies in the watering trigger system (the information from the humidity sensors are not well managed)	Inaccurate model design	Take the time to design rigorous models for the control system and to experiment on smaller scale before testing on the whole system.

PROJECT CHARTER

Project Objectives	Success Criteria	Person Approving
Scope:		
Building an autonomous watering system for a garden	Achieving the acceptance criteria	
Time:		
20 May 2022	Finishing before 20 May 2022	
Cost:		
100€	Sticking to a budget below 100€	
Quality:		
/	/	
Other:		

Summary Milestones	Due Date
First circuit simulations	2nd November 2021
Ordering the hardware	7th November 2021
Building the box (+ water tank)	17th December 2021
Calibrating and coding the sensors (embedded system)	21st February 2022
Building the watering system	21st February 2022
Software part	15th March
Numerically simulate the time evolution of the signals provided by the sensors according to different situations	5th March
Final PCB design	8th April

Estimated Budget:
100 euro

PROJECT CHARTER

Project Team:

Name	Function	Note
Manon Cornet	Constru/ software/ sim	
Elisa Rodriguez de la Rosa	Constru/ hardware/ syst	
Lola Charles	Constru / hardware / sim	
Jérôme Adriaens	Constru/ software/ sim	
Cédric Verstraeten	Constru/ Software/ syst	