MPCA Project

TITLE OF THE PROJECT: Smart Speed Detection and Alert System Using Arduino

Team Members:

Sl. No	Name	SRN
1	H K Manaswin	PES1UG24AM108
2	Harshith R	PES1UG24AM117
3	Harsha K R	PES1UG24AM114

Components used:

Arduino Uno (ATmega328P): Main microcontroller. Runs the detection algorithm, handles interrupts, controls all peripherals, and streams data over serial at 9600 .

IR Speed-Sensor Module x2 (pins D2, D3): Two infrared break-beam sensors placed exactly 10 cm apart. Each sensor pulls its output LOW when a vehicle interrupts the beam, triggering a hardware interrupt (FALLING edge) on the Arduino.

HC-SR04 Ultrasonic Distance Sensor (Trig D10 / Echo D11): Emits 40 kHz pulses and measures echo return time to compute distance. Confirms an object is within the sensing zone (2-100 cm) before accepting a speed measurement, preventing false triggers.

LDR – Photoresistor (pin A0): Light-Dependent Resistor in a voltage-divider with a 10 kOhm resistor. The ADC reading (0-1023) is inverted in software (lightValue = 1023 - raw) for an intuitive scale. Values below 400 are classified as Night.

Active Buzzer (pin D12): Audible over-speed alarm. Activated whenever measured speed exceeds the configurable speed limit (default: 10 km/h).

Red LED (pin D13): Visual over-speed indicator; turns ON simultaneously with the buzzer.

220 Ohm Resistor: Current-limiting resistor in series with the red LED.

10 kOhm Resistor: Voltage-divider resistor paired with the LDR on the A0 analog line.

Breadboard & Jumper Wires: Prototyping connections between all modules and the Arduino Uno.

USB Cable + PC / Laptop: Powers the Arduino (5 V via USB) and receives the serial data stream for the React-based monitoring dashboard.

Explanation about the project :

The Smart Speed Detection and Alert System is an embedded project built around an Arduino Uno. It uses two infrared break-beam sensors (IR modules) placed exactly 10 cm apart on a model road. As a vehicle travels from the first sensor to the second, the Arduino records the precise time difference in microseconds using hardware interrupts on the FALLING edge of each sensor (interrupt pins D2 and D3).

Speed is calculated from the known sensor spacing (0.10 m) and the measured travel time:

Speed (km/h) = (0.10 m / Time_seconds) x 3.6

A parallel confirmation stage uses the HC-SR04 ultrasonic sensor to verify that a physical object is actually within the speed-trap zone (2-100 cm) before accepting the time measurement, eliminating false-positive triggers caused by electrical noise or stray reflections.

An LDR photoresistor connected to analog pin A0 monitors ambient light. Because the LDR's resistance increases in darkness (lowering the voltage on A0), the raw ADC reading is inverted in software (lightValue = 1023 - raw) so that low values reliably indicate darkness. Readings below 400 are classified as Night mode.

If the computed speed exceeds the configurable speed limit (default 10 km/h), the Arduino simultaneously activates an active buzzer (D12, audible alarm) and a red LED (D13, visual alarm). All sensor data is streamed over UART serial at 9600 baud in a structured text block format. A companion React.js + Recharts dashboard (running via the Web Serial API) parses this stream in real time and displays charts, summary statistics, a serial monitor, and a data table. After each detection cycle the state machine resets, ready for the next vehicle.

Circuit Diagram:

```
Pin connections (Arduino Uno):

   D2   -- IR Sensor 1 (OUT)   ; sensor VCC=5V, GND=GND
   D3   -- IR Sensor 2 (OUT)   ; sensor VCC=5V, GND=GND
   D10  -- HC-SR04 TRIG        ; D11 -- HC-SR04 ECHO ; VCC=5V, GND=GND
   D12  -- Active Buzzer (+)   ; Buzzer (-) -- GND
   D13  -- 220 Ohm resistor -- LED (anode) ; LED (cathode) -- GND
   A0   -- Junction of LDR (top) and 10 kOhm resistor (bottom to GND)
           LDR upper terminal connected to 5V

Layout notes:
   - The two IR sensors face each other across the model road, 10 cm apart,
     so a passing object breaks both beams in sequence.
   - The HC-SR04 is aimed along the road to detect object presence.
   - The LDR is positioned to sense ambient room / environmental light.
```

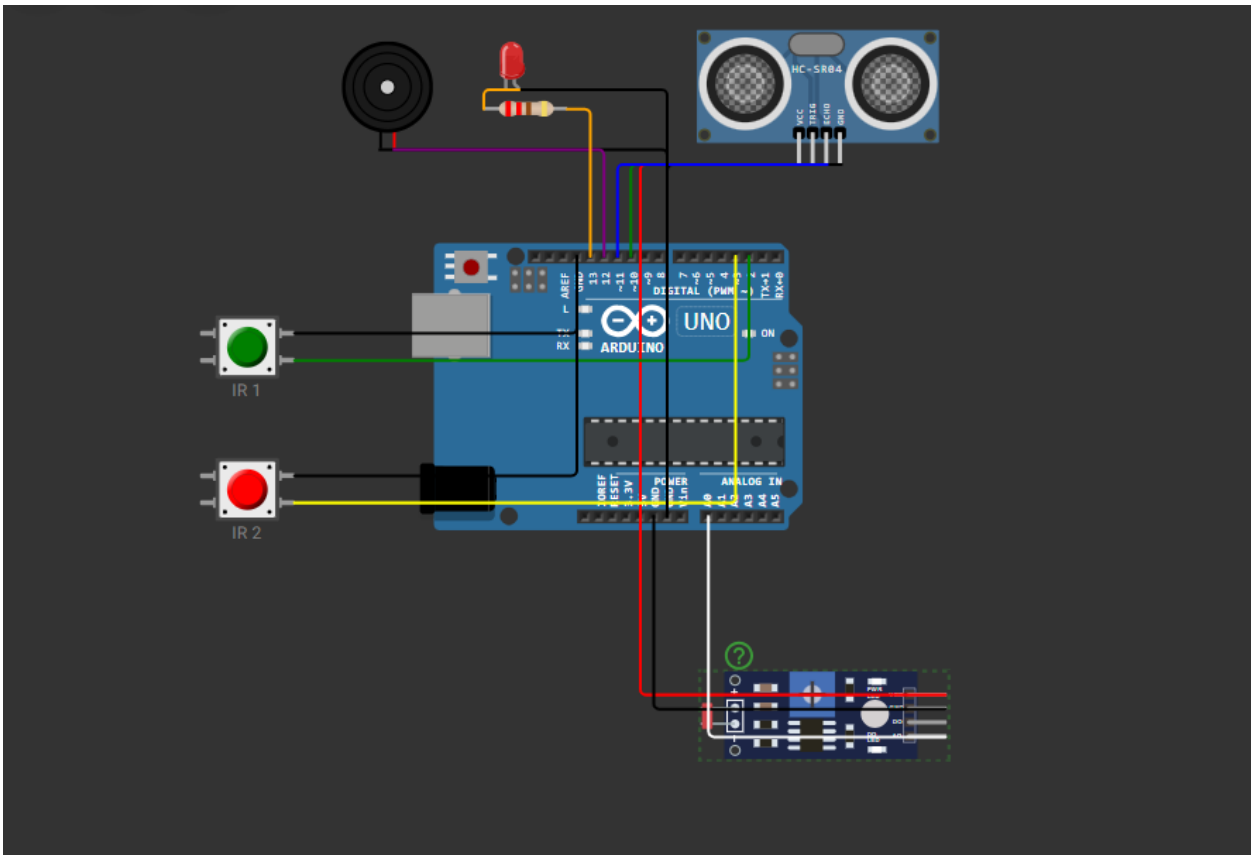

Pseudocode:

```
BEGIN

  CONSTANTS:
    sensor1 = pin 2,  sensor2 = pin 3
    trigPin = pin 10, echoPin = pin 11
    buzzer  = pin 12, led     = pin 13
    ldrPin  = A0
    distanceBetweenSensors = 0.10 m
    speedLimit             = 10.0 km/h

  VOLATILE VARIABLES:
    time1, time2           : unsigned long = 0
    firstTriggered         : bool = FALSE
    secondTriggered        : bool = FALSE
    ultrasonicTriggered    : bool = FALSE

  -- Interrupt Service Routines --

  ISR sensor1Trigger():
    IF NOT firstTriggered THEN
      time1 <- micros()
      firstTriggered <- TRUE
```

```
ISR sensor2Trigger():
  IF firstTriggered AND NOT secondTriggered THEN
    time2 <- micros()
    secondTriggered <- TRUE

-- Setup --

SETUP:
  SET sensor1, sensor2 as INPUT
  SET trigPin as OUTPUT ; echoPin as INPUT
  SET buzzer, led as OUTPUT
  ATTACH INTERRUPT pin2  FALLING -> sensor1Trigger
  ATTACH INTERRUPT pin3  FALLING -> sensor2Trigger
  INIT Serial at 9600 baud

-- Helper function --

FUNCTION getDistance() RETURNS cm:
  PULSE trigPin HIGH for 10 microseconds
  duration <- pulseIn(echoPin, HIGH)
  RETURN duration * 0.034 / 2

-- Main Loop (repeats forever) --

LOOP:

  dist <- getDistance()
  IF 2 < dist < 100 THEN
    ultrasonicTriggered <- TRUE

  raw        <- analogRead(ldrPin)
  lightValue <- 1023 - raw            // software inversion fix
  isNight    <- (lightValue < 400)

  IF firstTriggered AND secondTriggered AND ultrasonicTriggered THEN

    timeTaken <- (time2 - time1) / 1,000,000   // microseconds -> seconds

    IF timeTaken > 0 THEN
      speed <- (distanceBetweenSensors / timeTaken) * 3.6   // m/s -> km/h

      PRINT "VEHICLE DETECTED"
      PRINT "Time:"      timeTaken  "sec"
      PRINT "Speed:"     speed      "km/h"
      PRINT "LDR_RAW:"   raw
      PRINT "LDR_FIXED:" lightValue
      PRINT "Light:"     IF isNight THEN "Night" ELSE "Day"

      IF speed > speedLimit THEN
        PRINT "STATUS: OVER SPEED!"
        SET buzzer HIGH ; SET led HIGH
      ELSE
        PRINT "STATUS: Normal"
        SET buzzer LOW  ; SET led LOW

    WAIT 1000 ms

    RESET firstTriggered    <- FALSE
```

```
      RESET secondTriggered   <- FALSE
      RESET ultrasonicTriggered <- FALSE

  END LOOP

END
```

Output Pictures with explanations:

The following screenshots are taken from the React-based Arduino Sensor Dashboard running in Demo / Synthetic-Data mode (10 synthetic vehicle detections pre-loaded). They represent the exact output the dashboard produces when live Arduino data is received over serial.

Figure 1: Screenshot 1 – Header & Summary Cards: Shows the dashboard title, the DEMO MODE badge, and 8 summary metric cards (Total Vehicles: 10, Over-speed Alerts: 4 highlighted in red, Night/Low-Light: 4, Average Speed: 11.6 km/h, Average Pulse Time: 0.038 s, Average LDR_FIXED: 599, Latest US Distance: 17 cm, Average US Distance: 30.5 cm). The Serial Output panel is visible below, showing STATUS: OVER SPEED!, Light: Night, and LDR readings.

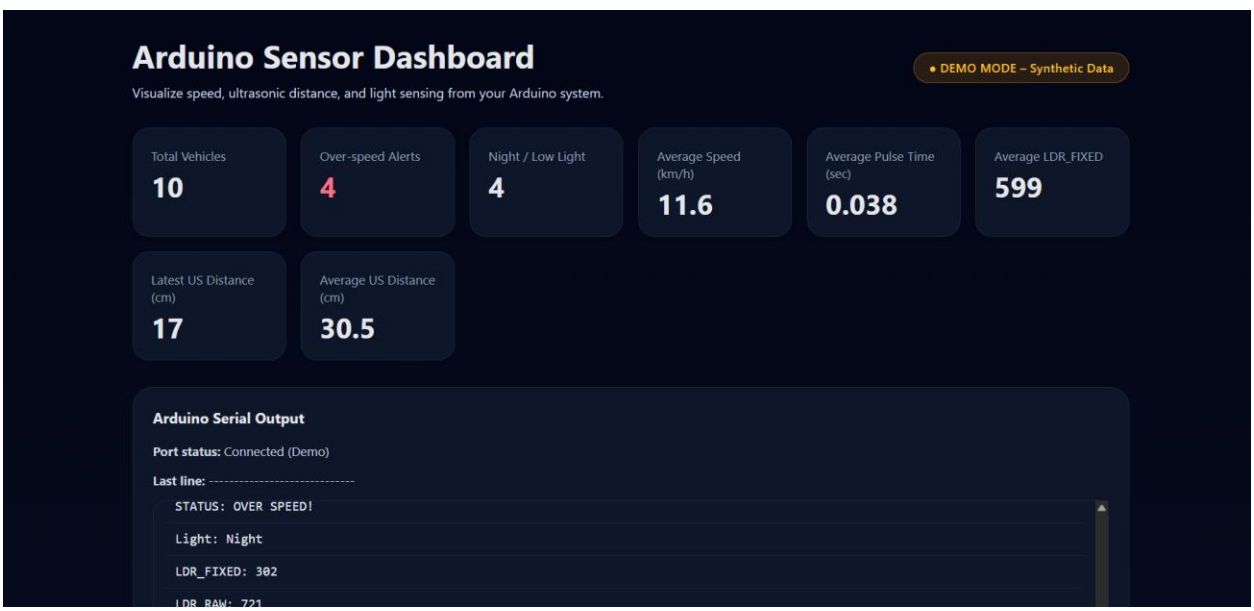

Figure 2: Screenshot 2 – Speed / LDR / Distance Trend (Line Chart): A multi-line Recharts graph. The amber line (LDR_FIXED) drops sharply from ~800 (Day, ~800 lux) to ~300 (Night, low light) between 08:22:18 and 19:45:02, visually marking the day-to-night transition. The Speed (indigo) and Distance (sky-blue) lines remain near the bottom of the scale.

Figure 3: Screenshot 3 – Speed Distribution (Bar Chart) & Table Header: Red bars show individual vehicle speeds per timestamp. Tall bars at 08:06:21 (14.8 km/h), 08:15:33 (18.3 km/h), 19:51:47 (21.6 km/h) and 20:04:10 (16.2 km/h) are the over-speed events. The table below begins listing readings with colour-coded status (green = Normal, red = Over Speed).

Figure 4: Screenshot 4 – Latest Arduino Readings Table (all 10 rows): Full data table with columns Received, Status, Light Mode, Speed (km/h), Time (sec), Distance (cm), LDR_FIXED,

LDR_RAW. Over-speed rows (08:06:21, 08:15:33, 19:51:47, 20:04:10) show status in red; normal rows are green. Distance values in red indicate proximity warnings (< 20 cm).

Latest Arduino Readings

RECEIVED	STATUS	LIGHT MODE	SPEED (KM/H)	TIME (SEC)	DISTANCE (CM)	LDR_FIXED	LDR_RAW
08:01:12	Normal	Day	7.2	0.050000	34	812	211
08:03:44	Normal	Day	9.1	0.039560	28	798	225
08:06:21	Over Speed	Day	14.8	0.024324	22	805	218
08:10:05	Normal	Day	6.4	0.056250	41	790	233
08:15:33	Over Speed	Day	18.3	0.019672	19	820	203
08:22:18	Normal	Day	8.7	0.041379	30	771	252
19:45:02	Normal	Night	5.9	0.061017	55	310	713
19:51:47	Over Speed	Night	21.6	0.016667	12	295	728
19:58:30	Normal	Night	7.5	0.048000	47	302	721
20:04:10	Over Speed	Night	16.2	0.022222	17	289	734