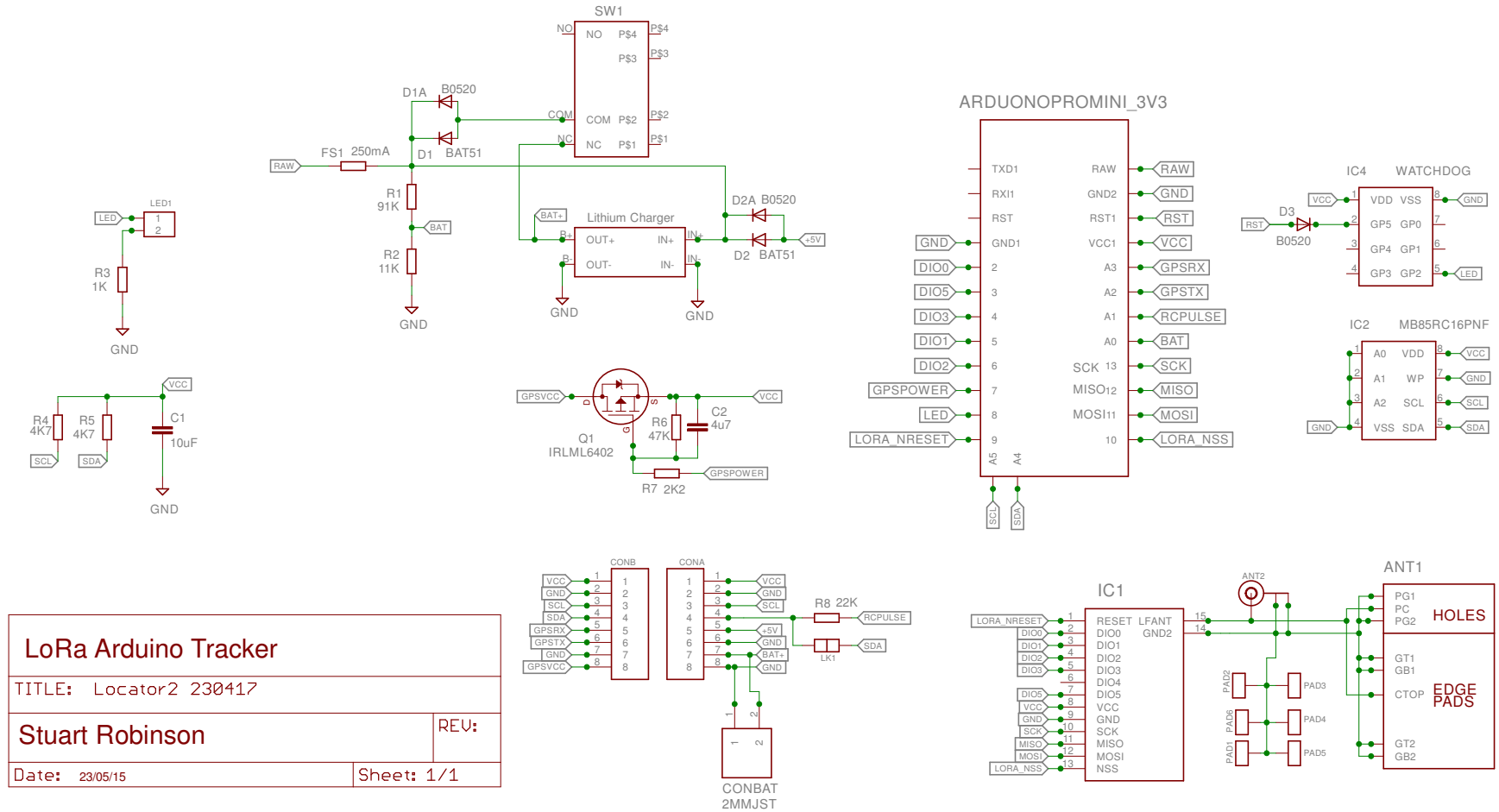

LoRa Arduino Tracker

TITLE: Locator2 230417

Stuart Robinson

REV:

Date: 23/05/15

Sheet: 1/1