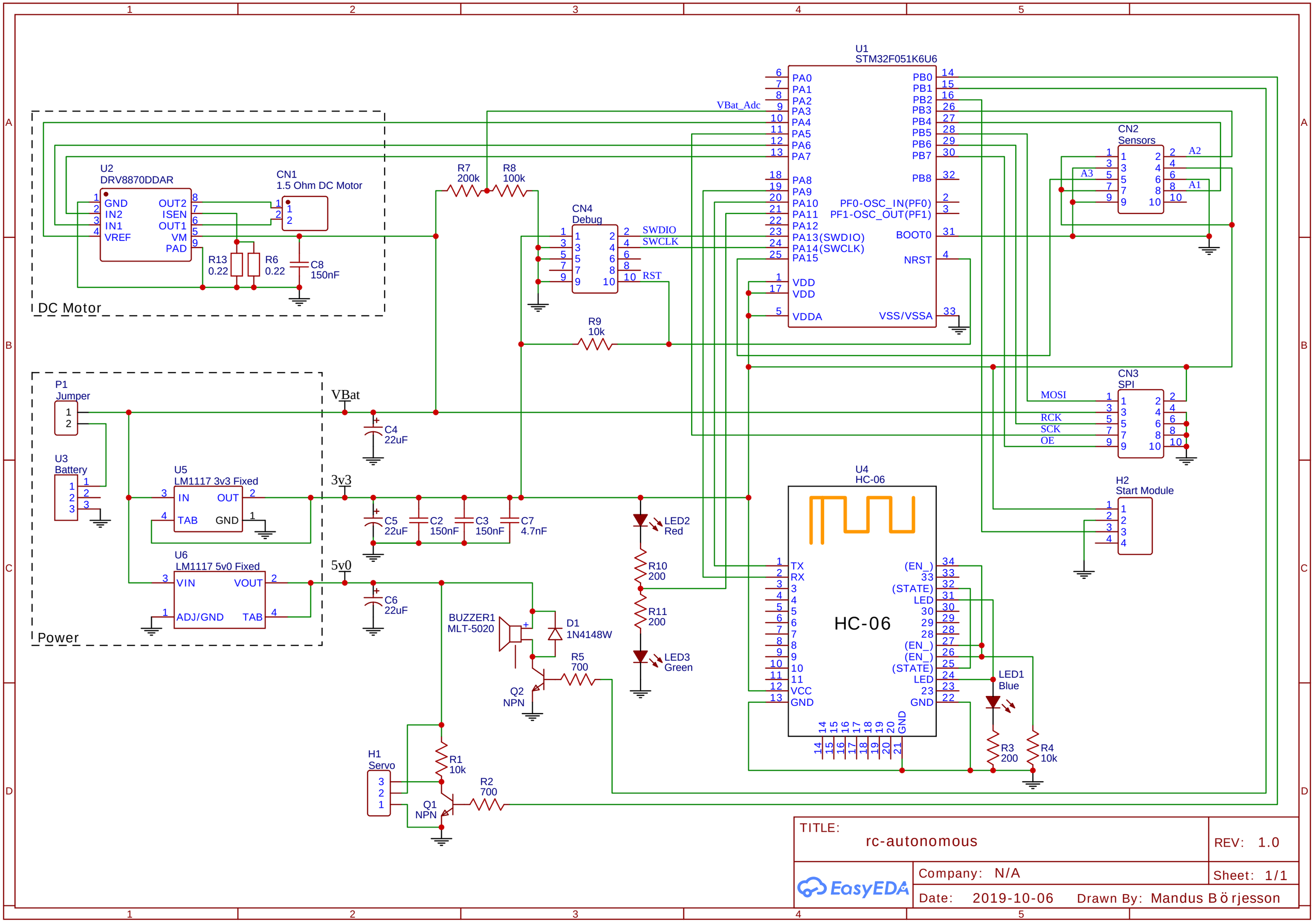
U1
STM32F051K6U6
PA0
PA1
PA2
PA3
PA4
PA5
PA6
PA7
PA8
PA9
PA10
PA11
PA12
PA13(SWDIO)
PA14(SWCLK)
PA15
VDD
VDD
VDDA
PB0
PB1
PB2
PB3
PB4
PB5
PB6
PB7
PB8
PF0-OSC_IN(PF0)
PF1-OSC_OUT(PF1)
BOOT0
NRST
VSS/VSSA
VBat_Adc
U2
DRV8870DDAR
GND
IN2
IN1
VREF
OUT2
ISEN
OUT1
VM
PAD
CN1
1.5 Ohm DC Motor
R13
0.22
R6
0.22
C8
150nF
DC Motor
R7
200k
R8
100k
CN4
Debug
SWDIO
SWCLK
RST
R9
10k
CN2
Sensors
A2
A3
A1
CN3
SPI
MOSI
RCK
SCK
OE
H2
Start Module
P1
Jumper
VBat
C4
22uF
U3
Battery
U5
LM1117 3v3 Fixed
IN
OUT
TAB
GND
3v3
C5
22uF
C2
150nF
C3
150nF
C7
4.7nF
U6
LM1117 5v0 Fixed
VIN
VOUT
ADJ/GND
TAB
5v0
C6
22uF
Power
LED2
Red
R10
200
R11
200
LED3
Green
BUZZER1
MLT-5020
D1
1N4148W
R5
700
Q2
NPN
H1
Servo
R1
10k
R2
700
Q1
NPN
U4
HC-06
HC-06
TX
RX
VCC
GND
(EN_)
(STATE)
LED
LED1
Blue
R3
200
R4
10k
TITLE:
rc-autonomous
REV: 1.0
Company: N/A
Sheet: 1/1
Date: 2019-10-06
Drawn By: Mandus Börjesson
EasyEDA