DATN / PLC_1 [CPU 1214C DC/DC/DC] / Program blocks

Modbus_TCP [FC1]

Modbus_TCP Properties							
General							
Name	Modbus_TCP	**Number**	1	**Type**	FC	**Language**	LAD
Numbering	Automatic						
Information							
Title		**Author**		**Comment**		**Family**	
Version	0.1	**User-defined ID**					

Modbus_TCP			
Name	**Data type**	**Default value**	**Comment**
Input			
Output			
InOut			
Temp			
Constant			
Return			
Modbus_TCP	Void		

Network 1:

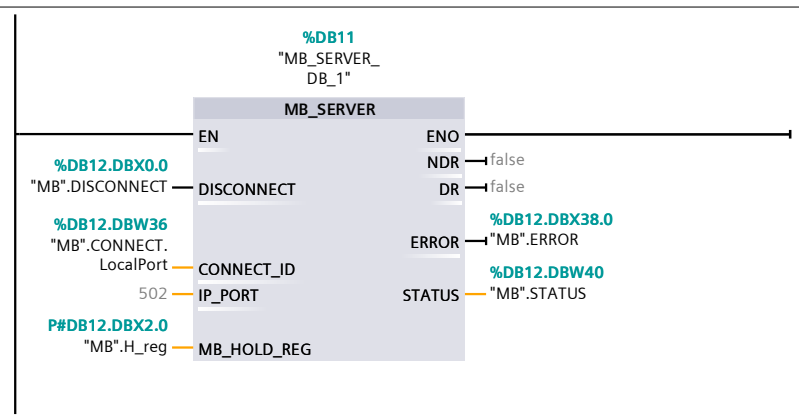
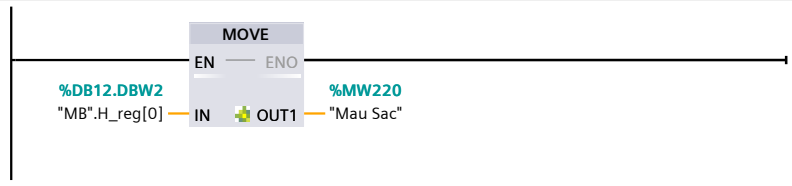
Network 2: