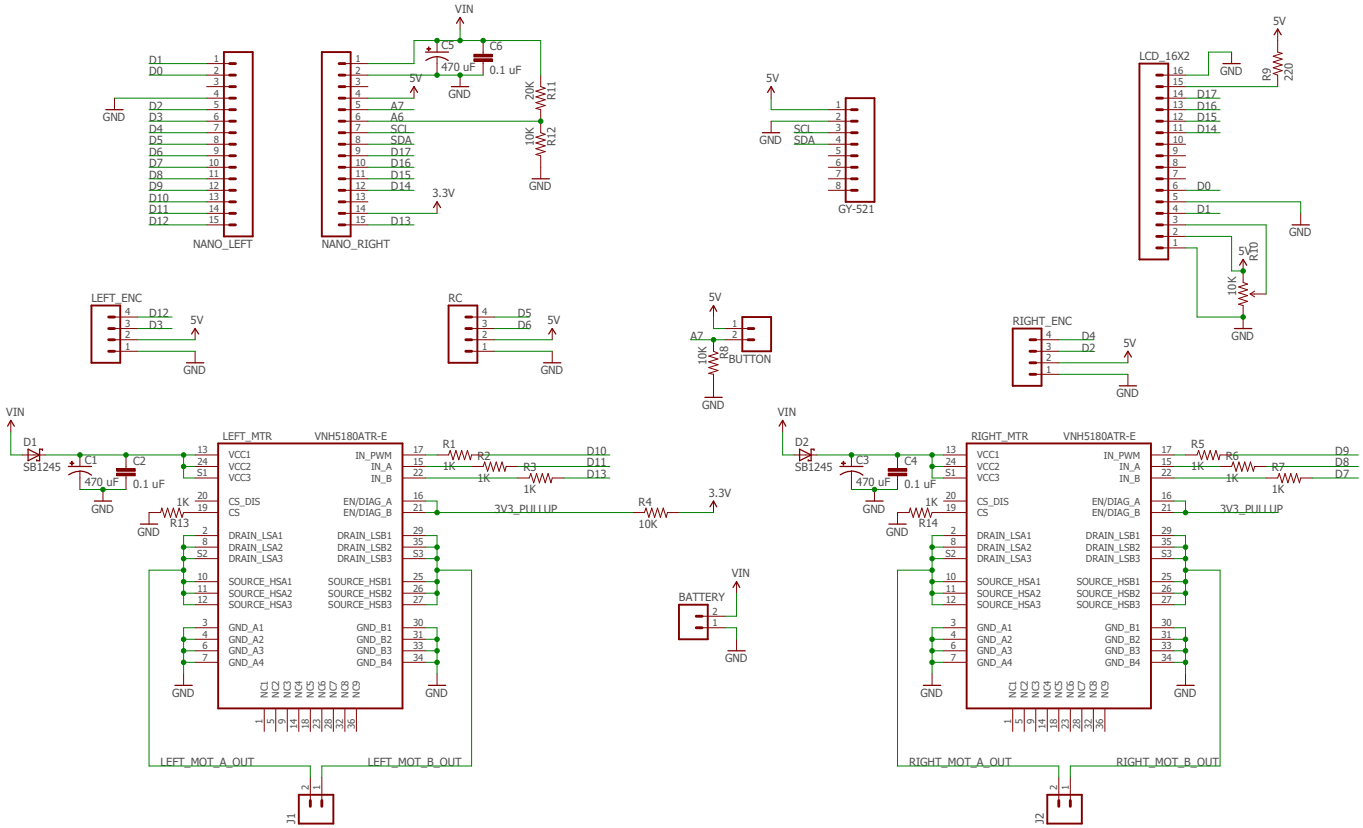

Released under the Creative Commons
Attribution Share-Alike 4.0 License
https://creativecommons.org/licenses/by-sa/4.0/

TITLE: ZippyTheBalancingRobot

Design by: L. McGovern

REV:

Date: 4/1/2017 4:05 PM

Sheet: 1/1