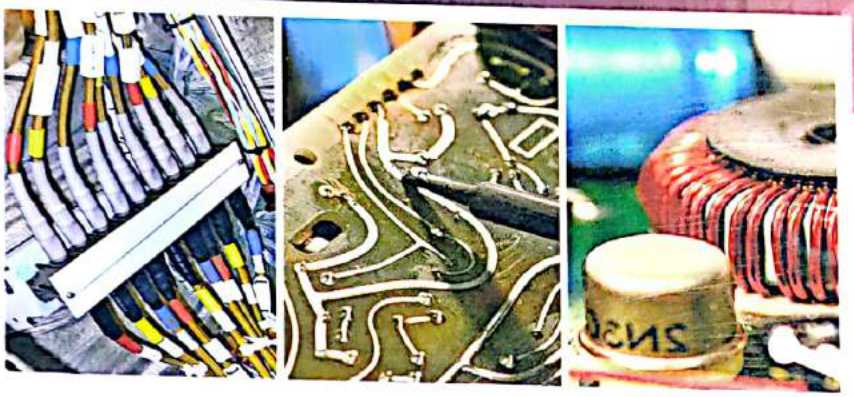

With Solved University Question Papers upto Dec-2020

As Per Revised Syllabus of
**Gujarat Technological University**

# BASIC ELECTRICAL ENGINEERING

For Degree Engineering Students Sem. 1 & 2

▪ Dr. D. M. PATEL

ATUL PRAKASHAN ™
GANDHI ROAD, AHMEDABAD.

Scanned with CamScanner

According to the New Revised Syllabus of Gujarat Technological University, Useful for the First Year B.E. Students (All Branches)

Subject Code : 3110005

# Basic Electrical Engineering

**Group-1 :**

Aeronautical, Automobile, Biotechnology, Chemical, Civil, Environmental, Food Processing and Technology, industrial, Environment Science and Technology, Chemical Technology, Nano Technology, Civil & Infrastructure Engineering, Robotics & Automation.

**Group-2 :**

Bio Medical, Computer, Electrical & Electronics, Electrical, Electronics, Electronics & Communication, Information Technology, Instrumentation & Control Engineering, Information & Communication Technology, Computer Science and Engineering, Power Electronics

**Author**

**Dr. D. M. PATEL**
Principal
**D. A. Degree Engineering & Technology**
Near Khatraj Chokadi, At. Mahemdabad, Kheda, Gujarat

**Forth Edition : 2021-'22**

**Price : ₹ 360-00**

ATUL PRAKASHAN
GANDHI ROAD, AHMEDABAD.



Scanned with CamScanner

*Publishers :*

**ATUL PRAKASHAN**

Under Farnandis Bridge, Gandhi Road, Ahmedabad-380 001.
Phone : 26424342, 22160475, 22141244

**Forth Edition : 2021-'22**

**Price : ₹ 360-00**

**ISBN No. 978-93-85173-43-1**

***Copyright :***

@ All rights reserved. No part of this publication may be reproduced, stored in a retrieval system or transmitted in any form or by any means, electronic, mechanical photocopying, recording or otherwise without the prior consent of the Publisher and Author.

***Disclaimer :***

Every care has been taken by the author and publisher to give correct, complete and updated information. In case there is any omission, printing mistake or any other error might have crept in inadvertently, either the author not the publisher take any legal responsibility.

*Type Setting :*

**Netarwala Graphics**

Opp. Chaudhriwas, Jamalpur Chakla, Ahmedabad.

*Printed By :*

**Ashish Offset**

5-B, Mahalxmi Compound, Near Kalpana Bhumi Estate, Opp. Rustom Mills, Dudheshwar, Ahmedabad.



Scanned with CamScanner

# Preface ...

The importance of electricity is well known in the various field of the engineering. It is necessary for an engineer of any branch to know the basic concept of the Electrical Engineering. With this intention the subject of **"Basic Electrical Engineering"** is included as one of the compulsory subject in the first year of all degree courses in engineering.

The titled **"Basic Electrical Engineering"** is designed to meet the new syllabus requirements of the first year Engineering students of Gujarat Technological University, Gandhinagar.

I have no doubt to present new edition will be liked by all the readers.

I wish to express sincere thanks to all who helped in making this book a reality. Lastly but not least. I am very thankful to **Shri Hemendrabhai Shah** and **Shri Bipinbhai Shah** of **M/S Atul Prakashan** for taking pain in publishing this book.

Useful and Constructive Suggestion from the readers for further improvement of this book will be appreciated.

**Place : Mahemdabad** — **Dr. D. M. Patel**

**May-2021**



Scanned with CamScanner

# GUJARAT TECHNOLOGICAL UNIVERSITY

**Subject Name : Basic Electrical Engineering**

**Subject Code : 3110005**

**Teaching and Examination Scheme :**

| Teaching Scheme | | | Credits | Examination Marks | | | | Total Marks |
|---|---|---|---|---|---|---|---|---|
| | | | | Theory Marks | | Practical Marks | | |
| L | T | P | C | ESE (E) | PA (M) | ESE (V) | PA (I) | |
| 3 | 0 | 2 | 4 | 70 | 30 | 30 | 20 | 150 |

**Content :**

| Sr. No. | Topics | Total Hrs. | Module Weightage |
|---|---|---|---|
| 1. | **D. C. CIRCUITS**<br>Electrical circuit elements (R, L and C), voltage and current sources, Kirchoff's current and voltage laws, analysis of simple circuits with dc excitation.<br>Superposition, Thevenin and Norton Theorems. Time-domain analysis of first-order RL and RC circuits. | 8 | 20 |
| 2. | **A. C. CIRCUITS**<br>Representation of sinusoidal waveforms, peak and RMS values, Phasor representation of AC quantities, real power, reactive power, apparent power, power factor.<br>Analysis of single-phase a.c. circuits consisting of R, L, C, RL, RC, RLC combinations (series and parallel), Series and parallel resonance.<br>Three phase balanced circuits, voltage and current relations in star and delta connections, power measurement in three phase circuits. | 10 | 25 |
| 3. | **TRANSFORMERS**<br>Magnetic materials, BH characteristics. Construction and working principle of single phase and three phase transformers. Ideal and practical transformer, Auto-transformer and its application. | 8 | 15 |
| 4. | **ELECTRICAL MACHINES**<br>Generation of rotating magnetic fields.<br>Construction and working of following machines :<br>• Three-phase induction motor<br>• Single-phase induction motor<br>• Separately excited DC motor<br>• Synchronous generators | 8 | 15 |
| 5. | **ELECTRICAL INSTALLATIONS :**<br>Components of LT Switch Fuse Unit (SFU), MCB, ELCB, MCCB.<br>Types of Wires and Cables :<br>• Earthing – Types of earthing and its importance.<br>• Safety precautions for electrical appliances.<br>• Types of Batteries, Important Characteristics for Batteries.<br>• Elementary calculations for energy consumption.<br>• Basic of power factor improvement. | 8 | 20 |



Scanned with CamScanner

# Index ...


1. D.C. CIRCUITS ..... 1 – 105
   - 1.1 Introduction ..... 2
   - 1.2 Electrical Potentials ..... 2
   - 1.3 Potential Difference (P.D.) ..... 2
   - 1.4 Electromotive Force (e.m.f) ..... 2
   - 1.5 Electric Current ..... 3
   - 1.6 Resistance ..... 4
   - 1.7 Inductor ..... 5
     - 1.7.1 Types of Inductor ..... 6
     - 1.7.2 Voltage and Current Equation ..... 6
     - 1.7.3 Power Absorbed by Inductor ..... 6
     - 1.7.4 Energy Stored by the Inductor ..... 6
     - 1.7.5 Inductors in Series ..... 6
     - 1.7.6 Inductors in Parallel ..... 7
   - 1.8 Capacitor ..... 7
     - 1.8.1 Voltage and Current Equation ..... 7
     - 1.8.2 Power Absorbed by Capacitor ..... 8
     - 1.8.3 Energy Stored by Capacitor ..... 8
     - 1.8.4 Capacitors in Series ..... 8
     - 1.8.5 Capacitors in Parallel ..... 8
     - 1.8.6 Types of Capacitor ..... 8
   - 1.9 Factors Affecting the Resistance Value ..... 10
   - 1.10 Resistivity or Specific Resistance ($\rho$) ..... 11
   - 1.11 Ohm's LAW ..... 14
   - 1.12 Power and Energy in Simple Electrical Circuit ..... 15
   - 1.13 Series Circuit (Resistances Connected in Series) ..... 18
   - 1.14 Parallel Circuit (Resistances Connected in Parallel) ..... 19
   - 1.15 Comparison of Series and Parallel Circuits ..... 21
   - 1.16 Series - Parallel Connections of Resistors ..... 21
   - 1.17 Delta-Star and Star-Delta Transformation ..... 26
     - 1.17.1 Delta-Star Transformation ..... 27
     - 1.17.2 Star-Delta Transformation ..... 28
   - 1.18 Network Terminology ..... 41
   - 1.19 Kirchhoff's Laws ..... 42
   - 1.20 Sources of Electrical Energy ..... 46
   - 1.21 Mesh Analysis ..... 49
     - 1.21.1 Mesh Analysis by Inspection Method ..... 49
   - 1.22 Node Analysis ..... 54
     - 1.22.1 Node Analysis by Inspection Method ..... 55




Scanned with CamScanner

1.23 Superposition Theorem ..... 59
1.24 Thevenin's Theorem ..... 65
1.25 Norton's Theorem ..... 81
1.26 Time-domain Analysis of First Order R-L Circuit ..... 90
1.27 Decay of Current in an Inductive Circuit ..... 92
1.28 Time-domain Analysis of First Order R-C Circuit ..... 95
* Exercise ..... 98
* Tutorial Problems ..... 99
* GTU Questions and Answers ..... 102

**2. A.C. CIRCUITS ..... 106 – 210**

## UNIT-I : SINGLE PHASE A. C. CIRCUIT

**A. C. Fundamentals**

2.1 Introduction ..... 108
2.2 Types of Currents ..... 108
2.3 Comparison of A.C. with D.C. ..... 109
2.4 Important Terms Related to Alternating Quantities ..... 109
2.5 Generation of Alternating voltage ..... 112
2.6 Equation of alternating voltage (E.M.F.) ..... 113
2.7 Average Value ..... 114
2.7.1 Expression for Average Value of Sinusoidal Alternating Current ..... 115
2.7.2 Average Value of Half-Wave Rectified Current ..... 116
2.8 Root Mean Square Value (RMS) Value ..... 116
2.8.1 R.M.S. Value of an a.c. Sinusoidal Wave ..... 117
2.8.2 R.M.S. Value of Half Rectified Sinusoidal Current ..... 118
2.9 Form Factor ..... 119
2.10 Peak Factor ..... 119
2.11 Phasor Representation of AC Quantity ..... 129
2.12 Addition and Subtraction of Alternating Quantities ..... 130
2.12.1 Addition of Alternating Quantities ..... 130
2.12.2 Subtraction of Alternting Quantities ..... 132
2.13 Representation of Phasors ..... 132
2.13.1 Rectangular Form ..... 132
2.13.2 Trigonometrical Form ..... 133
2.13.3 Exponential Form ..... 133
2.13.4 Polar Form ..... 133
2.13.5 Transformation of Vector From One Form into other ..... 133

**Analysis of A. C. Circuits**

2.14 Purely Resistive Circuit ..... 138
2.15 Purely Inductive Circuit ..... 140
2.15.1 Concept of Inductive Reactance ($X_L$) ..... 141



Scanned with CamScanner

2.15.2 Definition of $X_L$ ..... 142
2.15.3 Power in Purely Inductive Circuit ..... 142
2.15.4 Power Waveform for purely inductive circuit ..... 143
2.15.5 Power Factor ..... 143
2.16 Purely Capacitive Circuit ..... 145
2.16.1 Power in Purely Capacitive Circuit ..... 147
2.16.2 Power Waveform for Purrely Capacitive Circuit ..... 147
2.16.3 Power Factor ..... 148

**A. C. Series Circuits**

2.17 R-L Series Circuit ..... 150
2.18 Active and Reactive Components of Current ..... 152
2.19 Active. Reactive & Apparent Power ..... 153
2.20 Power Factor in A.C. Circuits ..... 157
2.21 R-C Series Circuit ..... 158
2.21.1 Instantaneous Power ..... 159
2.21.2 Average Power ..... 159
2.21.3 Power Factor ..... 159
2.22 R-L-C Series Circuit ..... 162
2.23 Resonance in R-L-C Series Circuit ..... 164
2.24 Q-Factor of a Series Resonant Circuit ..... 165
2.24.1 Graphic Representation of Series Resonance ..... 166
2.24.2 Bandwith of Resonant Circuit ..... 168

**A. C. Parallel Circuits**

2.25 Methods of Solving Parallel Circuits ..... 177
2.25.1 Phasor Method ..... 177
2.25.2 Admittance Method ..... 179
2.25.3 Complex Algebra Method ..... 180
2.26 Resonance In parallel Circuit ..... 181
2.27 Comparison Between Series and Parallel Resonance ..... 183

**UNIT-II : THREE PHASE A.C. CIRCUIT**

**Three Phase A.C. Circuit**

2.28 Generation of Three Phase EMF ..... 189
2.29 Phase Sequence ..... 190
2.30 Interconnection of Three Phases ..... 190
2.31 Star Connection ..... 191
2.32 Balanced and Unbalanced Loads ..... 191
2.33 Important Definitions ..... 191
2.34 Voltage and Current Relationships in Star Connection ..... 192
2.34.1 Power ..... 194



Scanned with CamScanner

2.35 Delta Connection ..... 194
2.35.1 Voltage and Current Relation in Delta Connected System ..... 195
2.35.2 Power ..... 196
2.36 Comparison of Star and Delta Connected System ..... 197
2.37 Measurement of Power in 3-phase System ..... 197
2.37.1 One Wattmeter Method ..... 197
2.37.2 Three Wattmeter Method ..... 198
2.37.3 Two Wattmeter Method ..... 198
2.38 Measurement of Power and Power Factor by Two Wattmeter Method ..... 198
* Exercise ..... 206
* GTU Questions and Answers ..... 207

**3. TRANSFORMERS ..... 211 – 249**

3.1 Introduction ..... 212
3.2 Magnetic Field ..... 212
3.3 Magnetic Flux ..... 212
3.4 Electromagnet ..... 212
3.5 Magnetic Flux Density (B) ..... 213
3.6 Magnetomotive Force (M.M.F) ..... 213
3.7 Magnetic Field Intensity (H) ..... 213
3.8 Permeability ..... 214
3.8.1 Relative Permeability ..... 214
3.9 Reluctance ..... 214
3.10 Relation Between B and H ..... 214
3.11 Classification of Magnetic Materials ..... 215
3.12 Magnetisation Curve ( B-H Curve) ..... 215
3.13 Electromagnetic Induction ..... 216
3.14 Faradays Laws of Electromagnetic Induction ..... 216
3.14.1 Faradays Laws ..... 216
3.15 Definition of Transformer ..... 218
3.16 Importance of Transformer in Transmission of Electricity ..... 218
3.17 Symbolic Representation of Transformer ..... 218
3.18 Working Principle of a Transformer ..... 219
3.19 Construction of Transformer ..... 220
3.20 Comparison of Core and Shell Type Transformers ..... 222
3.21 E.M.F. Equation of Single Phase Transformer ..... 222
3.22 Voltage Transformation Ratio ..... 224
3.23 Ideal Transformer ..... 226
3.24 Comparison of Practical Transformer and Ideal Transformer ..... 227
3.25 Practical Transformer on No Load ..... 228
3.26 Transformer on Load ..... 228
3.27 Equivalent Resistances ..... 229
3.28 Equivalent Leakage Reactance ..... 231



Scanned with CamScanner

3.29 An Actual Transformer ..... 235
3.30 Equivalent Circuit of Transformer ..... 236
3.31 Losses in Transformer ..... 238
3.32 Efficiency of Transformer ..... 238
3.33 Autotransformer ..... 238
3.34 Advantages and Disadvantages of Autotransformer ..... 240
3.35 Application of Autotransformer ..... 240
3.36 Construction of Three Phase Transformer ..... 240
3.37 Types of Transformers ..... 242
3.38 Construction of Three Phase Transformer ..... 242
3.38.1 Accessories of Transformers ..... 242
3.39 Connections of Three-phase Transformers ..... 244
❊ Exercise ..... 247
❊ GTU Questions and Answers ..... 248

**4. ELECTRICAL MACHINES ..... 250 – 301**

4.1 Introduction ..... 251
4.2 Rotating Magnetic Field ..... 252
4.2.1 What is Rotating Magnetic Field ? ..... 252
4.2.2 Generation of Rotating Magneting Field ..... 252

**Three Phase Induction Motor**

4.3 3-phase Induction Motor ..... 255
4.4 Construction of Three Phase Induction Motor ..... 256
4.4.1 Stator ..... 256
4.4.2 Rotor ..... 256
4.4.3 Comparison Between Squirrel Cage and Slip Ring Induction Motor ..... 259
4.5 Synchronous Speed ..... 259
4.6 Working Principle of Three Phase Induction Motor ..... 260
4.7 Slip ..... 260
4.8 Frequency of Rotor Current ..... 260
4.9 Starting Torque ..... 262
4.9.1 Derivation of Starting Torque ..... 262
4.10 Running Torque ..... 263
4.10.1 Derivation of Running Torque ..... 263
4.11 Torque – Slip Characteristic ..... 263
4.12 Torque – Speed Characteristic ..... 264
4.13 Equivalent Circuit of 3-Phase Induction Motor ..... 265
4.14 Transformer Equivalent circuit of Induction Motor ..... 265
4.15 Advantages of 3-Phase Induction Motor ..... 266
4.16 Disadvantages of 3-Phase Induction Motor ..... 266
4.17 Application of 3-phase induction motor ..... 266

**Single Phase Induction Motor**

4.18 Single Phase Induction Motor Principle ..... 267
4.19 Making Self Starting of 1-Phase Induction Motor ..... 267



Scanned with CamScanner

4.20 Types of Single Phase Induction Motor ..... 267
4.20.1 Shaded Pole Single Phase Induction Motor ..... 267
4.20.2 Resistance Start (Split-Phase) Single Phase Induction Motor ..... 270
4.20.3 Capacitor Start Single Phase Induction Motor ..... 271
4.20.4 Capacitor Run Single Phase Induction Motor ..... 272
4.20.5 Capacitor Start Capacitor Run Single Phase Induction Motor (Double Value) ..... 272
4.21 Applications of Single Phase Induction Motor ..... 273

**Separately Excited D.C. Motor**

4.22 D.C. Machine ..... 274
4.23 Working Principle of a D.C. Generator ..... 274
4.24 Parts of the D.C. Machine ..... 274
4.25 D.C. Motor ..... 278
4.26 D.C. Motor Principle ..... 278
4.27 Back EMF ..... 278
4.28 Torque Equation of a D.C. Motor ..... 279
4.29 Classification of D.C. Motors ..... 280
4.30 Separately Excited DC Motor ..... 280
4.31 Characteristics of Separately Excited D.C. Motors ..... 281
4.31.1 Torque – Armature current Characteristics ..... 281
4.31.2 Speed (N) and the armature current ($I_a$) Characteristics and Speed (N) and torque (T) Characteristics ..... 282
4.32 Speed Control of Separately Excited D.C. Motor ..... 282
4.32.1 Speed Control of Separately Excited D.C. Motor ..... 282
4.32.2 Field Control ..... 283
4.32.3 Voltage Control Method ..... 284
4.33 Advantages of Separately Excited d.c. Motor ..... 284
4.34 Disadvantages of Separately Excited d.c. Motor ..... 284
4.35 Applicaiton of Separately Excited d.c. Motor ..... 284

**Synchronous Generator**

4.36 Synchronous Generator ..... 284
4.37 Construction of Synchronous Generator ..... 284
4.38 Working Principle of Synchronous Generator ..... 286
4.39 Working of Synchronous Generator ..... 286
4.40 EMF Equation of Synchronous Generator ..... 286
4.41 Distributed Winding and Concentrated Winding ..... 287
4.42 Distribution Factor ..... 287
4.43 Full Pitch Winding and Short Pitch Winding ..... 288
4.44 Coil Span Factor ..... 288
4.45 Vector Diagrams of Synchronous Generator ..... 290
4.46 Voltage Regulation of Synchronous Generator ..... 292
4.47 Methods of Determining Voltage Regulation of Synchronous Generator ..... 293



Scanned with CamScanner

4.48 Applications of Synchronous Generator ..... 297
❊ Exercise ..... 298
❊ GTU Questions and Answers ..... 299

**5. ELECTRICAL INSTALLATIONS ..... 302 – 338**

5.1 Switch Fuse Unit (SFU) ..... 303
5.2 Types of Electrical Fuse ..... 303
5.3 Miniature Circuit Breaker (MCB) ..... 305
5.4 Comparison Between Fuse and MCB ..... 307
5.5 Earth Leakage Circuit Breaker (ELCB) ..... 307
5.6 Moulded Case Circuit Breakers (MCCB) ..... 309
5.6.1 Thermal Mangetic Release MCCB ..... 309
5.6.2 Electronic Release MCCB ..... 310
5.6.3 Mircroprocessor Release MCCB ..... 310
5.7 Electrical Wires ..... 311
5.7.1 Types of Wires ..... 311
5.8 Types of Cables ..... 313
5.8.1 Construction of Cables ..... 313
5.8.2 Classification of Cables ..... 314
5.9 Earthing ..... 315
5.9.1 Various Methods of Earthing ..... 316
5.10 Safety Precaution for Electrical Appliances ..... 318
5.11 Batteries ..... 319
5.12 Lead-acid Battery ..... 320
5.13 Life of Battery ..... 322
5.14 Efficiency of Battery ..... 323
5.15 Charging Methods ..... 323
5.16 Important Characteristics of Batteries ..... 324
5.17 Power Rating of Electrical Appliances ..... 326
5.18 Power Factor ..... 331
5.19 What is the Meaning of Poor Power Factor ? ..... 331
5.20 Methods of Improving Power Factor ..... 332
❊ Exercise ..... 336
❊ GTU Questions and Answers ..... 337

■ **SOLVED GTU QUESTION PAPERS ..... 339 – 364**

January-2019 ..... 339
May-2019 ..... 345
January-2020 ..... 351
December-2020 ..... 357

■ ❊ ■

**TO THE READERS**

Author and publisher would welcome suggestions towards future edition of this book or the pointing out of any misprint or obscurity. Please write to The Technical Editor, ATUL PRAKASHAN, Under Farnandis Bridge, Gandhi Road, Ahmedabad-1.



Scanned with CamScanner

CHAPTER 1

# D. C. Circuits

**Contents**


1.1 Introduction
1.2 Electrical Potentials
1.3 Potential Difference (P.D.)
1.4 Electromotive Force (e.m.f)
1.5 Electric Current
1.6 Resistance
1.7 Inductor
 1.7.1 Types of Inductor
 1.7.2 Voltage and Current Equation
 1.7.3 Power absorbed by inductor
 1.7.4 Energy stored by the inductor
 1.7.5 Inductors in Series
 1.7.6 Inductors in Parallel
1.8 Capacitor
 1.8.1 Voltage and Current Equation
 1.8.2 Power Absorbed by Capacitor
 1.8.3 Energy Stored by Capacitor
 1.8.4 Capacitors in Series
 1.8.5 Capacitors in Parallel
 1.8.6 Types of Capacitor
1.9 Factors Affecting the Resistance Value ..... 2011
1.10 Resistivity or Specific Resistance (ϱ) ..... 2010
1.11 Ohm's LAW ..... 2015, 2016, 2017, 2020
1.12 Power and Energy in Simple Electrical Circuit
1.13 Series Circuit (Resistances Connected in Series) ..... 2015
1.14 Parallel Circuit (Resistances Connected in Parallel) ..... 2015
1.15 Comparison of Series and Parallel Circuits ..... 2019
1.16 Series - Parallel Connections of Resistors
1.17 Delta-Star and Star-Delta Transformation
 1.17.1 Delta-Star Transformation ..... 2015. 2016, 2018
 1.17.2 Star-Delta Transformation ..... 2015, 2017, 2018, 2020
1.18 Network Terminology
1.19 Kirchhoff's Laws ..... 2015, 2017, 2019, 2020
1.20 Sources of Electrical Energy
1.21 Mesh Analysis
 1.21.1 Mesh Analysis by Inspection Method
1.22 Node Analysis
 1.22.1 Node Analysis by Inspection Method
1.23 Superposition Theorem ..... 2020
1.24 Thevenin's Theorem ..... 2019, 2020
1.25 Norton's Theorem ..... 2020
1.26 Time-domain Analysis of First Order R-L Circuit
1.27 Decay of Current in an Inductive Circuit
1.28 Time-domain Analysis of First Order R-C Circuit ..... 2019, 2020
* Exercise
* Tutorial Problems
* GTU Questions and Answers


**G.T.U. QUESTION PAPER STATISTICAL ANALYSIS**

| | January-2019 | May-2019 | December-2020 |
|---|---|---|---|
| Marks | 21 | 14 | 17 |
| Repeated Questions Marks | – | 3 | 3 |

Scanned with CamScanner

## 1.1 INTRODUCTION :

- Electrical circuits are of different kinds, e.g. D.C. circuit, Magnetic circuit, Dielectric circuit, A.C. circuit etc. In order to understand all these circuits, study of d.c. circuit is essential and before studying the d.c. circuit, concepts of electric current, resistance, power, energy etc. should be clear.

## 1.2 ELECTRICAL POTENTIALS :

- When two similarly charged particles are brought near, they try to repel each other while dissimilar charges attract each other. This means, every charged particle has a tendency to do work.

**Definition of electric potential :**

- The ability of the charged body to do work is called electric potential.

$$\boxed{\text{Electric potential} = \frac{\text{Work done}}{\text{Charge}} \quad \text{OR} \quad V = \frac{W}{Q}} \qquad \text{... (1.1)}$$

- The work done is measured in joule and charge in coulomb.
- Therefore, the unit of electric potential is joule/coulomb or volt.

If W = 1 joule. Q = 1 coulomb. then.

$$\boxed{V = \frac{1}{1} = 1 \text{ Volt}} \qquad \text{... (1.2)}$$

**Definition of one Volt :**

- A body is said to have a potential of 1 volt, if 1 joule of work is done to give it a charge of 1 coulomb.

## 1.3 POTENTIAL DIFFERENCE (P.D.) :

- The difference in potentials of two charged bodies is called potential difference.
- Consider two bodies A and B having potentials 10 volts and 5 volts respectively as shown in Fig. 1.1.
- Each coulomb of charge on body A has an energy of 10 joules while each coulomb of charge on body B has an energy of 5 joules.
- So body A is at higher potential than body B and the potential difference between A and B is given by $V_{AB}$.

$$\therefore \quad V_{AB} = (V_A - V_B)$$
$$= 10 - 5$$
$$= 5 \text{ volts}$$

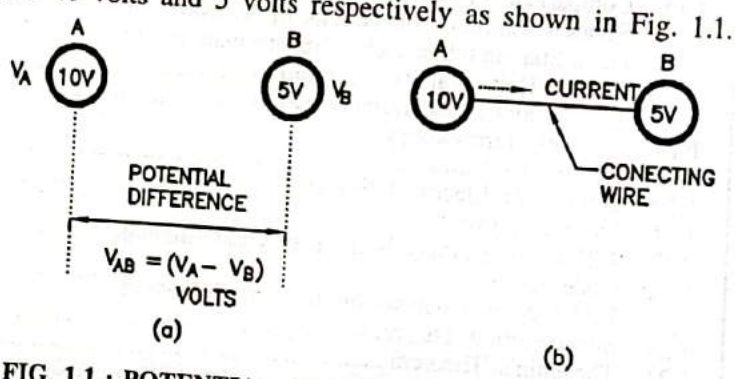


FIG. 1.1 : POTENTIAL AND POTENTIAL DIFFERENCE

- The potential difference is measured in volts.

**Positive and Negative P.D. :**

- If the potential at point A is higher than that at point B. i.e. if $V_A > V_B$ then the potential difference $V_{AB}$ will be positive.
- If the potential at point A is lower than that at point B. i.e. if $V_A < V_B$ then the potential difference $V_{AB}$ is negative.

## 1.4 ELECTROMOTIVE FORCE (E.M.F) :

- We know that current is a flow of electrons. Can electrons flow without applying any force ?
- Any substance can't move. If we do not apply any force on it. It's Newton first law.

Scanned with CamScanner

- Means if electrons are flowing in a circuit, there must to be a force, that cause the electrons to flow in a circuit. This force is applied by battery and it is called emf (electro motive force).

**Definition of Electromotive Force (emf) :**

- The force which causes current to flow in the circuit is called emf.
- It's symbol is E.
- It is measured in volts (V).
- The main sources of emf are primary and secondary cells, generators etc.

**Difference between EMF and Potential Difference :**

- Emf means electromotive force due to which charge can flow in the circuit. Where-as potential difference means the difference between the potential energy between the two points in a circuit. Unit of both are volt. But emf is cause and the potential difference is the effect.

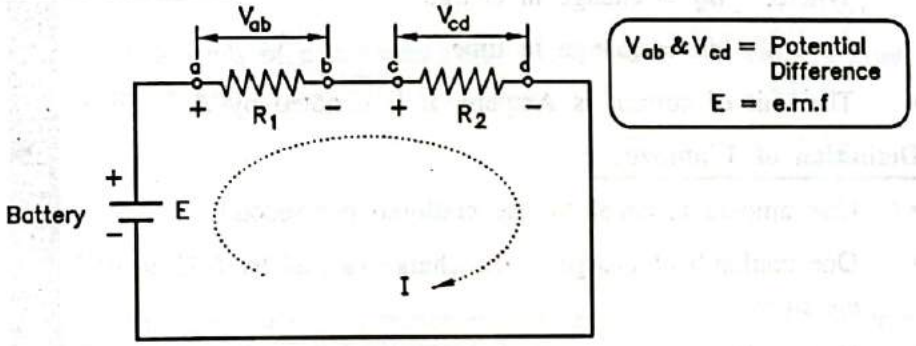


FIG. 1.2

- In Fig. 1.2 current of I ampere flows through the circuit due to emf $E$. Due to this current flow, potential difference $V_{ab}$ is produced across two terminals of resistor $R_1$ and potential difference $V_{cd}$ is produced across two terminals of resistor $R_2$.

## 1.5 ELECTRIC CURRENT :

- In metals (conducting materials) a large number of free electrons are available which move from one atom to the other at random as shown in Fig. 1.3.
- When electric potential is applied across the two ends of a conductor, free electrons move from one end to the other. Electron has electric charge. So charge move from one end to the other. Flow of these electrons or charge is called electric current.

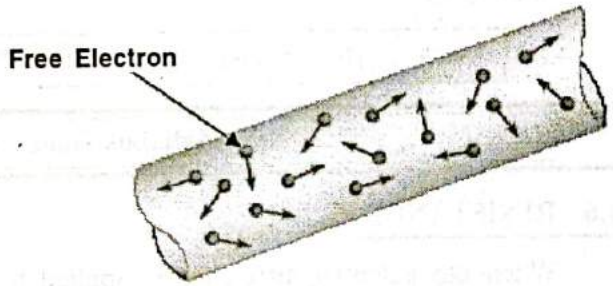


FIG. 1.3 : RANDOM MOTION OF FREE ELECTRONS IN A CONDUCTOR

- Fig. 1.4 shows that the flow of electrons in the wire is from B to A. i.e. From negative terminal of the cell to the positive terminal through external circuit.

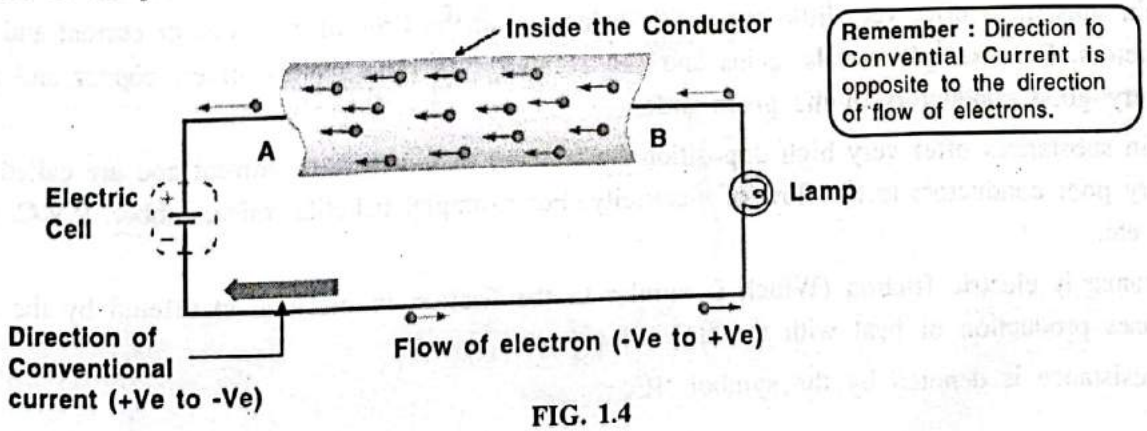


FIG. 1.4

Scanned with CamScanner

**Definition :**

- Electric current is defined as the rate of flow of electrons. Mathematically.

$$I = \frac{Q}{t} \quad .. (1.3)$$

Where $I$ = current, $Q$ = charge,

$t$ = time

If charge varies with time, then

$$i = \frac{dq}{dt}$$

Where, $dq$ = change in charge

$dt$ = change in time

- The unit of current is Ampere. It is denoted by A.

**Definition of 1 ampere :**

- One ampere is equal to one coulomb per second.
- One coulomb of charge is the charge carried by $6.25 \times 10^{18}$ electrons.
- Hence, When a current of 1 ampere flows through a conductor $6.25 \times 10^{18}$ electrons are flowing through its cross section in 1 second.

**Unit :**

- The smaller units of current are milli-ampere (mA) and micro ampere (μA).

$$1 \text{ mA} = 10^{-3} \text{ A and } 1 \ \mu\text{A} = 10^{-6} \text{ A}$$

**ANDRE MARIE AMPERE (1775–1836)**

**Andre Ampere (1775-1836)**

Ander Marie Ampere was a French physicist and Mathematician. He carried out numerous experiments to study the magnetic effects of electric currents. Ampère was the first to discover techniques for detecting and measuring currents. Ampere began developing a mathematical and physical theory to understand the relationship between electricity and magnetism. Ampere showed that two parallel wires carrying electric currents attract or repel each other, depending on whether the currents flow in the same or opposite directions, respectively - this laid the foundation of electrodynamics. He also applied mathematics in generalizing physical laws from these experimental results. The most important of these was the principle that came to be called Ampere's law.

**Syllabus Topic :** Electrical Circuit Element (R)

## 1.6 RESISTANCE :

- When the potential difference is applied to a condutor, the current starts to flow or the free electrons start moving. While moving, the free electrons collide with the atoms and molecules of the conductor. Because of collision or obstruction the rate of flow of electrons or current is restricted. Hence we can say that there is some opposition to the flow of electrons or current.
- **The opposition offered by a substance to the flow of electric current is called resistance.**
- Certain substances offer very little opposition resistance to the flow of electrons or current and are called conductors. For example metals, acids and salt solutions, in pure metals silver, copper and aluminium are very good conductors in the given order.
- Certain substances offer very high opposition (resistance) to the flow of current and are called insulators or very poor conductors to the flow of electricity. For example, bakelite, mica, rubber, P.V.C. dry wood, glass etc.
- Resistance is electric friction (Which is similar to the friction in mechanics) offered by the substance. It causes production of heat with the flow of current.
- The resistance is denoted by the symbol 'R'.

Scanned with CamScanner

**Unit :**

- The practical unit of resistance is ohm and is represented by the symbol Ω (omega).

  The other units are :

  milli-ohm (mΩ), kilo-ohm ($k\Omega$); mega-ohm ($M\Omega$), etc.

  1 μ ohm = $10^{-6}$ ohm

  1 m ohm = $10^{-3}$ ohm

  1 k ohm = $10^{3}$ ohm

  1 M ohm = $10^{6}$ ohm

**Definition of 1 ohm :**

- If a potential of 1 volt is applied across two leads of a conductor and if a current of 1 ampere flows through it, the resistance of that conductor is said to be one ohm.

$$R = \frac{V}{I}$$

$$1 \text{ ohm} = \frac{1 \text{ volt}}{1 \text{ ampere}}$$

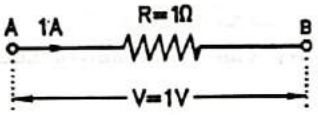


FIG. 1.5

**Syllabus Topic :** Electrical Circuit Element (L)

## 1.7 INDUCTOR :

- Inductor is an element that strore electrical energy in the form of magnetic field. An inductor is also called a coil.
- Inductance (L) is a property of inductor to oppose any change in magnitude or direction of current flowing through it. Its unit is henry (H).
- The inductance of a coil is given by $L = \frac{N\phi}{I}$

  where $N$ = Number of turns

  $\phi$ = Flux

  $I$ = Current through the coil

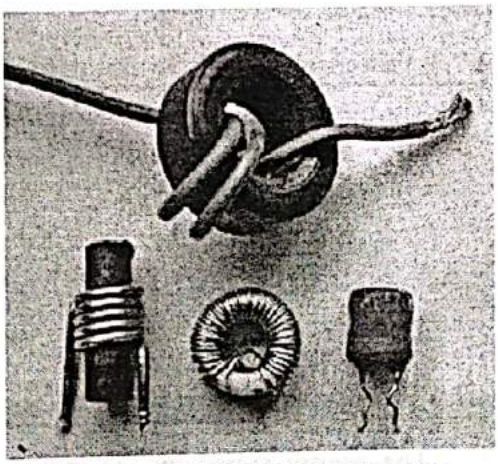

FIG. 1.6 : TYPES OF INDUCTOR

- The construction of inductor is shown in Fig. 1.7

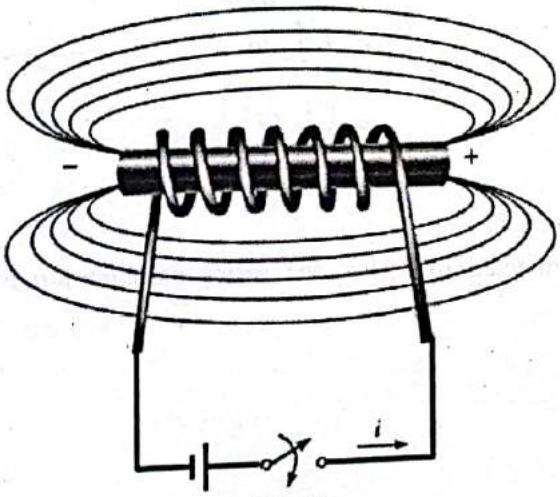


FIG. 1.7

Scanned with CamScanner

### 1.7.1 Types of Inductor :

- There are two types of inductors

| |
|---|
| 1. Fix type inductor |
| 2. Variable type inductor |

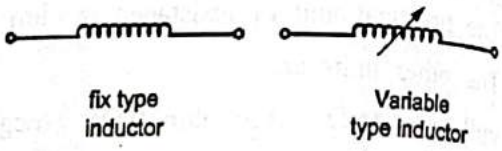


FIG. 1.8

### 1.7.2 Voltage and Current Equation :

- The current-voltage relation is given by $\boxed{v = L\dfrac{di}{dt}}$

where $V$ = Voltage across inductor
$i$ = Current through inductor

- We can write above equation as, $di = \dfrac{1}{L} v\, dt$

Integrating both sides, we get $\int di = \dfrac{1}{L}\int v\, dt$

$$\boxed{i = \frac{1}{L}\int v\, dt}$$

### 1.7.3 Power absorbed by inductor :

- The power absorbed by inductor is $P = v \cdot i$

$$= \left(L\frac{di}{dt}\right)\cdot i$$

$$= \boxed{Li\frac{di}{dt}\ \text{Watt}}$$

### 1.7.4 Energy stored by the inductor :

- The energy stored by the inductor is $E = \int P\, dt$

$$= \int Li\frac{di}{dt}\, dt$$

$$= L\int i\, di$$

$$= \boxed{\frac{1}{2}LI^2}$$

### 1.7.5 Inductors in Series :

- If the two inductors are connected in series, the series combination is given by

$$\boxed{L_{eq} = L_1 + L_2}$$

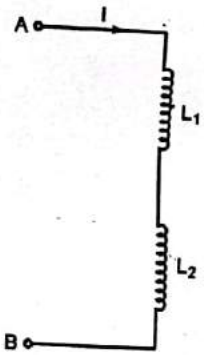


FIG. 1.9 : INDUCTORS IN SERIES

Scanned with CamScanner

### 1.7.6 Inductors in Parallel :

- If the two inductors are connected in parallel, the parallel combination is given by

- $$\frac{1}{L_{eq}} = \frac{1}{L_1} + \frac{1}{L_2}$$

$$\therefore \quad \boxed{L_{eq} = \frac{L_1 \cdot L_2}{L_1 + L_2}}$$

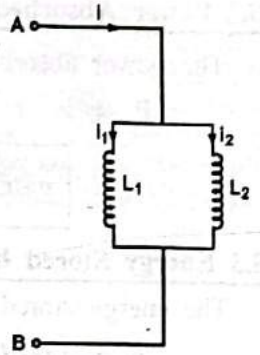


FIG. 1.10 : INDUCTORS IN PARALLEL

**Syllabus Topic : Electrical Circuit Element (C)**

## 1.8 CAPACITOR :

- Capacitor is an element that store electrical energy in the form of static charge.
- Capacitance (C) is a property of capacitor to store electrical energy in the form of charge.

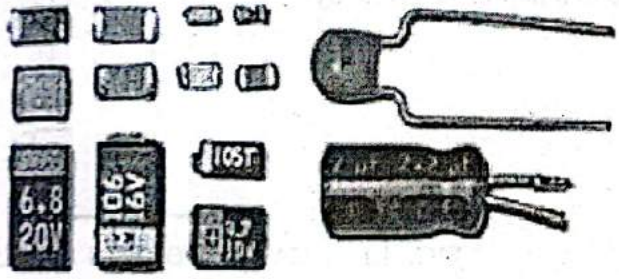

FIG. 1.11 : TYPES OF CAPACITOR

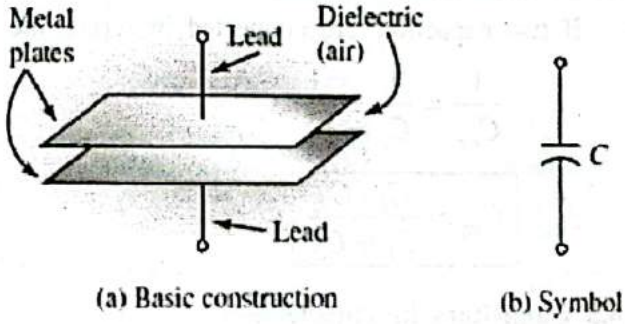


FIG. 1.12 : BASIC CONSTRUCTION AND SYMBOL OF CAPACITOR

### 1.8.1 Voltage and Current Equation :

- The unit of capacitance is farad (F).

$$\therefore \quad \boxed{C = \frac{Q}{V} \quad \text{or} \quad C = \frac{q}{v}} \qquad \text{... (1)}$$

- We can write above equation in terms of current

$$\boxed{i = \frac{dq}{dt} = \frac{d}{dt}(Cv) = C\frac{dv}{dt}} \qquad \text{... (2)}$$

where $V$ = Voltage across capacitor

$i$ = Current through a capacitor

$$\therefore \quad dv = \frac{1}{C} i\, dt$$

Taking integrating both side, we get

$$\int [dv] = \frac{1}{C} \int i\, dt$$

$$\therefore \quad \boxed{V = \frac{1}{C} \int i\, dt} \qquad \text{... (3)}$$

Scanned with CamScanner

### 1.8.2 Power Absorbed by Capacitor :

- The power absorbed by the capacitor is given by

$$P = v \cdot i$$

$$= \boxed{v \cdot C \frac{dv}{dt}} \quad \text{... (4)} \quad \text{[From equation (2)]}$$

### 1.8.3 Energy Stored by Capacitor :

- The energy stored by the capacitor is

$$E = \int p \, dt$$

$$= \int v \cdot C \frac{dv}{dt} dt \quad \text{[From equation (4)]}$$

$$= C \int v \, dv$$

$$= \boxed{\frac{1}{2} CV^2} \quad \text{... (5)}$$

### 1.8.4 Capacitors in Series :

- If two capacitors are connected in series, the series combination is given by

$$\frac{1}{C_{eq}} = \frac{1}{C_1} + \frac{1}{C_2}$$

$$\therefore \quad \boxed{C_{eq} = \frac{C_1 \cdot C_2}{C_1 + C_2}}$$

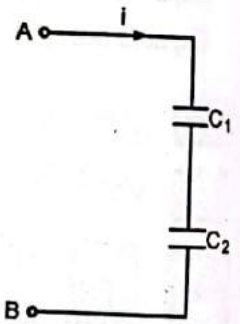


FIG. 1.13 : CAPACITORS IN SERIES

### 1.8.5 Capacitors in Parallel :

- If two capacitors are connected in parallel, the parallel combination is given by

$$\boxed{C_{eq} = C_1 + C_2}$$

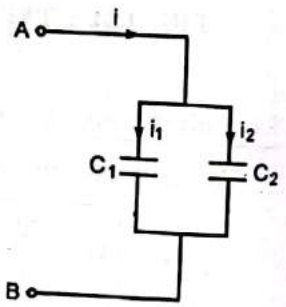


FIG. 1.14 : CAPACITORS IN PARALLEL

### 1.8.6 Types of Capacitor :

- The capacitors are generally classified according to the dielectric medium applied between two plates.
- The following are some of the important types of capacitors commonly used.

1. Air Capacitor
2. Paper Capacitor
3. Ceramic Capacitor
4. Plastic Capacitor
5. Electrolytic Capacitor
6. Mica Capacitor
7. Glass Capacitor

Scanned with CamScanner

**Example-1.1 :**

**Two capacitors $C_1 = 4\ \mu F$ and $C_2 = 2\ \mu F$ are connected in parallel across a 200 V DC supply find (1) Equivalent capacitance (2) Charge across each capacitor (3) If this parallel capacitor combination connected in series with 6 μF then what would be the equivalent capacitance of circuit becomes ?**

**GTU, December-2010**

*Solution :*

(1) Equivalent capacitance $C_{eq} = C_1 + C_2$ ... (Parallel Connection)

$$= 4 + 2$$

$$= \boxed{6\ \mu F}$$

(2) Due to parallel connection, the voltage across each capacitor is same

$\because \quad v_1 = v_2 = 200$ V DC

As $Q = CV$

$Q_1 = C_1 \times V_1$

$= 4 \times 200$

$= \boxed{800\ \mu C}$

$Q_2 = C_2 \times V_2$

$= 2 \times 200$

$= \boxed{400\ \mu C}$

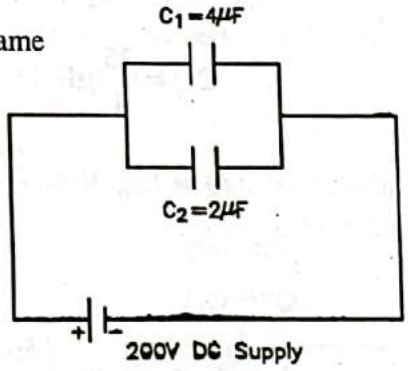


FIG. 1.15

(3) 6 μF and 6 μF are in series

$$\therefore \quad \frac{1}{C_{eq}} = \frac{1}{6} + \frac{1}{6}$$

$$\therefore \quad C_{eq} = \frac{6 \times 6}{6 + 6}$$

$$= \frac{36}{12}$$

$$= \boxed{3\ \mu F}$$

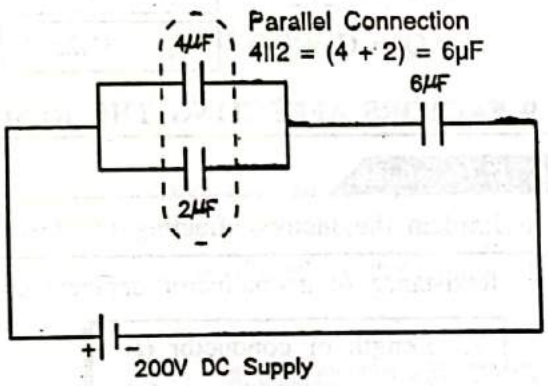


FIG. 1.16

**Example-1.2 :**

**Three capacitors have capacitance of 10, 50 and 25 μF.**

**Calculate : (i) Charge on each capacitor when they are connected in parallel to a 250 V supply (ii) Total capacitance and (iii) Potential difference across each capacitor when they are connected in series.**

**GTU, January-2011**

*Solution :*

**Part-1 : Parallel connection**

**(i) Charge on each Capacitor :**

Due to the parallel connection, Voltage across each capacitor is same, equal to 250 V

$\therefore \quad Q_1 = C_1 V = 10 \times 250 = \boxed{2500\ \mu C}$

$\therefore \quad Q_2 = C_2 V = 50 \times 250 = \boxed{12500\ \mu C}$

$\therefore \quad Q_3 = C_3 V = 25 \times 250 = \boxed{6750\ \mu C}$

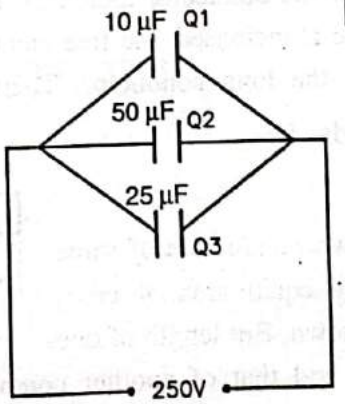


FIG. 1.17



Scanned with CamScanner

(ii) Total Capacitance,

$$C_{eq} = C_1 + C_2 + C_3 \quad \text{... (Parallel Connection)}$$
$$= 10 + 50 + 25$$
$$= \boxed{85\ \mu F}$$

**Part-2 : Series Connection**

In series connection, charge on each capacitor is same.

$$\frac{1}{C_{eq}} = \frac{1}{C_1} + \frac{1}{C_2} + \frac{1}{C_3} = \frac{1}{10} + \frac{1}{50} + \frac{1}{25}$$

$$\therefore \quad C_{eq} = \frac{25}{4}\ \mu F$$

$$Q = C_{eq}\ V = \frac{25}{4} \times 250 = \boxed{1562.5\ \mu C}$$

Similarly

$$Q = C_1 V_1$$

$$\therefore \quad V_1 = \frac{Q}{C_1} = \frac{1562.5}{10} = \boxed{156.25\ V}$$

$$Q = C_2 V_2 \rightarrow \boxed{V_2 = 62.5\ V}$$

$$Q = C_3 V_3 \rightarrow \boxed{V_3 = 31.25\ V}$$

## 1.9 FACTORS AFFECTING THE RESISTANCE VALUE : GTU, May-2011

**GTU Questions**

1. Explain the factors affecting the resistance of a conducting material. [May-2011, 3-Marks]

- Resistance of a conductor depends upon the following factors.

1. Length of conductor ($l$)
2. Cross sectional area ($a$)
3. Type of material
4. Temperature

### 1. Length of conductor :

- If the length of the conductor increases, the distance that the free electrons will travel also increases. As the distance is increased, the free electrons will be obstructed by more atoms and molecules which are present in the long conductor. Therefore the resistance of the conductor is increased.
- In others words, i.e.

$$\boxed{R \ \alpha \ l}$$

- In Fig. 1.18, two conductors of same material having equal area of cross sectional are shown. But length of one conductor is $l$ and that of another conductor is $2l$. Resistance of conductor having length $2l$ will be twice than that having length $l$.

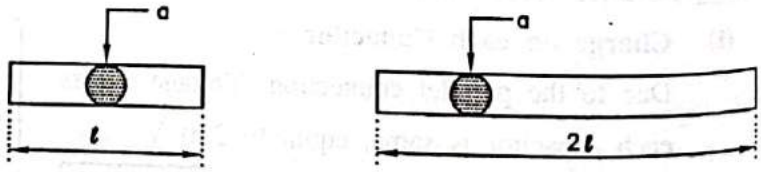


FIG. 1.18

Scanned with CamScanner

**2. Cross sectional area :**

- For given free electrons if the area of cross section of the conductor is increased, the path for the flow of free electrons is increased. Hence opposition offered is decreased. So resistance offered by the conductor is also decreased.
- In other words,

$$\boxed{\text{i.e. } R \propto \frac{1}{a}}$$

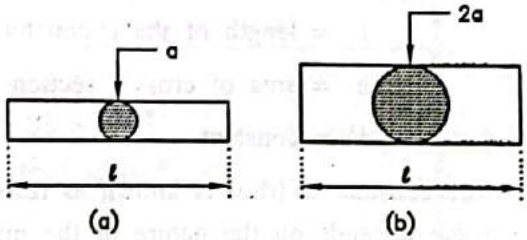


FIG. 1.19

- In Fig 1.19 (a) and (b), the length of wire is the same but in (b) the area of cross section is double than that in (a). So the resistance of conductor in (b) will be half of that in (a).

**3. Type of material :**

- Different substances have different atomic structures because each material has different atomic weight and atomic number. So the resistance offered by each material will be different because of different number of free electrons available.
- In Fig. 1.20 two conductors having equal length $l$ and equal cross sectional area a are shown. One is copper wire and the other is aluminium wire. The resistance of aluminium wire is more. In this case the resistance of aluminium conductor i.e. 1.6 of times that of copper conductor.

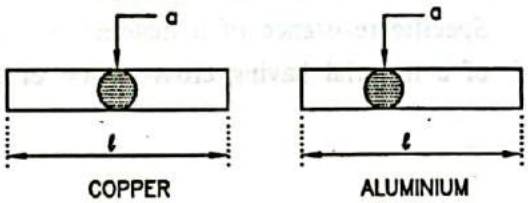


FIG. 1.20

**4. Temperature :**

- When the temperature of a substance increases, the molecules vibrate more rapidly, impending the movement of free electrons through the substance. On increasing the temperature, there is no further increase in free electrons in a conductor. On account of this, the resistance offered by the conductor increases.

## 1.10 RESISTIVITY OR SPECIFIC RESISTANCE ($\rho$) : GTU, December-2010

**GTU Questions**

1. Define : Resistivity [December-2010, 1-Mark]

- We learnt that the resistance of a conductor is directly proportional to its length.

$$R \propto l \quad \text{... (i)}$$

- and resistance is inversely proportional to the area of cross section.

$$R \propto \frac{1}{a} \quad \text{... (ii)}$$

Combining (i) and (ii)

$$R \propto \frac{l}{a}$$

$$\therefore \boxed{R = \rho \frac{l}{a}} \quad \text{... (iii)}$$

Scanned with CamScanner

Where, $R$ = resistance of the conductor ($\Omega$)

$l$ = length of the conductor (m)

$a$ = area of cross - section of the conductor ($m^2$)

$\rho$ = constant

- The constant $\rho$ (rho) is known as resistivity or specific resistance of the material of the conductor. Its value depends on the nature of the material.
- From equation (iii)

$$R = \frac{\rho l}{a}$$

If $l = 1$ m, $a = 1$ $m^2$

$$\boxed{R = \frac{\rho \times 1}{1} = \rho}$$

**Definition of Specific Resistance :** **GTU, December-2010**

- Specific resistance of a material of a conductor is the resistance offered by one meter length of wire of a material having cross-section of 1 $m^2$, (Refer Fig. 1.21)

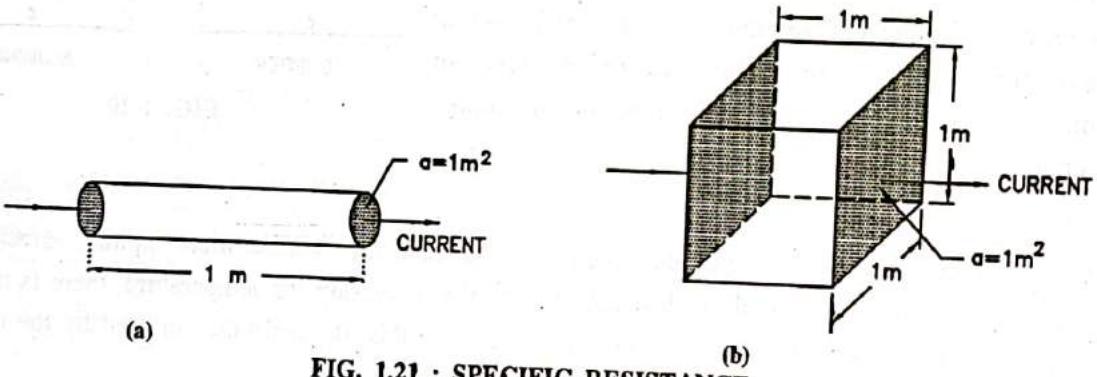


**FIG. 1.21 : SPECIFIC RESISTANCE**

- In other words, it is defined as the resistance between the opposite faces of a cube of the material having each side of 1 meter as shown in fig. 1.21 (b).

**Unit of Resistivity :**

- Rearranging the expression for resistance R, we get

$$\rho = \frac{R \times a}{l}$$

- From the above, it can be seen that the unit of resistivity depends on the unit of cross sectional area "$a$" and length "$l$". If $l$ is in metre, $a$ in $m^2$.

$$\boxed{\rho = \frac{\text{ohm} \times m^2}{m} = \text{ohm} - m \quad \text{or} \quad \Omega - m}$$

- Values of resistivities of some materials which are widely used as electrical conductors is given in the table 1.1.

Scanned with CamScanner

**Table 1.1 Resistivities of different materials.**

| Material | Resistivity (ϱ) in ohm-m at 20°C |
|---|---|
| Copper | $1.72 \times 10^{-8}$ |
| Aluminium | $2.82 \times 10^{-8}$ |
| Nichrome [Cu 80%] [Cr 20%] | $108.5 \times 10^{-8}$ |
| Silver | $1.64 \times 10^{-8}$ |
| Gold | $2.4 \times 10^{-8}$ |
| Carbon | $7000 \times 10^{-8}$ |
| Iron | $9.8 \times 10^{-8}$ |
| Eureks | $49 \times 10^{-8}$ |

**Example-1.3 :**

**Calculate the resistance of 100 m length of a wire having a uniform cross sectional area of 0.1 mm$^2$ if the wire is made of Manganin having a resistivity of $50 \times 10^{-8}$ ohm-m.**

***Solution :***

$l = 100$ m

$a = 0.1 \text{ mm}^2 = 0.1 \times 10^{-6} \text{ m}^2$

$\varrho = 50 \times 10^{-8}\ \Omega\text{m}$

$$R = \frac{\varrho l}{a} = \frac{50 \times 10^{-8} \times 100}{0.1 \times 10^{-8}} = \boxed{500\ \Omega}$$

**Example-1.4 :**

**A wire has a resistance of 2 Ω. It has been stretched to the length 3 times that of original, what will be the resistance of wire ?** **GTU, May-2013**

***Solution :***

We know that

$$R = \frac{\varrho l}{a}$$

$$= \frac{\varrho \times l}{a} \times \frac{l}{l} \quad [\because \text{ Multiply and divide by } 'l']$$

$$= \frac{\varrho l^2}{a l}$$

$$= \frac{\varrho l^2}{V} \quad [\because \text{ Volume} = a.l]$$

By stretching the wire, volume remains unchanged

$\therefore \quad R \propto l^2 \quad [\therefore \quad \varrho V = \text{constant}]$

In other words

$$\frac{R_2}{R_1} = \left(\frac{l_2}{l_1}\right)^2$$

Scanned with CamScanner

Now $R_1 = 2\ \Omega \qquad l_2 = 3\ l_1$

$$\therefore \quad R_2 = 2\left(\frac{3\,l_1}{l_1}\right)^2$$

$$= 2\ (3)^2$$

$$= \boxed{18\ \Omega}$$

**Example 1.5 :**

**Two wires of conducting material (different conducting materials) are connected in parallel, They share current in ratio 5:6. If the wire of material 1 has 1.7 times length & double cross-section area than that of material 2, find the ratio of their specific resistances.** **GTU, May 2012**

***Solution :***

Given data :

$$\frac{I_1}{I_2} = \frac{5}{6} = 1.7$$

$$l_1 = 1.7\ l_2,$$

$$a_1 = 2\ a_2$$

Here, Two wires are connected in parallel. So that current is inversely proportional to the resistance.

$$\frac{I_1}{I_2} = \frac{5}{6} = \frac{R_2}{R_1} \qquad \left[\because\ I \propto \frac{1}{R}\right]$$

$$\text{Now} \quad \frac{R_2}{R_1} = \frac{\varrho_2\, l_2}{a_2} \times \frac{a_1}{\varrho_1\, l_1} = \frac{5}{6} \qquad \left[\because\ R = \varrho\,\frac{l}{a}\right]$$

$$\therefore \quad \frac{\varrho_2}{\varrho_1} \cdot \frac{l_2}{l_1} \cdot \frac{a_1}{a_2} = \frac{5}{6}$$

$$\therefore \quad \frac{\varrho_1}{\varrho_2} = \frac{l_2}{l_1} \times \frac{a_1}{a_2} \times \frac{6}{5}$$

$$\therefore \quad \frac{\varrho_1}{\varrho_2} = \frac{1}{1.7} \times 2 \times \frac{6}{5} = \boxed{1.41}$$

## 1.11 OHM'S LAW : GTU, December-2015, 2016, 2017; May-2017, January-2020

**GTU Questions**

1. Write Ohm's law. **[May-2017, 1-Mark]**
2. State Ohm's law and Kirchhoff's laws in context with DC circuits. **[December-2015, 2016, 2017, January-2020, 3-Marks]**

- The relationship between the potential difference ($V$), the current ($I$) and the resistance ($R$) in a dc. circuit, first discovered by the scientist George Simon Ohm is called Ohm's law.

**Statement :**

- The ratio of potential difference between any two points of a conductor to the current flowing between them is constant, provided the physical conditions (e.g. temperature etc.) do not change.

Scanned with CamScanner

In other words,

$$\frac{V}{I} = \text{constant}$$

$$\text{or} \quad \frac{V}{I} = R$$

where $R$ is the resistance between the two points considered.

- The unit of resistance i.e. ohm was named in the honour of George Simon Ohm.
- Putting the statement in another way, it simply means that the current is directly proportional to the potential difference across the ends of the conductor provided $R$ is kept constant.
- If $V$ is measured in volts and $I$ in amperes, $R$ is given in ohms.

For calculation, the various forms should be remembered :

1. $I = \frac{V}{R}$ i.e Current = $\frac{\text{potential difference}}{\text{resistance}}$
2. $V = I R$ i.e potential difference = current × resistance
3. $R = \frac{V}{I}$ i.e resistance = $\frac{\text{potential difference}}{\text{current}}$

- This law is applicable to dc and ac both.

GEORG SIMON OHM (1787-1854)

**Geore Simon ohm (1787-1854)**

He was German physicist, professor at Munich. Ohm was led to his law by an analogy between the conduction of heat : the electric field is analogous to the temperature gradient, and the electric current is analogous to the heat flow.

**Limitations :**

1. Ohm's law does not apply to all non-metallic conductors. For example, for silicon carbide, relationship is given by $V = K \cdot I^m$ where K and m are constants and $m < 1$.
2. It does not apply to non-linear devices. For example, zener diode, VR tubes etc.
3. It is true for metal conductors at constant temperature only. If the temperature changes, the law is not applicable

## 1.12 POWER AND ENERGY IN SIMPLE ELECTRICAL CIRCUIT :

**1. Power :**

- Power is defined as the rate of doing work
- The unit of power is watt or Joule/sec
- It can be denoted by symbol 'P'
- $\text{Power} = \frac{\text{workdone}}{\text{time}}$
- Electrical power = $\frac{\text{workdone in electric circuit}}{\text{time}}$
- When voltage is applied to a circuit, it causes the current (electrons) to flow through it. Thus certain amount of work is done in moving the electrons in the circuit.

If $V$ = potential difference across the circuit (V),

$I$ = Current in the circuit (A),

$R$ = resistance of the circuit ($\Omega$)

$t$ = time for which the current flows (sec)

JAMES WATT, (1736–1819)

**James Watt, (1736–1819)**

He was Mechanical Engineer Working as an **instrument maker** at the University of Glasgow. His first major invention was a steam engine. He introduced a design enhancement, the separate conden-ser, which avoided this waste of energy and radically improved the power, efficiency, and cost-effectiveness of steam engines. He Introduce the term Horsepower as the average power of a strong dray (small cart) horse over a full working day.

Scanned with CamScanner

The total charge that flows in t sec is

$Q = I \times t$ coulomb

Work done $= VQ = VIt$

- Electrical power $= \dfrac{\text{Work done}}{\text{time}}$

$$= \frac{VIt}{t} \text{ joule/sec}$$

$$= V\,I \text{ watt}$$

$$= I^2 R \text{ watt} \qquad [\because V = IR]$$

$$= \frac{V^2}{R} \text{ watt} \qquad \left[\because I = \frac{V}{R}\right]$$

- The bigger units are

| |
|---|
| 1 kW = $10^3$ watt |
| 1 MW = $10^6$ watt |

## 2. Electrical Energy :

- The total work done in an electric circuit is called as electrical energy

i.e. Electrical Energy = potential difference × charge

$$= VQ \text{ joule}$$

$$= VIt \text{ joule}$$

$$= I^2 Rt \text{ joule}$$

$$= \frac{V^2 t}{R} \text{ joule}$$

- Alternatively electrical energy is the product of power and time for which the current flows in the circuit.

$$\boxed{E = P \times t}$$

- The unit of energy is joule (or watt sec).
- If power is in watt and time in hour, then unit of electrical energy is watt hour.
- If power is in kilowatt and time in hour, then the unit of electrical energy is kWh.

**JAMES PRESCOTT JOULE (1818-1889)**

**James Prescott Joule (1818-1889)**
He was English Physicist. He was contributed to the important law of conservation of energy, and this led to the development of the First law thermodynamics. The SI derived unit of energy, the joule, is named for James Joule. He worked with Lord Kelvin to develop the absolute scale of temperature. Joule also made observations of magnetostriction, and he found the relationship between the current through a resistor and the heat dissipated, which is now called Joule's first law.

- 1 kWh of electric energy is also called 1 unit. i.e. 1 unit = 1 kWh

Also, 1 kWh = 1 kW × 1 hr

$$= (10^3 \text{ watts}) \times (60 \times 60 \text{ sec})$$

$$= 36 \times 10^5 \text{ watt sec}$$

$$= 36 \times 10^5 \text{ joule}$$

$$\boxed{1 \text{ kWh} = 36 \times 10^5 \text{ joule}}$$

Scanned with CamScanner

**Example 1.6 :**

**A lamp rated 100 V, 75 W is to be connected across 230 V supply. Find the value of resistance to be connected in series with the lamp. Also find the power loss occurring in the resistance.**

***Solution :***

Voltage across $R = V_R = 230 - 100 = 130$ V

Current flow through the circuit is same as through lamp.

$$I = \frac{P}{V} = \frac{75}{100} = 0.75 \text{ Amp.}$$

$$\therefore \quad R = \frac{V_R}{I} = \frac{130}{0.75}$$

$$= \boxed{173.33\ \Omega}$$

Power Loss $= I^2 R$

$= (0.75)^2 \times 173.33$

$= \boxed{97.5 \text{ Watt}}$

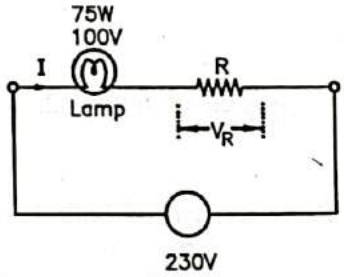


**FIG. 1.23**

**Example-1.7 :**

**A 100 V, 100 W lamp is connected in series with a A 100 V, 60 W lamp across 200 V supply. Determine current drawn and power consumed by each lamp.** **GTU, June-2013**

***Solution :***

Resistance of lamp 1, $R_1 = \frac{(V_1)^2}{P_1}$

$$= \frac{(100)^2}{100}$$

$$= 100\ \Omega$$

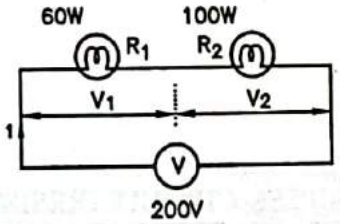


**FIG. 1.24**

Similarly Resistance of lamp 2, $R_2 = \frac{(V_2)^2}{P_2}$

$$= \frac{(100)^2}{60}$$

$$= 166.66\ \Omega$$

Total resistance $= 100 + 166.66 = 266.66\ \Omega$

Current $I = \frac{V}{R} = \frac{200}{266.66} = \boxed{0.75 \text{ A}}$

Power consumed by Lamp-1 $P_1 = I^2 \cdot R_1$

$= (0.75)^2 \times 100$

$= \boxed{56.25 \text{ Watt}}$

Power consumed by Lamp-2 $P_2 = I^2 \cdot R_2$

$= (0.75)^2 \times 166.66$

$= \boxed{93.7 \text{ Watt}}$



Scanned with CamScanner

**Example-1.8 :**

**A 100 V, 60 W bulb is connected in series with a 100 V, 100 W bulb and the combination is connected across the 200 V mains. Find the value of resistance that should be connected across the first bulb, so that each bulb may get proper current at the proper voltage.** **GTU, January-2011**

***Solution :***

Resistance of bulb - 1, $R_1 = \frac{V^2}{P} = \frac{100^2}{60}$

$= 166.66\ \Omega$

Resistance of bulb - 2, $R_2 = \frac{V^2}{P} = \frac{100^2}{100}$

$= 100\ \Omega$

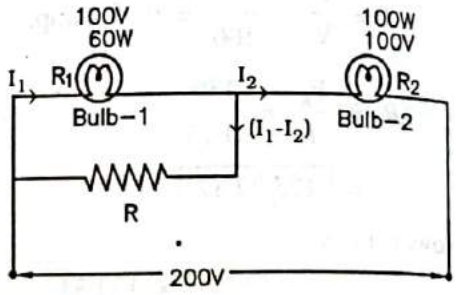


FIG. 1.25

Rated current of bulb 1,

$$I_1 = \frac{P_1}{V_1} = \frac{60}{100} = 0.6\ A$$

Similarly, rated current of bulb 2,

$$I_2 = \frac{P_2}{V_2} = \frac{100}{100} = 1\ A$$

- Let R ohm be the resistance of the resistor connected in parallel with bulb 1 as shown in Fig. 1.25 to limit the current $I_1$ to its rated value.

Current flowing through resistance $R = I_1 - I_2 = 1 - 0.6 = 0.4$ A

Resistance of resistor $R = \frac{V_1}{I}$

$= \frac{100}{0.4}$

$= \boxed{250\ \Omega}$

## 1.13 SERIES CIRCUIT (RESISTANCES CONNECTED IN SERIES) :

**GTU Questions**

**1.** Analyze series circuti having resistors only as elements and state the results. **[May-2015, 4-Marks]**

- Consider two resistances $R_1$ and $R_2$ connected in series across a voltage source of $V$ volts as shown in Fig. 1.26 (a).

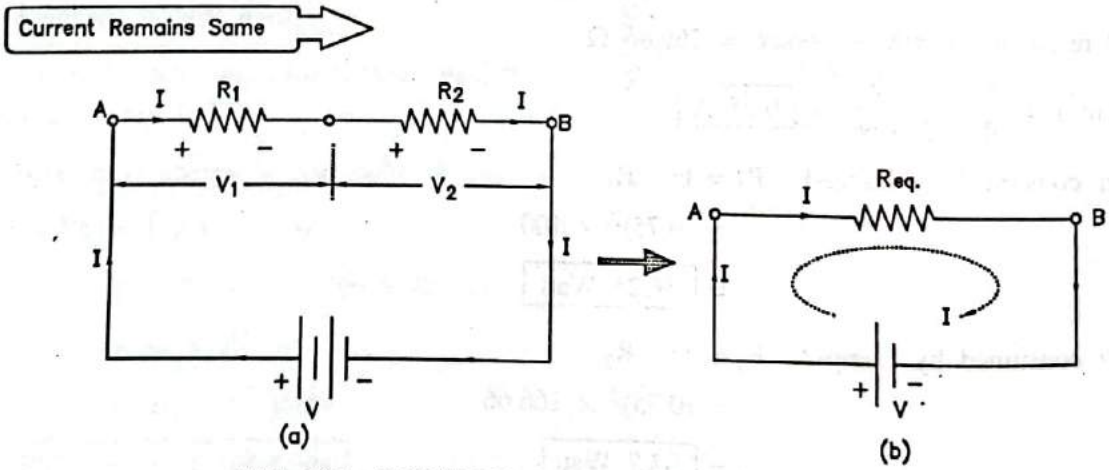


FIG. 1.26 : RESISTANCES CONNECTED IN SERIES

Scanned with CamScanner

- Let $V_1$ and $V_2$ be the potential differences across $R_1$ and $R_2$ respectively. Let $R_{eq}$ be the total or equivalent resistance of the series circuit. Since it is a series circuit, the currents flowing through $R_1$ and $R_2$ are same which is nothing but $I$.
- By Ohm's law,

$$V_1 = I\,R_1 \quad \text{... (i)}$$

$$V_2 = I\,R_2 \quad \text{... (ii)}$$

- It is clear that

$$V = V_1 + V_2 \quad \text{... (iii)}$$

- Substituting equations (i) and (ii) in equation (iii), we get

$$= I\,R_1 + I\,R_2$$

$$= I\,(R_1 + R_2)$$

$$\therefore \quad \frac{V}{I} = R_1 + R_2 \quad \text{... (iv)}$$

- The ratio $\frac{V}{I}$ is the total or effective or equivalent resistance ($R_{eq}$) between the points A and B.

$$\therefore \quad R_{eq} = R_1 + R_2$$

- Thus the equivalent resistance of a series combination is equal to the sum of individual resistances connected in series.
- Thus if we have four resistances in series, then

$$R_{eq} = R_1 + R_2 + R_3 + R_4$$

- In general if there are '$n$' number of resistances connected in series, then

$$\boxed{R_{eq} = R_1 + R_2 + R_3 + \ldots + R_n = \sum_{x=1}^{n} R_x}$$

## 1.14 PARALLEL CIRCUIT (RESISTANCES CONNECTED IN PARALLEL) : GTU, May-2015

**GTU Questions**

1. Analyze parallel circuit having resistors only as elements and state the results. **[May-2015, 4-Marks]**

- Consider three resistances $R_1$, $R_2$ and $R_3$ connected in parallel across a voltage source of $V$ volts as shown in Fig. 1.27(a).

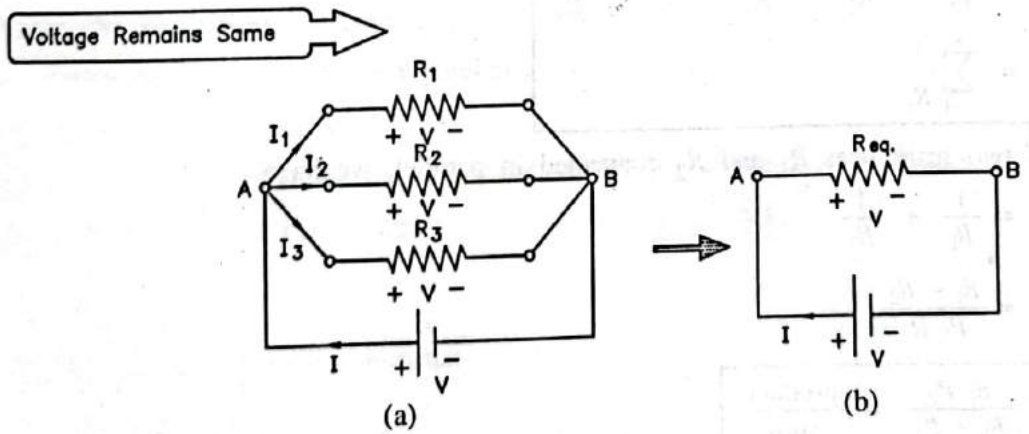


**FIG. 1.27 : RESISTANCES CONNECTED IN PARALLEL**

Scanned with CamScanner

- The total current $I$ divides into three parts : $I_1$ flowing through $R_1$, $I_2$ flowing through $R_2$ and $I_3$ flowing through $R_3$.
- Obviously voltage across each resistance is same and equal to the applied voltage $V$.
- Let $R_{eq}$ be the total or equivalent resistance of the parallel circuit connected between the points A and B. as shown in Fig. 1.27(b).

According to Ohm's law,

$$I_1 = \frac{V}{R_1} \quad \text{... (i)}$$

$$I_2 = \frac{V}{R_2} \quad \text{... (ii)}$$

$$I_3 = \frac{V}{R_3} \quad \text{... (iii)}$$

It is obvious that

$$I = I_1 + I_2 + I_3 \quad \text{... (iv)}$$

Substituting the equations (i), (ii) and (iii) in equation (iv), we get

$$I = \frac{V}{R_1} + \frac{V}{R_2} + \frac{V}{R_3} \quad \text{... (v)}$$

$$= V\left[\frac{1}{R_1} + \frac{1}{R_2} + \frac{1}{R_3}\right]$$

$$\frac{I}{V} = \frac{1}{R_1} + \frac{1}{R_2} + \frac{1}{R_3} \quad \text{... (vi)}$$

But $\frac{V}{I}$ is the total or equivalent resistance between the points A and B.

$$\therefore \frac{V}{I} = R_{eq} \quad \text{or} \quad \frac{I}{V} = \frac{1}{R_{eq.}} \quad \text{... (vi}$$

Substituting equation (vii) in equation (vi), we get

$$\frac{1}{R_{eq}} = \frac{1}{R_1} + \frac{1}{R_2} + \frac{1}{R_3} \quad \text{... (viii}$$

- This holds good for any number of resistances connected in parallel. Thus if there are '$n$' no. of resistance in parallel, then

$$\boxed{\frac{1}{R_{eq}} = \frac{1}{R_1} + \frac{1}{R_2} + \frac{1}{R_3} + \ldots + \frac{1}{R_n} = \sum_{x=1}^{n} \frac{1}{R_x}}$$

In case of two resistances $R_1$ and $R_2$ connected in parallel, we have

$$\frac{1}{R_{eq}} = \frac{1}{R_1} + \frac{1}{R_2} \quad \text{... (ix)}$$

$$= \frac{R_1 + R_2}{R_1 R_2}$$

$$\therefore \boxed{R_{eq} = \frac{R_1 R_2}{R_1 + R_2} = \frac{\text{product}}{\text{sum}}} \quad \text{... (x)}$$

Scanned with CamScanner

## 1.15 COMPARISON OF SERIES AND PARALLEL CIRCUITS :

**GTU, May-2019**

**GTU Questions**

1. Compare the resistive series and parallel circuit. **[May-2019, 4-Marks]**

| Series Circuit | Parallel Circuit |
|---|---|
| 1. The connection is as shown. 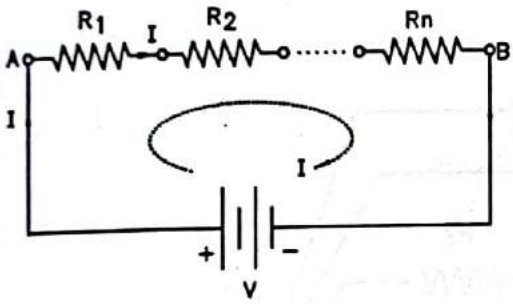  FIG. 1.28(a) | 1. The connection is as shown. 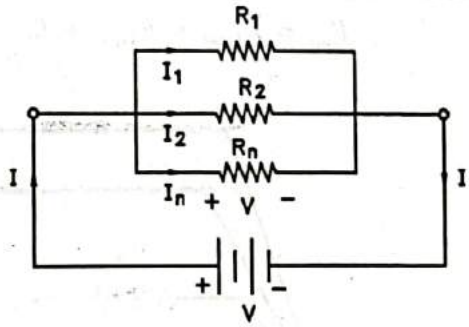  FIG. 1.28(b) |
| 2. The current passing through all the elements connected in series is the same. | 2. Voltage across each element connected in parallel is the same. |
| 3. There is only one path for flow of current. | 3. The paths for flow of current are more than one. |
| 4. The total voltage applied across series circuit is equal to the sum of the voltage drops across all the elements connected in series. i.e. $V = V_1 + V_2 + \ldots + V_n$ | 4. The total current flowing through the parallel combination is equal to the sum of all currents flowing through all the elements connected in parallel. i.e. $I = I_1 + I_2 + \ldots + I_n$ |
| 5. The equivalent resistance is $R_{eq} = R_1 + R_2 + \ldots + R_n$ | 5. The equivalent resistance is $\frac{1}{R_{eq}} = \frac{1}{R} + \frac{1}{R_2} + \ldots + \frac{1}{R_n}$ |
| 6. The equivalent resistance is greater than the greatest resistance connected in series circuit. $R_{eq} > R_1$, $R_{eq} > R_2 \ldots R_{eq} > R_n$ | 6. The equivalent resistance is less than that of the least resistance connected in the parallel circuit. |

## 1.16 SERIES - PARALLEL CONNECTIONS OF RESISTORS :

- Many a times, the resistances are connected in series parallel combination.
- In this case, first the equivalent resistance of parallel groups are found Then the circuit is solved as series circuit.
- This will be clear from the example.
- For solving it, let us first calculate the combined resistances of parallel conductors.

**Step-1 :** $R_3$ and $R_4$ (Parallel connection)

$$\therefore \quad \frac{1}{R_{34}} = \frac{1}{R_3} + \frac{1}{R_4}$$

**Step-2 :** $R_5$, $R_6$ and $R_7$ (Parallel connection)

$$\therefore \quad \frac{1}{R_{567}} = \frac{1}{R_5} + \frac{1}{R_6} + \frac{1}{R_7}$$

Scanned with CamScanner

**Step-3 :** $R_{34}$ & $R_{567}$ (Series connection)

$$\therefore \quad R_{3to7} = R_{34} + R_{567}$$

**Step-4 :** $R_1$, $R_2$, $R_{3to7}$ and $R_8$ (Parallel connection)

$$\frac{1}{R_{1\,to\,8}} = \frac{1}{R_1} + \frac{1}{R_2} + \frac{1}{R_{3\,to\,7}} + \frac{1}{R_8}$$

**Step-5 :** $R_{1to8}$ and $R_9$ (Series connection)

$$\therefore \quad R_{eq} = R_{1to9} = R_{1to8} + R_9$$

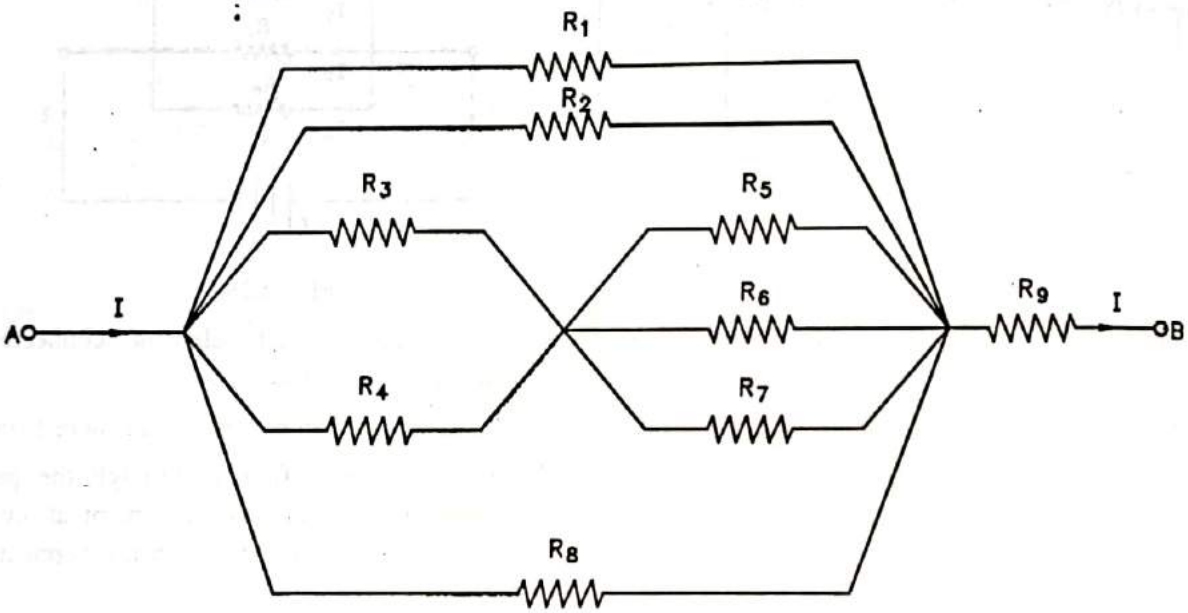


**FIG. 1.29 : COMBINATION OF RESISTANCES IN SERIES AND PARALLEL**

- $R_{1to9}$ gives the value of combined resistance of above series - parallel circuit.

- Draw the circuit diagram

⇩

Combine all parallel resistors by using the formula

$$\frac{1}{R_{Parallel}} = \frac{1}{R_1} + \frac{1}{R_2} + \ldots\ldots + \frac{1}{R_n}$$

⇩

Combine all series resistors by using the formula

$$R_{series} = R_1 + R_2 + R_3 + \ldots\ldots\ldots + R_n$$

⇩

Combine the equivalent resistance $R_{Series}$ and $R_{Parallel}$ and remaning resistors.

⇩

Find total equivalent resistance of the circuit.

Scanned with CamScanner

**Example-1.9 :**

For the circuit shown in Fig. 1.30 calculate the current taken by the circuit. **GTU, May-2009**

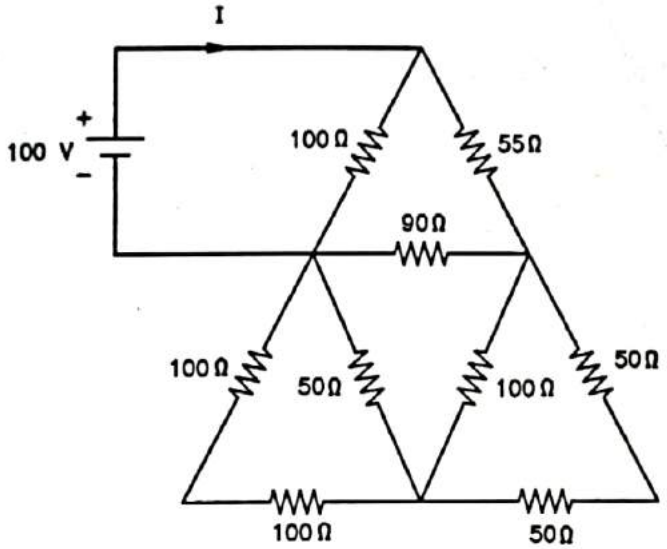


FIG. 1.30

*Solution :*

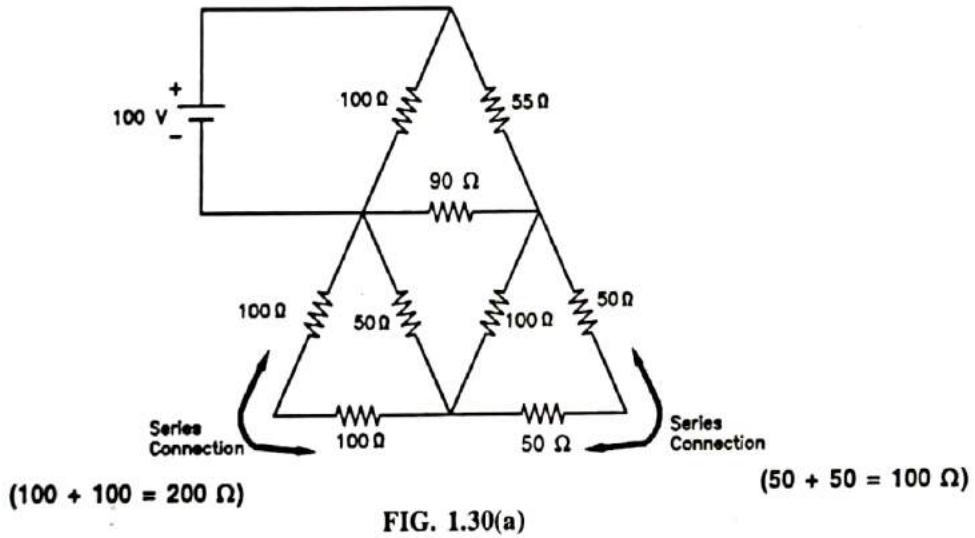


FIG. 1.30(a)

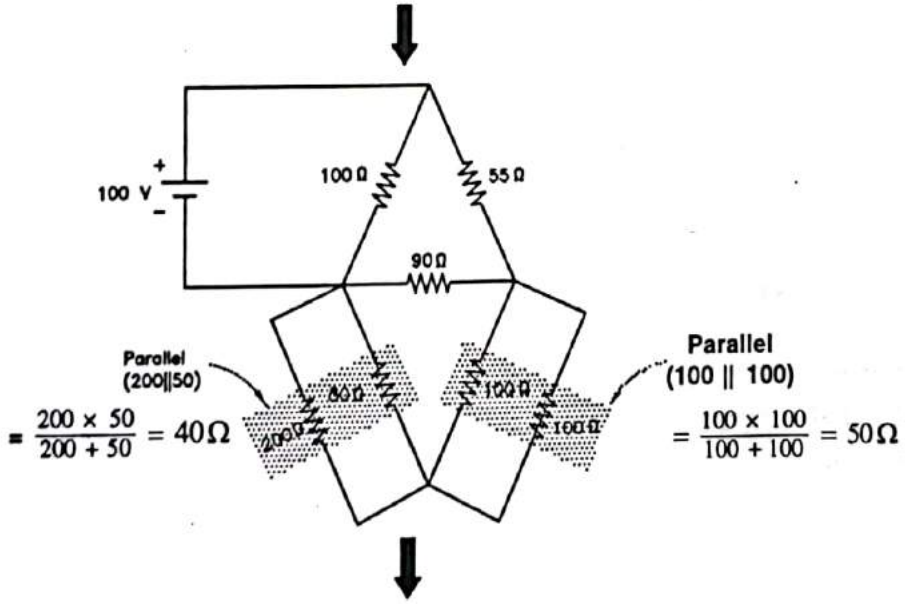


FIG. 1.30(b)

Scanned with CamScanner

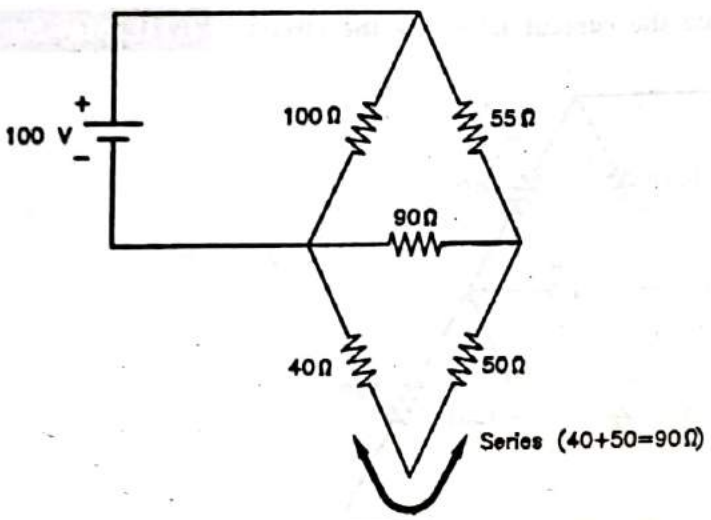


FIG. 1.30(c)

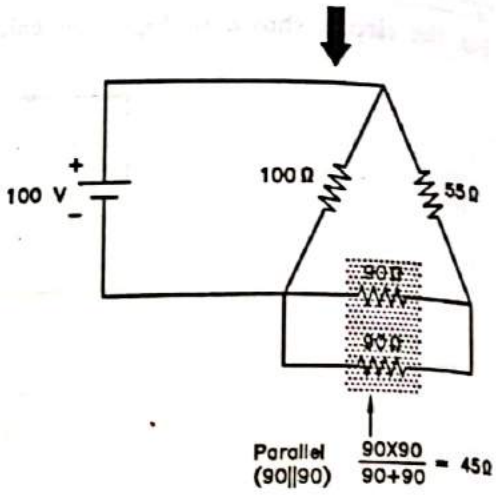


FIG. 1.30(d)

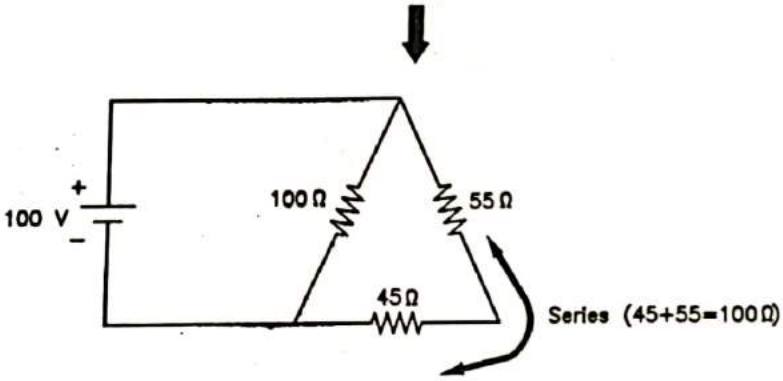


FIG. 1.30(e)

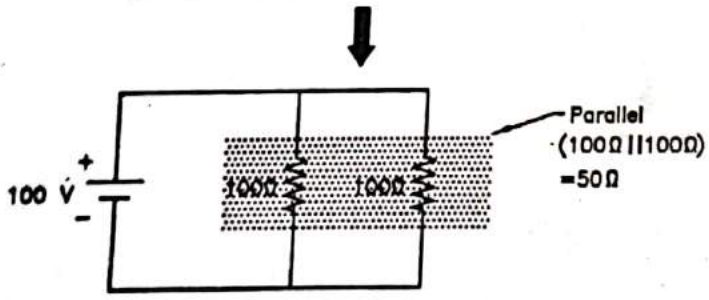


FIG. 1.30(f)

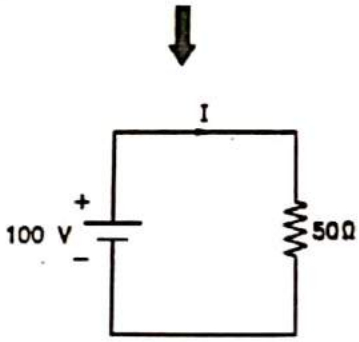


FIG. 1.30(g)

Current taken by circuit is

$$I = \frac{V}{R} = \frac{100}{50} = \boxed{2\text{ A}}$$

Scanned with CamScanner

**Example-1.10 :**

**Find the equivalent resistance between terminals A and B.**

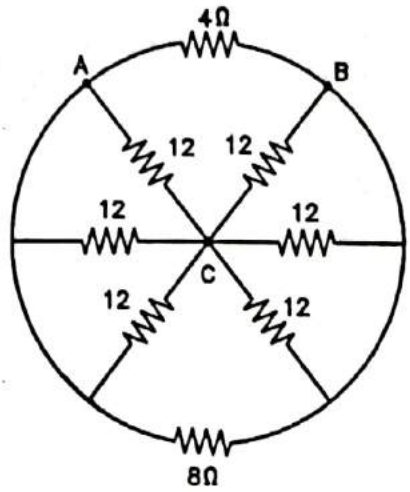


**FIG. 1.31**

***Solution :***

The circuit can be Redrawn in simplified manner as shown in Fig.

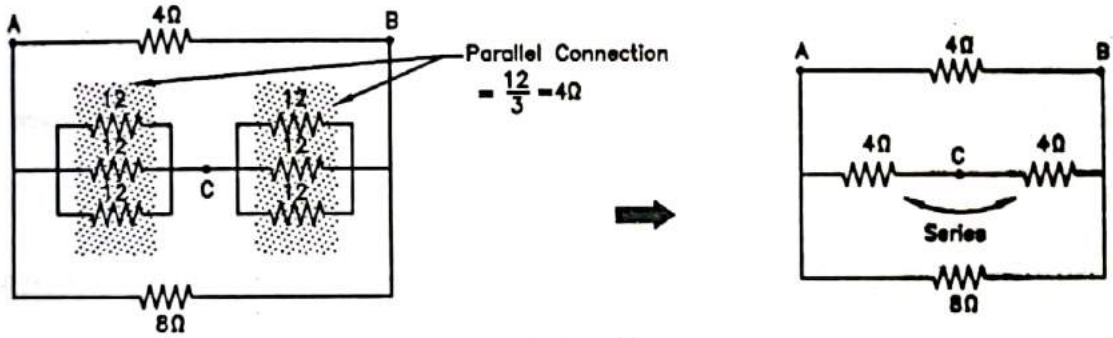


**FIG. 1.32**

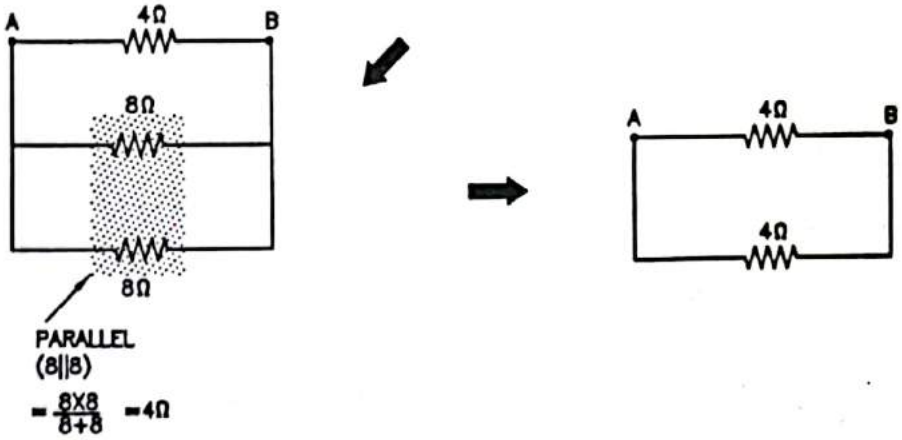


**FIG. 1.33**

$$R_{AB} = 4 \parallel 4$$

$$= \frac{4 \times 4}{4 + 4}$$

$$= \boxed{2\ \Omega}$$



Scanned with CamScanner

**Example-1.11 :**

**Determine the value of $R$ so that the current supplied by the battery is 5A.**

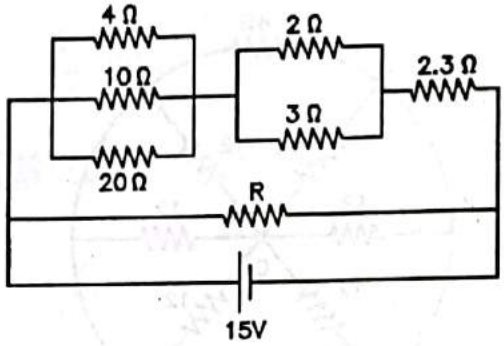


**FIG. 1.34**

***Solution :***

The resistances 4 Ω, 10 Ω and 20 Ω are in parallel.

The equivalent of this combination is given by

$$\frac{1}{R_1} = \frac{1}{4} + \frac{1}{10} + \frac{1}{20} = \frac{8}{20}$$

$$\therefore \quad R_1 = \frac{20}{8} = 2.5\ \Omega$$

Similarly Resistances 2 Ω and 3 Ω are in parallel. Hence their equivalent resistance is given by

$$R_2 = \frac{2 \times 3}{2+3} = 1.2\ \Omega$$

Now the resistors 2.5 Ω, 1.2 Ω and 2.3 Ω are in series. So total resistance of this series combinati
= 2.5 + 1.2 + 2.3 = 6 Ω.

This resistance of 6 Ω is in parallel with unknown resistance $R$. So total resistance of the circ

$$= 6 \parallel R = \frac{6R}{R+6}\ \Omega \qquad \text{... (}$$

Again total current = 5 A

and battery voltage = 15 V

$$\therefore \quad \text{Total resistance} = \frac{15}{5} = 3\ \Omega \qquad \text{... (}$$

Now comparing equations (i) with (ii) we get

$$\frac{6R}{R+6} = 3$$

$$\boxed{R = 6\ \Omega}$$

**Syllabus Topic :** Analysis of Simple circuit with DC Excitation

## 1.17 DELTA-STAR AND STAR-DELTA TRANSFORMATION :

- When there are more no. of loops in a network. The network can be simplified using star-delta or del star transformation.

Scanned with CamScanner

### 1.17.1 Delta-Star Transformation :

**GTU, Dec. 2008, 2015, 2016; May-2015. 2016, 2017. 2018**

**GTU Questions**

1. Explain the method of transforming a star network of resistances into delta network and vice versa. **[December-2008, 9-Marks]**
2. Derive expression for delta to star conversion of resistive network. **[April-2010, 6-Marks]**
3. With necessary diagram derive the formula for star to delta and delta to star transformation. **[May-2015, 5-Marks]**
4. Explain the method of transforming a delta connected network into star network. **[May-2017, 4-Marks]**
5. Derive the equation of star to delta and delta to star transformation. **[December-2015, 7-Marks]**
6. Derive equivalent resistances for delta to star transformation. **[May-2018, 6-Marks]**

- It is the replacement of delta connected resistances into equivalent star connected system.
- Suppose three resistances $R_{12}$, $R_{23}$ and $R_{31}$ are connected in delta fashion between the terminals 1, 2 and 3 as shown in fig. 1.35(a).

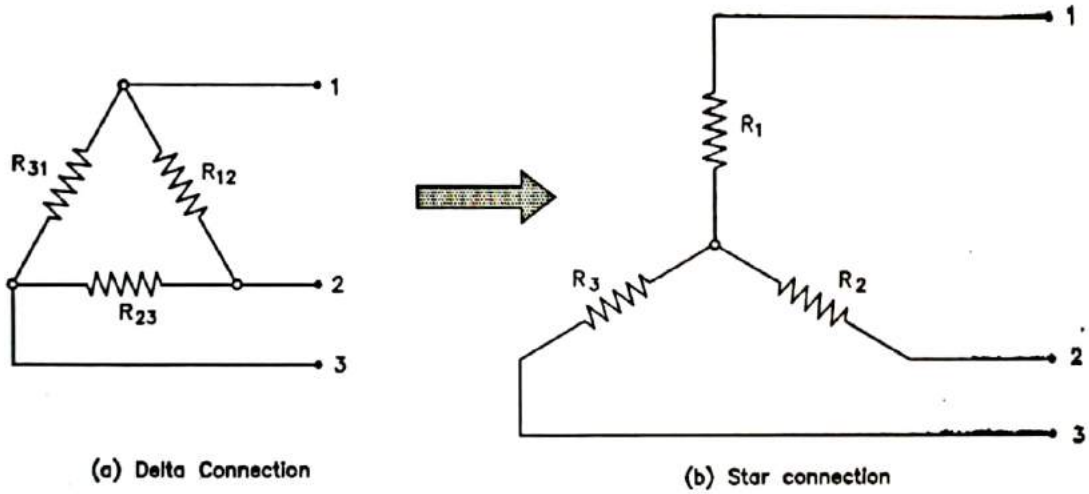


**FIG. 1.35 : DELTA-STAR TRANSFORMATION**

- So far as the respective terminals are concerned, these three resistances ($R_{12}$, $R_{23}$ and $R_{31}$) can be replaced by the three resistances $R_1$, $R_2$ and $R_3$ connected in star system as shown in fig. 1.35(b).
- First consider delta connection. Between the terminals 1 and 2, there are two parallel paths, one having a resistance of $R_{12}$ and the other having a resistance of $(R_{23} + R_{31})$.

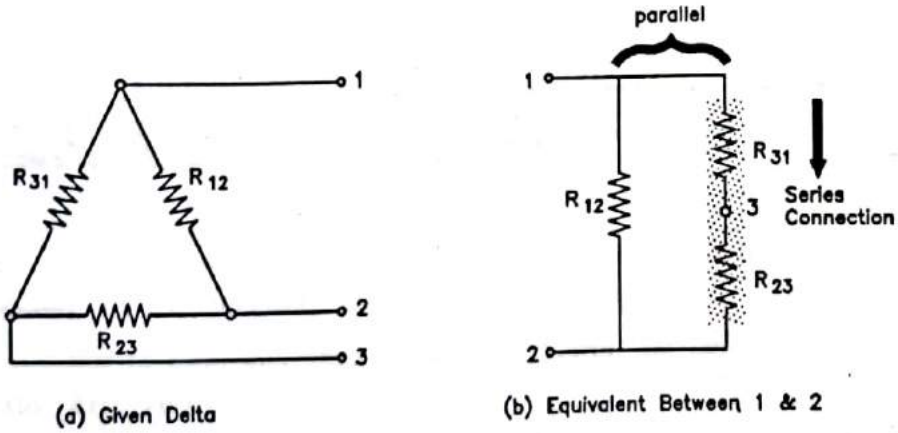


**FIG. 1.36**

Scanned with CamScanner

$\therefore$ Resistance between the terminals 1 and 2 $= R_{12} \parallel (R_{23} + R_{31})$

$$= \frac{R_{12} \times (R_{23} + R_{31})}{R_{12} + R_{23} + R_{31}} \quad \text{... (1)}$$

- Now consider star connection. The resistance between the same terminals 1 and 2 (Fig. 1.35(b) is $(R_1 + R_2)$ ... (2)
- Since the two systems are identical, resistance measured between terminals 1 and 2 in both systems must be equal. Therefore equating the equations (1) and (2), we get.

$$R_1 + R_2 = \frac{R_{12} \times (R_{23} + R_{31})}{R_{12} + R_{23} + R_{31}} \quad \text{..... (3)}$$

Similarly for terminals (2) and (3) and terminals (3) and (1), we get

$$R_2 + R_3 = \frac{R_{23} \times (R_{31} + R_{12})}{R_{12} + R_{23} + R_{31}} \quad \text{..... (4)}$$

$$\text{and } R_3 + R_1 = \frac{R_{31} \times (R_{12} + R_{23})}{R_{12} + R_{23} + R_{31}} \quad \text{..... (5)}$$

Now subtracting (4) from (3) and adding the result to (5) we get,

$$(R_1 + R_2) - (R_2 + R_3) + (R_3 + R_1) = \frac{R_{12} \times (R_{23} + R_{31}) - R_{23} \times (R_{31} + R_{12}) + R_{31} \times (R_{12} + R_{23})}{R_{12} + R_{23} + R_{31}}$$

$$\therefore \quad 2R_1 = \frac{R_{12} R_{23} + R_{12} R_{31} - R_{23} R_{31} - R_{12} R_{23} + R_{12} R_{31} + R_{31} R_{23}}{R_{12} + R_{23} + R_{31}}$$

$$= \frac{2 R_{12} R_{31}}{R_{12} + R_{23} + R_{31}}$$

$$\therefore \quad \boxed{R_1 = \frac{R_{12} R_{31}}{R_{12} + R_{23} + R_{31}}}$$

Similarly

$$\boxed{R_2 = \frac{R_{23} R_{12}}{R_{12} + R_{23} + R_{31}}}$$

$$\text{and } \boxed{R_3 = \frac{R_{31} R_{23}}{R_{12} + R_{23} + R_{31}}}$$

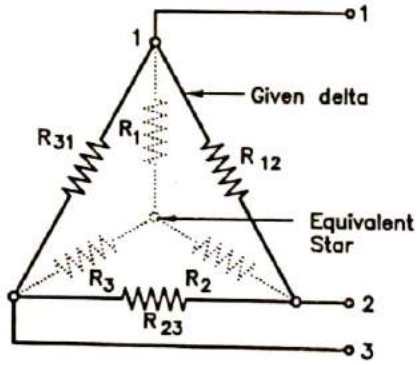


**FIG. 1.37 : DELTA AND EQUIVALENT STAR**

**How to remember the result :**

*The equivalent star resistance to be connected to a given terminals is equal to the product of the two delta resistances connected to the same terminal divided by the sum of the delta resistances.*

### 1.17.2 Star-Delta Transformation :

**GTU, May-2015, 2017, 2018; Dec. 2008, 2012; Jan. 2020**

**GTU Questions**

1. Explain the method of transforming a star network of resistances into delta network and vice versa. **[December-2008, January-2020, 9-Marks]**
2. With necessary diagram derive the formula for star to delta and delta to star transformation. **[May-2015, 2017, 2018, 5-Marks]**
3. Derive the equation of star to delta and delta to star transformation. **[December-2012, 7-Marks]**

Scanned with CamScanner

- It is the replacement of star connected resistances into equivalent delta connected system.
- Let us consider the three resistances $R_1$, $R_2$ and $R_3$ connected in star as shown in Fig. 1.38.
- Now we wants to finding out values of $R_{12}$, $R_{23}$ and $R_{31}$ interms of $R_1$, $R_2$ and $R_3$.

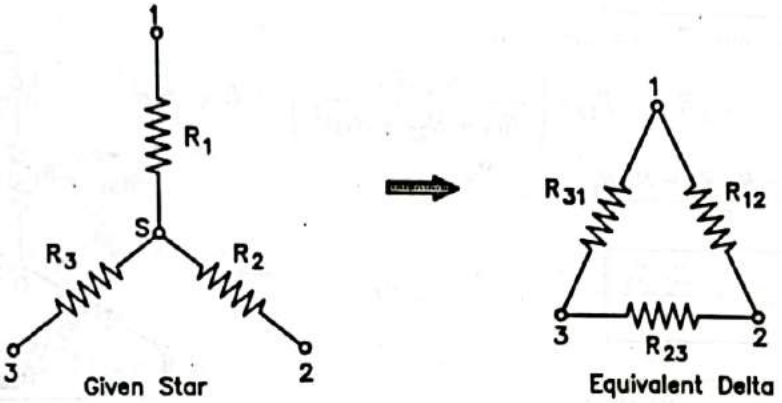


**FIG. 1.38 : STAR-DELTA TRANSFORMATION**

- From the result of Delta-Star transformation we know that,

$$R_1 = \frac{R_{12}\,R_{31}}{R_{12} + R_{23} + R_{31}} \quad \text{... (1)}$$

$$R_2 = \frac{R_{12}\,R_{23}}{R_{12} + R_{23} + R_{31}} \quad \text{... (2)}$$

$$R_3 = \frac{R_{23}\,R_{31}}{R_{12} + R_{23} + R_{31}} \quad \text{... (3)}$$

- Multiplying equation (1) to (2), (2) to (3), and (3) to (1), we get.

$$R_1 R_2 = \frac{R_{12}^2\,R_{23}\,R_{31}}{(R_{12} + R_{23} + R_{31})^2} \quad \text{... (4)}$$

$$R_2 R_3 = \frac{R_{12}\,R_{23}^2\,R_{31}}{(R_{12} + R_{23} + R_{31})^2} \quad \text{... (5)}$$

$$\text{and } R_3 R_1 = \frac{R_{12}\,R_{23}\,R_{31}^2}{(R_{12} + R_{23} + R_{31})^2} \quad \text{... (6)}$$

- Adding the equations (4), (5) and (6) we get,

$$R_1 R_2 + R_2 R_3 + R_3 R_1 = \frac{R_{12}\,R_{23}^2\,R_{31} + R_{12}\,R_{23}^2\,R_{31} + R_{12}\,R_{23}\,R_{31}^2}{(R_{12} + R_{23} + R_{31})^2}$$

$$= \frac{R_{12}\,R_{23}\,R_{31}\,(R_{12} + R_{23} + R_{31})}{(R_{12} + R_{23} + R_{31})^2}$$

$$= \frac{R_{12}\,R_{23}\,R_{31}}{(R_{12} + R_{23} + R_{31})} \quad \text{... (7)}$$

- The equation (7) can be written as

$$R_1 R_2 + R_2 R_3 + R_3 R_1 = R_{12} \times \left(\frac{R_{23}\,R_{31}}{(R_{12} + R_{23} + R_{31})}\right)$$

$$= R_{12} \times R_3 \qquad \text{[from equation (3)]}$$

Scanned with CamScanner

$$\therefore \quad R_{12} = \frac{R_1 R_2 + R_2 R_3 + R_3 R_1}{R_3}$$

$$= \boxed{R_1 + R_2 + \frac{R_1 R_3}{R_3}}$$

Similarly from equation (7), we can write.

$$R_1 R_2 + R_2 R_3 + R_3 R_1 = R_{12} \times \left( \frac{R_{31} R_{12}}{(R_{12} + R_{23} + R_{31})^2} \right) = R_{23} \times R_1$$

$$\therefore \quad R_{23} = \frac{R_1 R_2 + R_2 R_3 + R_3 R_1}{R_1}$$

$$= \boxed{R_2 + R_3 + \frac{R_2 R_3}{R_1}} \quad \text{... (9)}$$

Similarly

$$\boxed{R_{31} = R_3 + R_1 + \frac{R_3 R_1}{R_2}} \quad \text{... (10)}$$

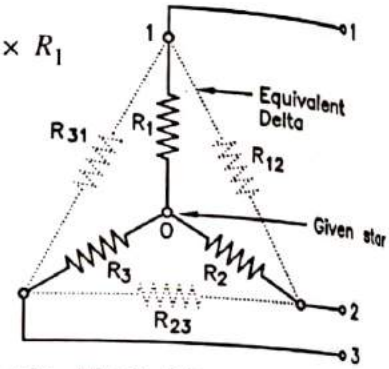


FIG. 1.39 : STAR AND EQUIVALENT DELTA

**How to remember the result :**

*The equivalent delta resistance to be connected between the two given terminals is the sum of the two star resistances connected to those terminals plus the product of the same two star resistances devided by the third star resistance.*

**Example-1.12 :**

**Three resistance of 5 Ω, 10 Ω and 15 Ω are connectred in star connection. Find equivalent resistances in delta connection.**

**GTU, June-2010**

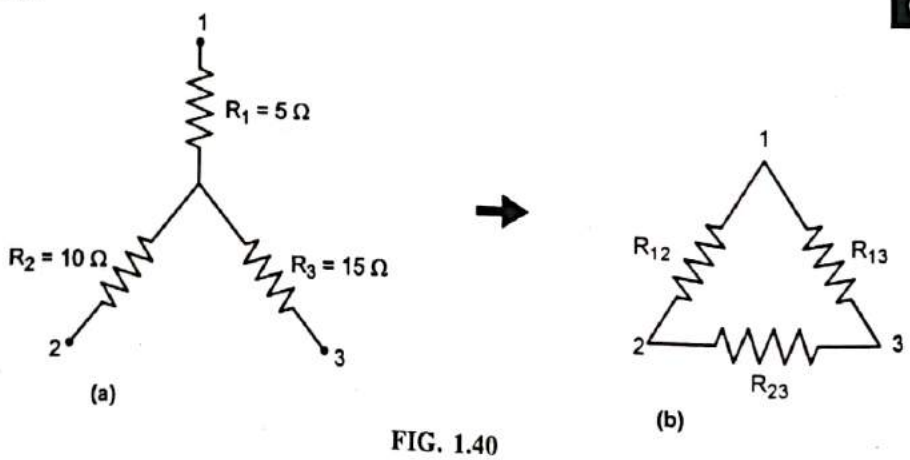


FIG. 1.40

***Solution :***

**Given data :**

$$R_1 = 5\,\Omega, \quad R_2 = 10\,\Omega, \quad R_3 = 15\,\Omega$$

Convert star of Fig. 1.40(a) to an equivalent delta

$$R_{12} = R_1 + R_2 + \frac{R_1 \cdot R_2}{R_3}$$

$$= 5 + 10 + \frac{(5 \times 10)}{15}$$

$$= 5 + 10 + 3.33$$

$$= \boxed{18.33\,\Omega}$$

Scanned with CamScanner

$$R_{13} = R_1 + R_3 + \frac{(R_1 \times R_3)}{R_2}$$

$$= 5 + 15 + \frac{(5 \times 15)}{10}$$

$$= 5 + 15 + 7.5 = \boxed{27.5\ \Omega}$$

$$R_{23} = R_2 + R_3 + \frac{(R_2 \times R_3)}{R_1}$$

$$= 10 + 15 + \frac{(20 \times 15)}{5}$$

$$= 10 + 15 + 30 = \boxed{55\ \Omega}$$

**Example-1.13 :**

**Find out resistance between terminals A and B.** **GTU, May-2009**

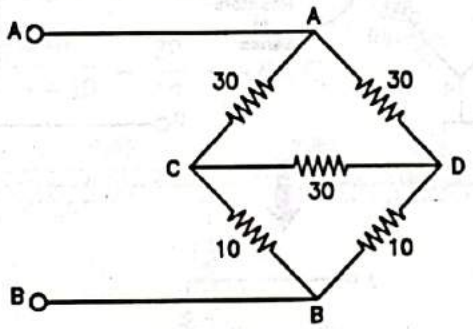


**FIG. 1.41**

***Solution :***

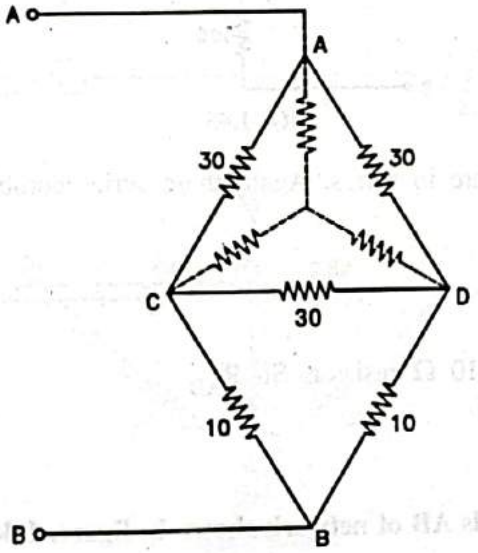


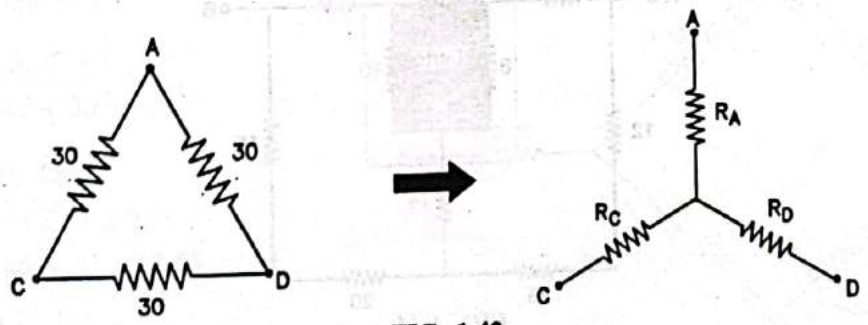


**FIG. 1.42**

Scanned with CamScanner

First convert Δ ACD into Star.

$$R_A = R_C = R_D = \frac{30 \times 30}{30 + 30 + 30}$$

$$= \frac{900}{90}$$

$$= 10\ \Omega$$

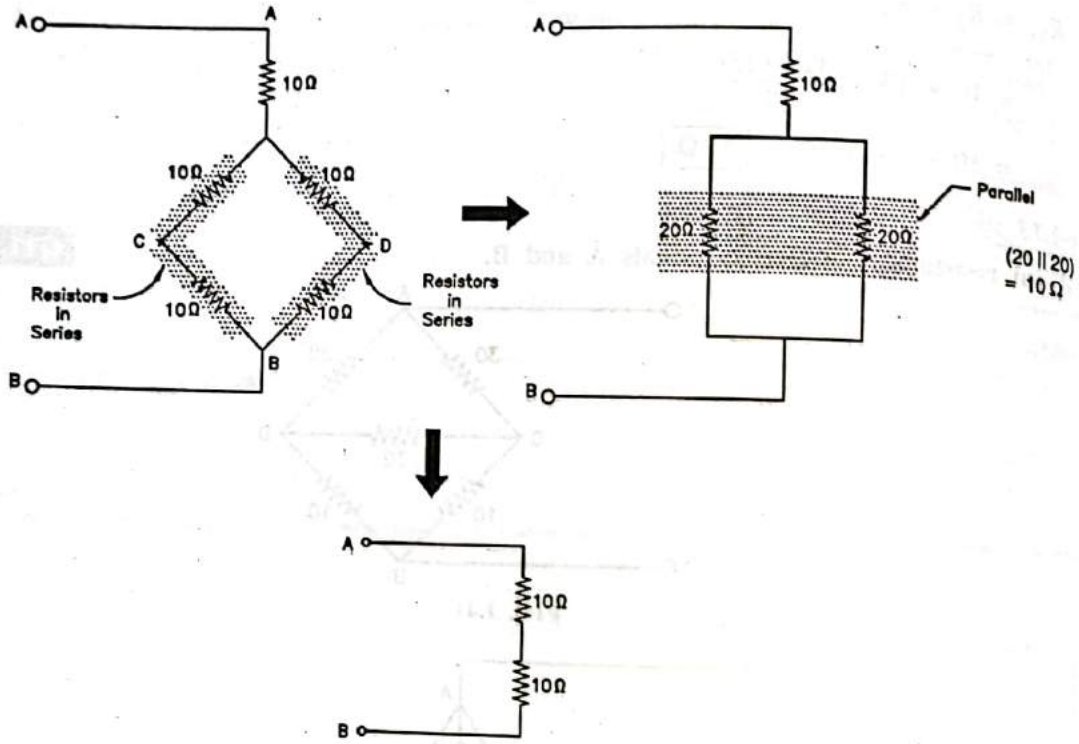


FIG. 1.43

The reisitances 10 Ω & 10 Ω are in series. Again these series combinations are in parallel. thus their equivalent resistance is given by

$$R_1 = 20 \parallel 20 = 10\ \Omega$$

Now,

10 Ω resistor is in series with 10 Ω resistor. So $R_{AB}$

$$R_{AB} = 10 + 10 = \boxed{20\ \Omega}$$

**Example-1.14 :**

**Find resistance between terminals AB of network shown in figure. 1.44 using star delta transformation.**

**GTU, June-2015**

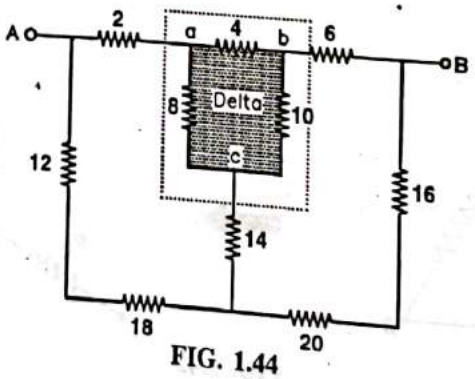


FIG. 1.44

Scanned with CamScanner

*Solution :*

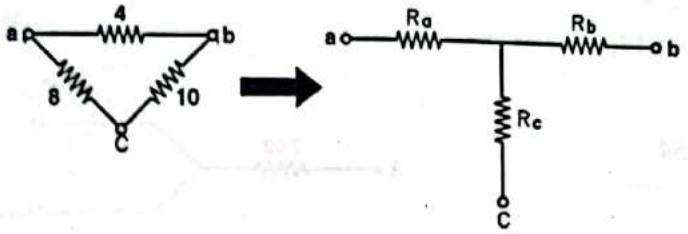


FIG. 1.45

First of all convert delta abc into star

$$R_a = \frac{R_{ab} \times R_{ac}}{R_{ab} + R_{bc} + R_{ac}} = \frac{4 \times 8}{4 + 8 + 10} = \frac{32}{22} = 1.45\ \Omega$$

$$R_b = \frac{R_{ab} \times R_{bc}}{R_{ab} + R_{bc} + R_{ac}} = \frac{4 \times 10}{4 + 8 + 10} = \frac{40}{22} = 1.82\ \Omega$$

$$R_c = \frac{R_{ac} \times R_{bc}}{R_{ab} + R_{bc} + R_{ac}} = \frac{8 \times 10}{4 + 8 + 10} = \frac{80}{22} = 3.63\ \Omega$$

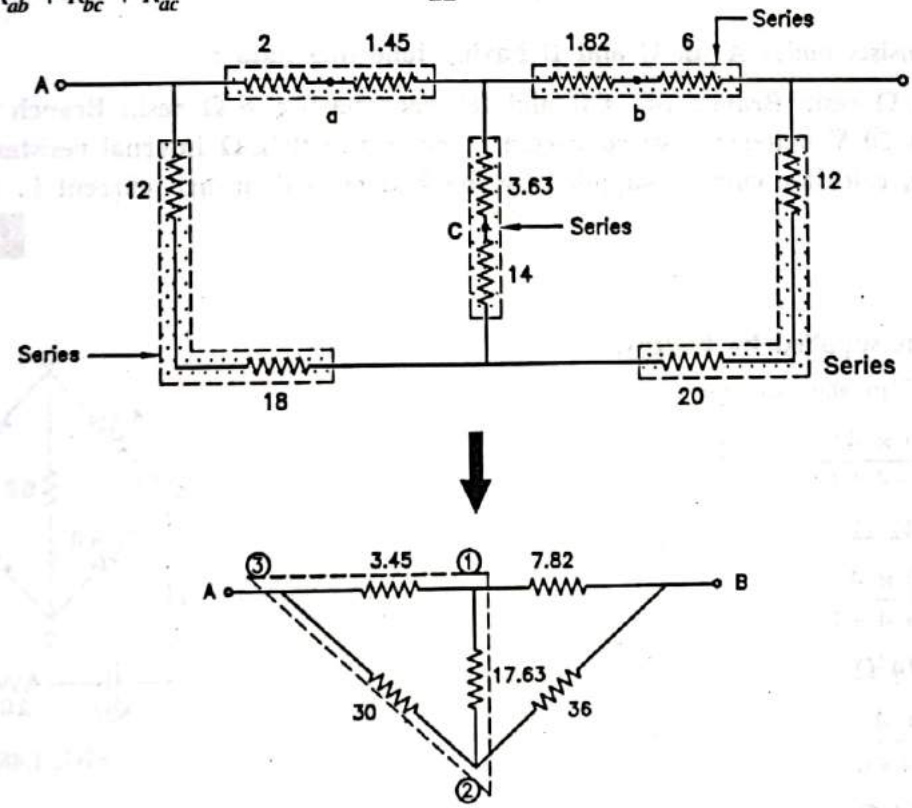


FIG. 1.46

Convert Δ123 into star

$$R_1 = \frac{3.45 \times 17.63}{3.45 + 30 + 17.63}$$

$$= 1.19\ \Omega$$

$$R_2 = \frac{17.63 \times 30}{3.45 + 30 + 17.63}$$

$$= 10.35\ \Omega$$

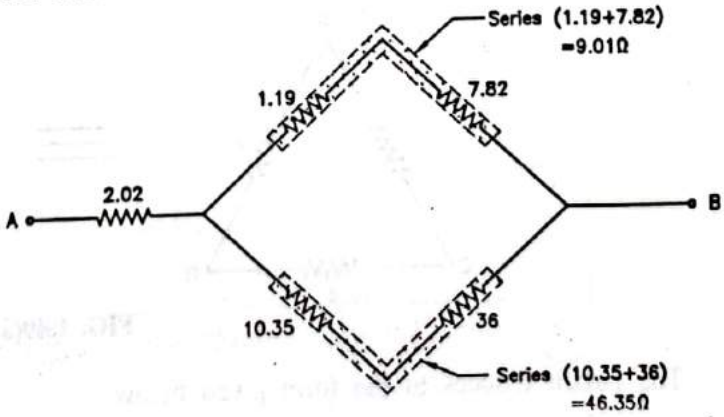


Scanned with CamScanner

$$R_3 = \frac{3.45 \times 30}{3.45 + 30 + 17.63}$$

$$= 2.02\ \Omega$$

$$R_{AB} = 2.02 + 7.54$$

$$= \boxed{9.56\ \Omega}$$

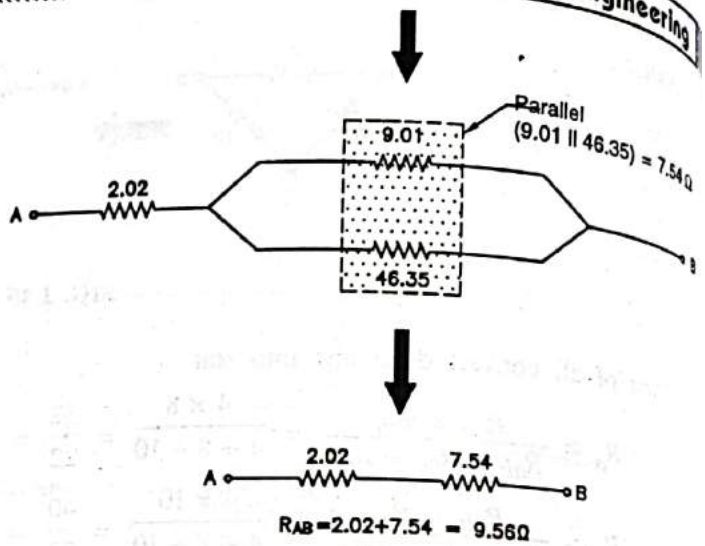


FIG. 1.47

**Example-1.15 :**

**A network consists nodes A, B, C and D having following data :**

**Branch AB; 4 Ω resi.; Branch BC, CD and DB each having, 6 Ω resi.; Branch AC : 4 Ω resi. Branch AD consists 50 V battery; + ve connected to node A with 2 Ω internal resistance. Using delta star transformation, calculate current supplied by the battery and branch current in AB.**

**GTU, Dec. 2008**

***Solution :***

**Case-1 :**

**To find current supplied by battery.**

Convert Δ ABC to star, we get

$$R_A = \frac{4 \times 4}{4 + 4 + 6}$$

$$= 1.142\ \Omega$$

$$R_B = \frac{6 \times 4}{4 + 4 + 6}$$

$$= 1.714\ \Omega$$

$$R_C = \frac{6 \times 4}{4 + 4 + 6}$$

$$= 1.714\ \Omega$$

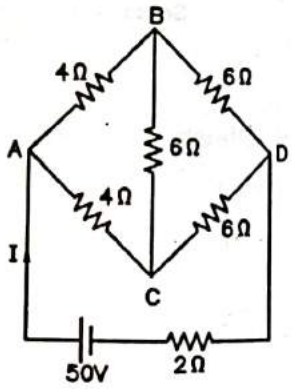


FIG. 1.48

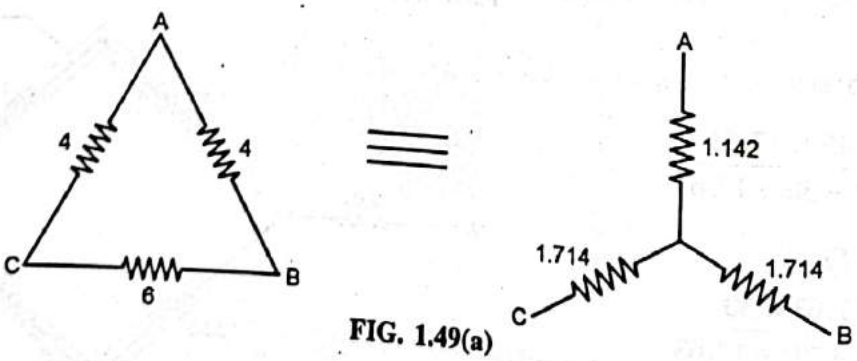


FIG. 1.49(a)

The circuit reduces to the form given below.

Scanned with CamScanner

On further simplification.

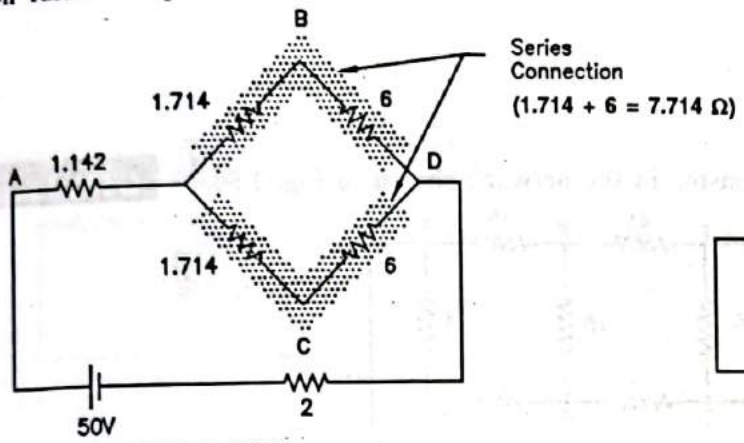


FIG. 1.49(b)

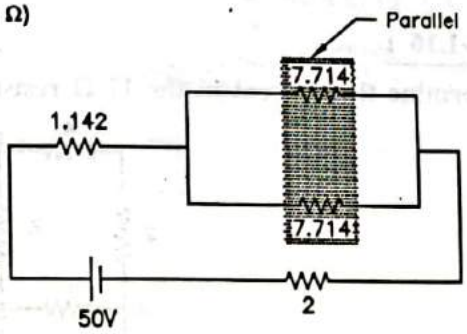


FIG. 1.49(c)

Total resistance is given by

$$R = 2 + 1.142 + [7.714 \parallel 7.714]$$

$$= 2 + 1.142 + \frac{7.714}{2}$$

$$= 6.999\ \Omega$$

$\therefore$ Current supplied by battery $= \dfrac{V}{R} = \dfrac{50}{6.999}$

$$\boxed{I = 7.14\ A}$$

**Case-2 :**

**To Find Brach Current AB :**

Converting ΔBCD to star BCD we get

On simplification

$$R_B = R_C = R_D = \frac{6 \times 6}{6+6+6}$$

$$= \frac{36}{18}$$

$$= 2\ \Omega.$$

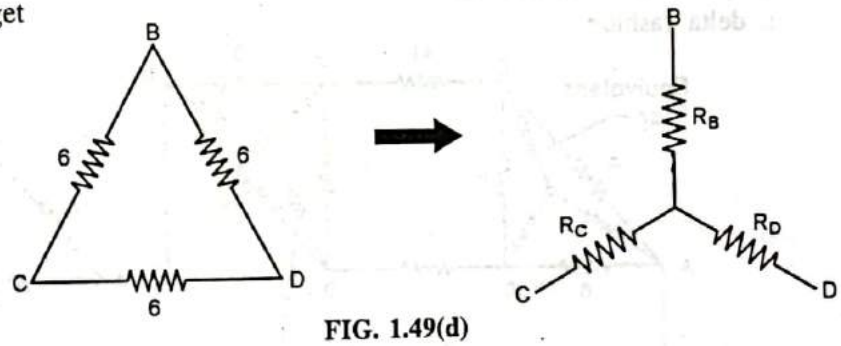


FIG. 1.49(d)

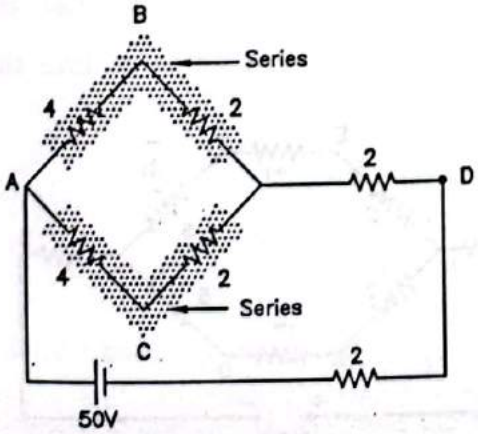


FIG. 1.49(e)

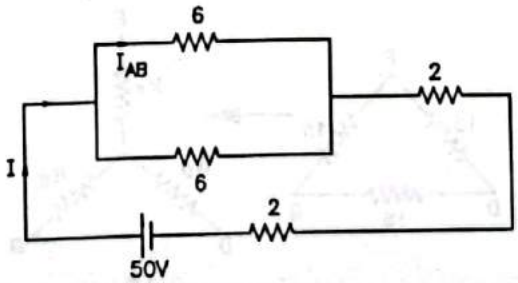


FIG. 1.49(f)

Scanned with CamScanner

Current will divide equally in 6 Ω resistors as they are connected in parallel.

$$\therefore \quad I_{AB} = \frac{I}{2} = \frac{7.14}{2} = \boxed{3.57\ A}$$

**Example-1.16 :**

**Determine the current in the 17 Ω resistor in the network shown in Fig. 1.50.** GTU, June-20

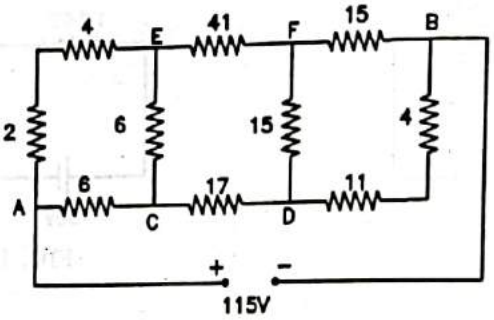


FIG. 1.50

***Solution :***

- The resistances of 11 Ω and 4 Ω are in series and similarly 2 Ω and 4 Ω are in series. Combining the series combinations we get the circuit as shown in Figure 1.52 (a).
- The resistances between the points A, C and E are in delta. Similarly resistances between the points D, B and F are also in delta fashion.

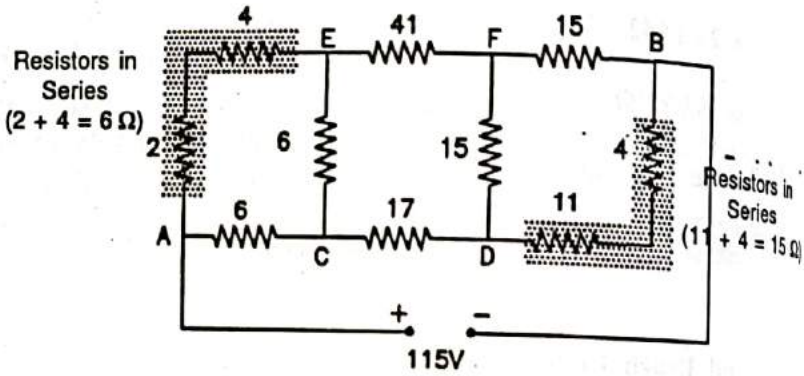


FIG. 1.51

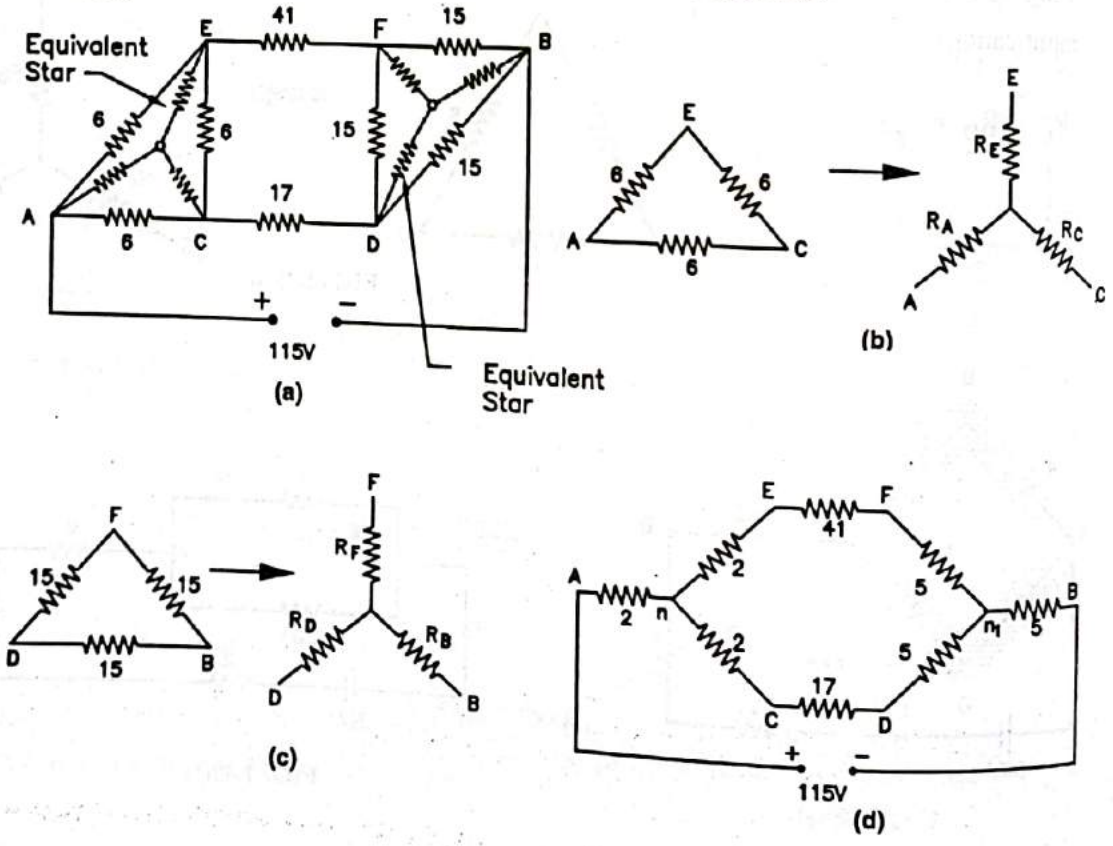


Scanned with CamScanner

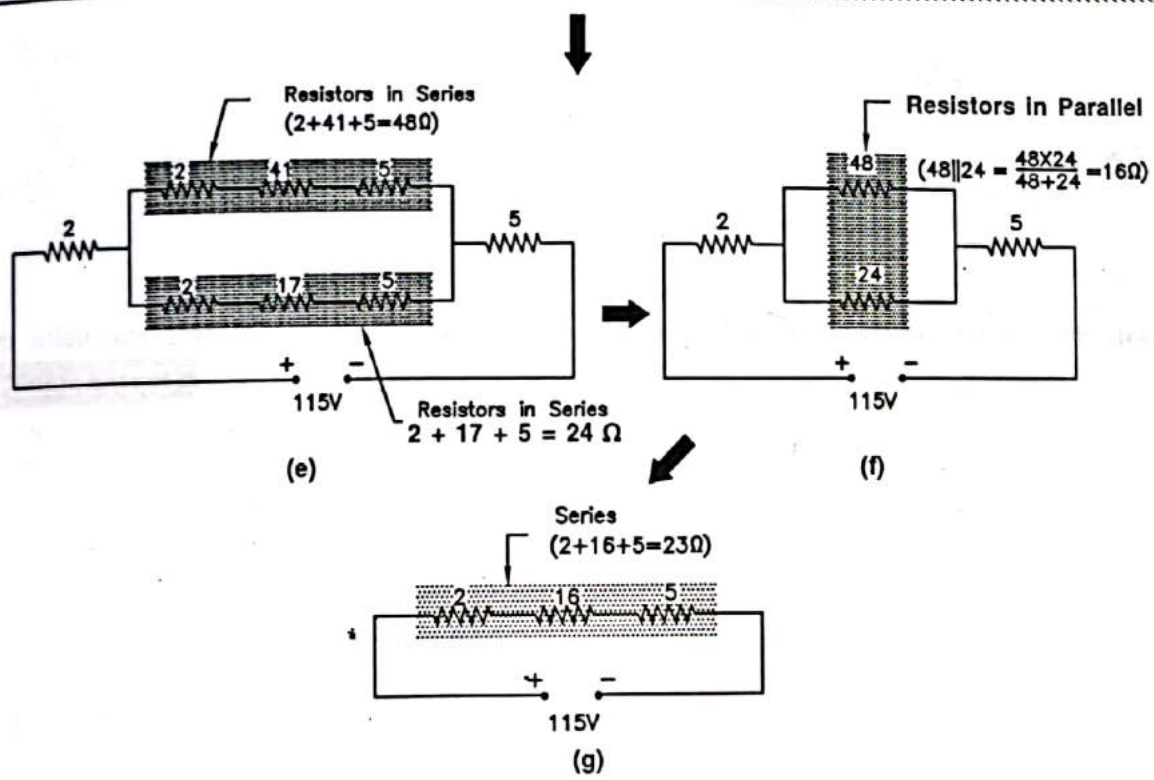


FIG. 1.52

Applying Δ/Y transformation,

$$R_E = R_A = R_C = \frac{6 \times 6}{6+6+6} = 2\ \Omega$$

$$R_D = R_F = R_B = \frac{15 \times 15}{15+15+15} = 5\ \Omega$$

After Δ/Y transformation, the network can be represented as shown in Fig. 1.52(d).

The above circuit can be redrawn as shown in figure 1.52(e).

The resistances of 2 Ω, 41 Ω and 5 Ω are in series. Similarly the resistances of 2 Ω, 17 Ω and 5 Ω are in series. So their equivalent resistances with be given by (2 + 41 + 5) = 48 Ω and (2 + 17 + 5) = 24 Ω respectively.

Now above network of Fig. 1.52(e) can be represented as shown in Fig. 1.52(f).

In the circuit of figure 1.52(f) 24 Ω and 48 Ω resistors are in parallel and this parallel combination is in series with 2 Ω and 5 Ω resistors.

So the total circuit resistance $= 2 + 5 + 24 \| 48$

$$= 2 + 5 + \frac{24 \times 48}{24 + 48}$$

$$= 7 + 16$$

$$= 23\ \Omega$$

The current taken by the circuit $= \frac{115}{23} = \boxed{5\ A}$

The current through 17 Ω resistor is the same as the current in 24 Ω resistor of Fig. 1.52(f). The circuit current divides in 24 Ω and 48 Ω. So current in 17 Ω resistor is given by,

Scanned with CamScanner

$$I = 5 \times \frac{48}{48+24}$$

$$I = 5 \times \frac{48}{72}$$

$$= \boxed{3.33 \text{ A}}$$

**Example-1.17 :**

**Calculate the current flowing through the 10 Ω resistor of Fig. 1.53 by using star/delta method.**

**GTU, January-2010**

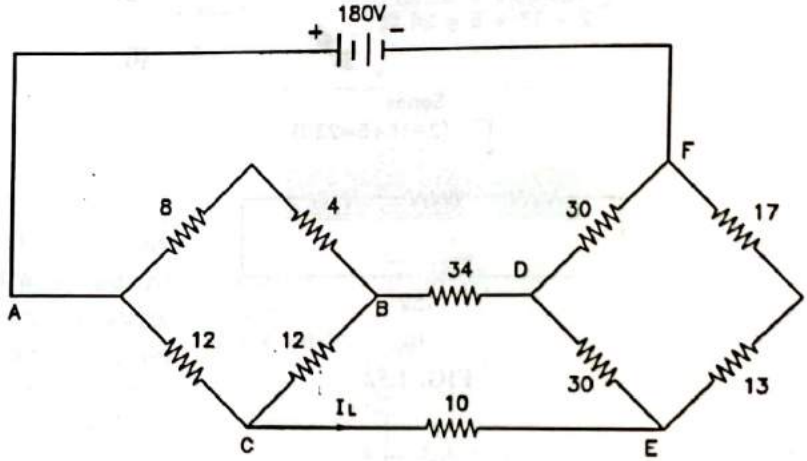


**FIG. 1.53**

***Solution :***

Redrawing the circuit as follows :

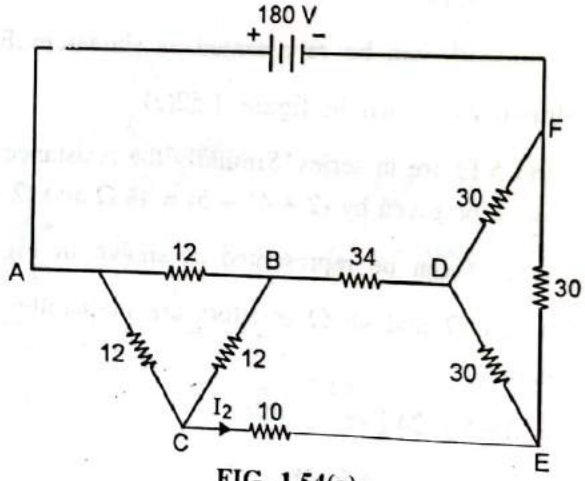


**FIG. 1.54(a)**

It is seen that there are two deltas in the circuit i.e. ABC and DEF. Converting these deltas in to their equivalent stars as shown in Fig. 1.54(b).

where, $R_A = R_B = R_C = \dfrac{12 \times 12}{12+12+12} = 4\ \Omega,$

$$R_D = R_E = R_F = \frac{30 \times 30}{30+30+30} = 10\ \Omega$$

The modified circuit is shown in Fig. 1.54(c)

Scanned with CamScanner

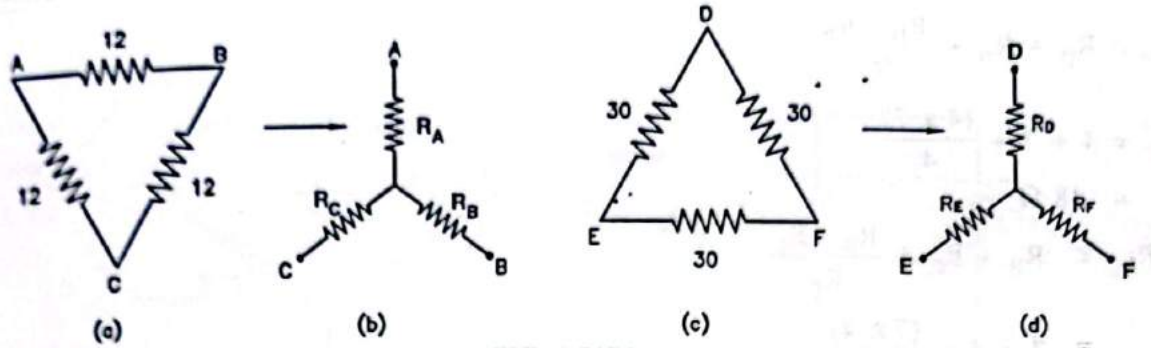


FIG. 1.54(b)

The total circuit resistance

$$R_{eq} = 4 + 10 + (4 + 34 + 10) \parallel (4 + 10 + 10)$$
$$= 14 + (48 \parallel 24)$$
$$= 30\ \Omega$$

Hence, the current supplied by source

$$I = \frac{V}{R_{eq}} = \frac{180}{30} = 6\ A$$

Using current division rule,

Current $I_L = I \times \frac{48}{48+24}$ through 10 Ω resistance.

$$= 6 \times \frac{48}{48+24}$$
$$= \boxed{4\ A}$$

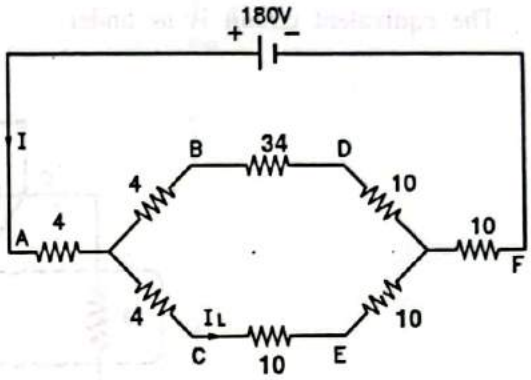


FIG. 1.54(c)

**Example-1.18 :**

**Find the resistance between the terminals A and B in the network shown in the Fig. 1.55.**

**GTU, June-2010**

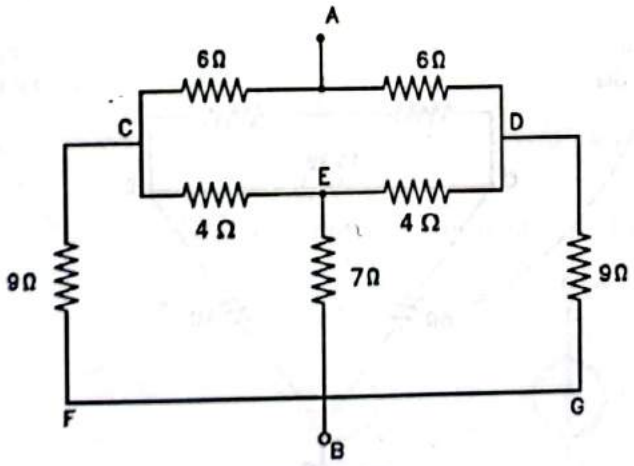


FIG. 1.55

***Solution :***

**Convert star CEDB to delta equivalent :**

$$\therefore\ R_{CD} = R_C + R_D + \frac{R_C \times R_D}{R_B}$$
$$= 4 + 4 + \frac{(4 \times 4)}{7}$$
$$= 10.285$$
$$\cong 10.29\ \Omega$$

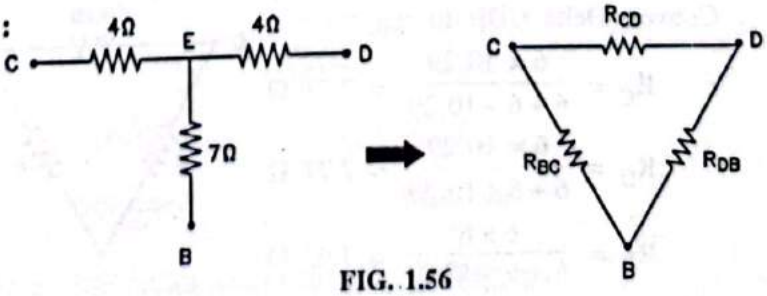


FIG. 1.56

Scanned with CamScanner

$$R_{DB} = R_D + R_B + \frac{R_D \times R_B}{R_C}$$

$$= 4 + 7 + \frac{(4 \times 7)}{4}$$

$$= 18\ \Omega$$

$$\therefore\ R_{BC} = R_B + R_C + \frac{R_B \times R_C}{R_D}$$

$$= 7 + 4 + \frac{(7 \times 4)}{4}$$

$$= 18\ \Omega$$

The equivalent circuit is as under,

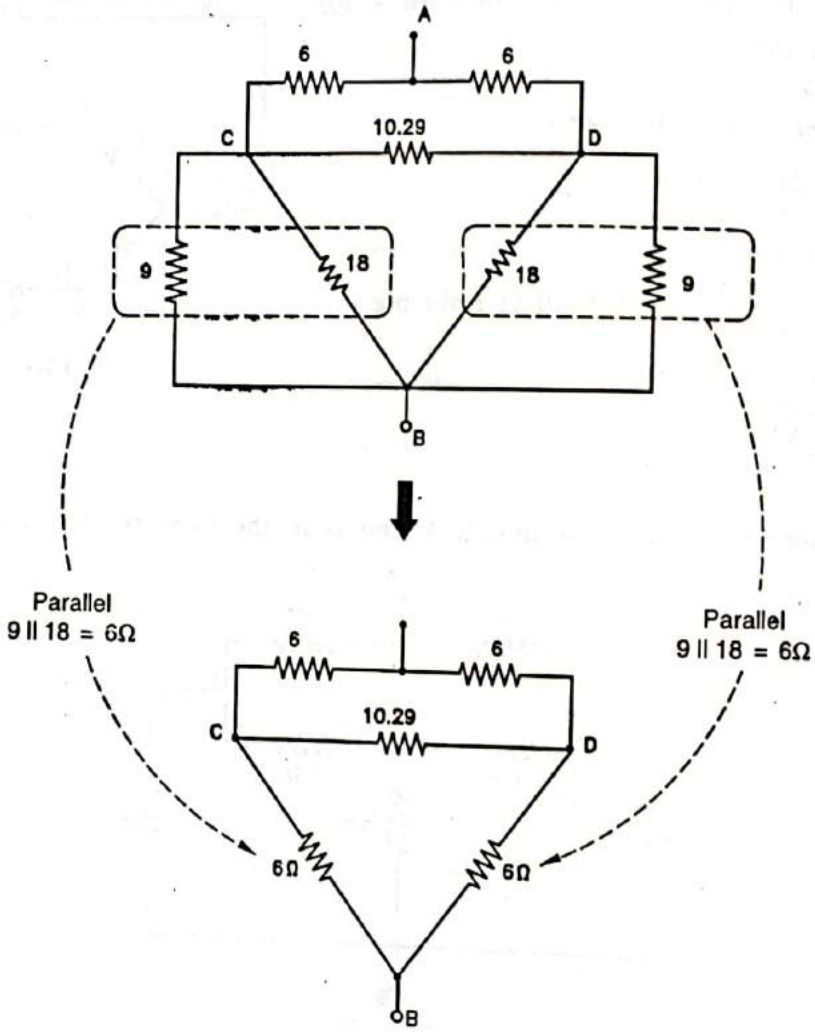


FIG. 1.57

Convert Delta CDB to star :

$$R_C = \frac{6 \times 10.29}{6 + 6 + 10.29} = 2.77\ \Omega$$

$$R_D = \frac{6 \times 10.29}{6 + 6 + 10.29} = 2.77\ \Omega$$

$$R_B = \frac{6 \times 6}{6 + 6 + 10.29} = 1.62\ \Omega$$

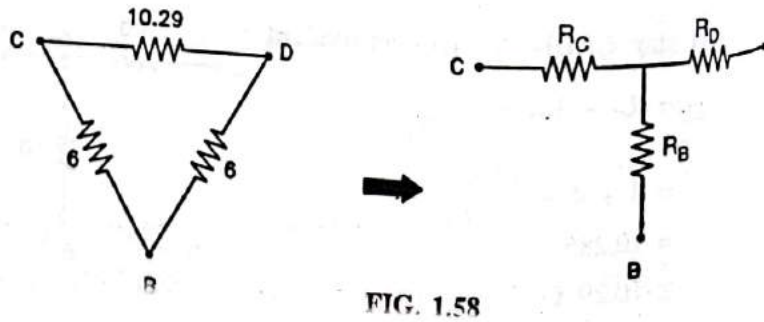


FIG. 1.58

Scanned with CamScanner

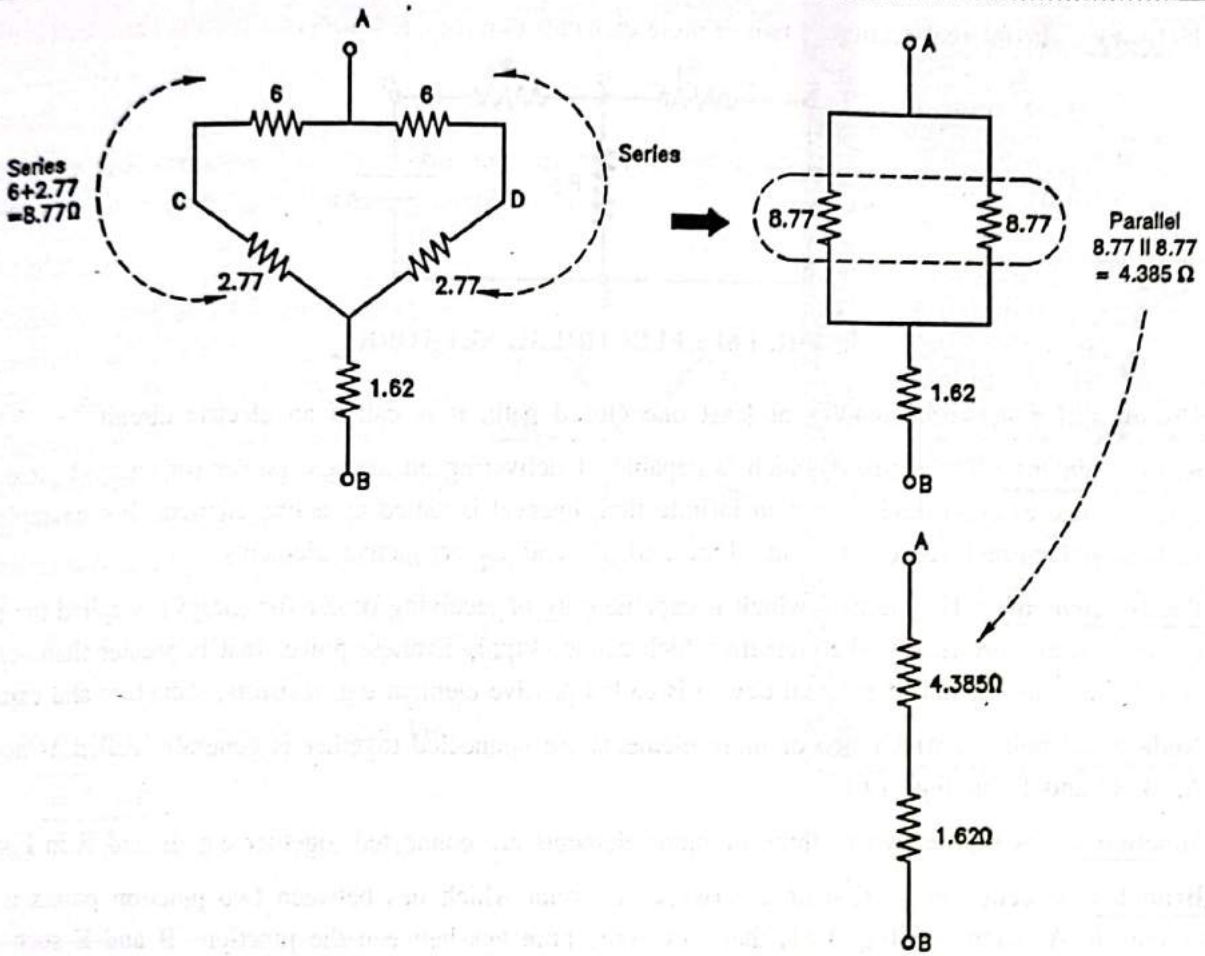


FIG. 1.59

$\therefore \quad R_{AB} = 4.385 + 1.62 = \boxed{6.005\ \Omega}$

## 1.18 NETWORK TERMINOLOGY :

**1. Element :** It is a mathematical model of two terminal electrical device which can be completely characterised by its voltage and current.

- The symbols for the various circuit elements are given in Fig. 1.60

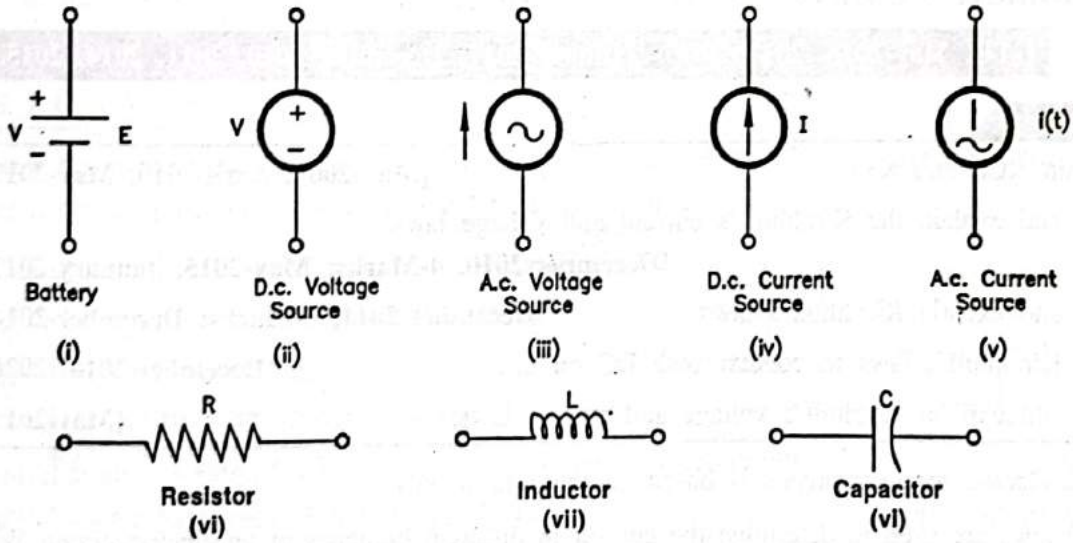


FIG. 1.60 : REPRESENTATION OF SOURCES AND CIRCUIT ELEMENTS



Scanned with CamScanner

2. **Network :** The interconnection of two or more elements (sources, resistors etc) is called an electric network.

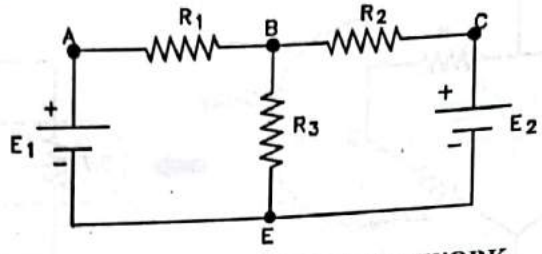


FIG. 1.61 : ELECTRICAL NETWORK

3. **Circuit :** If a network contains at least one closed path, it is called an electric circuit.
4. **Active element :** The element which is capable of delivering an average power (or energy) greater than zero to some external device over an infinite time interval is called an active element. For example, ideal voltage and current sources e.g. in Fig. 1.61 $E_1$ and $E_2$ are active elements.
5. **Passive elements :** The element which is capable only of receiving power (or energy) is called the passive element. More specifically, the element which cannot supply average power that is greater than zero over an infinite time internal to external device is called passive element e.g. resistors, inductors and capacitors.
6. **Node :** The point at which two or more elements are connected together is generally called as node e.g. A, B, C and E, in Fig. 1.61
7. **Junction :** It is a point where three or more elements are connected together e.g. B and E in Fig. 1.61.
8. **Branch :** A section or portion of a network or circuit which lies between two junction points is called as branch. As shown in Fig. 1.61, there are three branches between the junctions B and E such as BE, BAE and BCE.
9. **Loop :** Any closed path in a network is called a loop e.g. ABEA, BCEB, ABCEA are the loops in Fig. 1.61.
10. **Mesh :** It is the most elementary form of a loop and cannot be further divided into other loops e.g. ABEA and BCEB are the meshes in Fig. 1.61 because they cannot be further divided into other closed paths (or loops). But ABCEA cannot be called as mesh because it encloses two loops ABEA and BCEB.

**Syllabus Topic :** Kirchhoff's Current and Voltage Laws

## 1.19 KIRCHHOFF'S LAWS :

**GTU, May-2015, 2017, 2019; January-2017; December-2010, 2011, 2014, 2015, 2016, 2020**

**GTU Questions**

1. *Explain KCL and KVL.* **[May-2009, April-2010, May-2017, 4-Marks]**
2. *State and explain the Kirchhoff's current and voltage laws.* **[December-2010, 4-Marks; May-2015, January-2017, 3-Marks]**
3. *State and explain Kirchhorr's laws.* **[December-2011, 5-Marks; December-2014, 3-Marks]**
4. *State Kirchhoff's laws in context with DC circuit.* **[December-2016, 2020, 3-Marks]**
5. *State and explain Kirchoff's voltage and current laws.* **[May-2019, 3-Marks]**

- *Entire electric circuit analysis is based on these laws only.*
- *These laws are used to determine the current in different branches of an electric circuit Which may not be easily solved by Ohm's law. These laws are applicable to both AC and DC circuits.*

Scanned with CamScanner

## 1. Kirchhoff's first law or Kirchhoff's current law (KCL) or point law :

**Statement :**

- It states that the algebraic sum of all the currents meeting at a junction or a node in any electric circuit is zero.

**Explanation :**

- Consider the case of a few conductors meeting at point M as shown in Fig. 1.62. The arrows indicate the direction of current flow. Accordingly, the currents $I_1$ and $I_3$ are coming towards the junction M and the currents $I_2$ and $I_4$ and $I_5$ are going away from the junction. Assume positive sign for incoming currents and negative sign for outgoing currents.

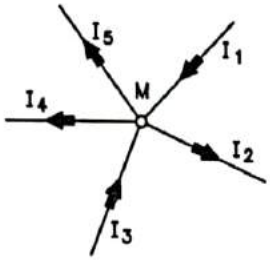


FIG. 1.62 CURRENTS MEETING AT M NODE

- According to Kirchhoff's current law.

$$\boxed{\Sigma I = 0}$$

i.e. $(+I_1) + (-I_2) + (+I_3) + (-I_4) + (-I_5) = 0$

$\therefore \quad I_1 + I_3 = I_2 + I_4 + I_5$

$\boxed{\text{i.e. incoming currents = outgoing currents.}}$

- The above law (KCL) can also be stated as :

  The sum of currents flowing towards any junction in an electric circuit is equal to the sum of the currents flowing away from that junction.

**GUSTAV ROBERT KIRCHHOFF (1824-1887)**

Gustav Robert Kirchhoff (1824-1887)

He was German physicist, professor at Heidelberg and at Berlin. Mainly known for his development of spectroscopy, he also made many important contributions to mathematical physics, among them, his first and second rules for circuits.

## 2. Kirchhoff's second law or Kirchhoff's voltage Law (KVL) or Mesh law :

**Statement :**

- In any closed path (mesh or loop) of an electric circuit, the algebraic sum of product of current and resistance in each of the conductors plus the algebraic sum of electromotive forces (emfs) in that closed path is zero.

$$\boxed{\text{i.e. } \Sigma IR + \Sigma \text{ emf} = 0}$$

- As algebraic sum is to be taken, we have to determine their signs while tracing a circuit. For this we consider a rise in potential as + ve and a fall in potential as - ve.

**Sign for e.m.f. :**

- Consider a branch AB containing a source of e.m.f. (E) as shown in Fig. 1.63
- If we travel from -ve side of battery to +ve side of battery, there is rise in potential so postive sign should be given.
- If we travel from +ve side of battery to -ve side of battery, there is fall in potential so negative sign should be given.

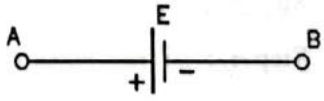


FIG. 1.63 : DETERMINATION OF SIGN FOR EMF

- If we travel from A to B there is a fall in potential, and therefore E is negative.

Scanned with CamScanner

- However if we travel it from B to A, there is rise in potential and so E will be positive. In short,

  From branch A to B, E is negative i.e. – E

  From branch B to A, E is positive i.e. + E

  **Note :** Direction of flow of current through the source has no effect.

**Signs for IR drops :**

- Current flows from higher potential to lower potential.
- If we travel in the direction of current, there is drop in potential so negative sign should be given.
- If we travel in the opposite direction to flow of current, there is rise in potential so positive sigh should be given.
- To determine sign for the voltage drop in a resistance, consider a branch containing a resistor of resistance R in which current I flows from A to B as shown in Fig. 1.64

**FIG. 1.64 : DETERMINATION OF SIGN FOR IR DROP**

- The current flows from A to B. Therefore A is at higher potential with respect to B. If we travel from A to B, $V = IR$ is negative i.e. $(-IR)$ ($\because$ fall in potential) and If we travel from B to A, $V = IR$ is positive (i.e. $+ IR$), ($\because$ rise in potential)
- Thus, it is clear that the sign of voltage drop across a resistor depends on the direction of current through that resistor but is independent of the polarity of any other source of e.m.f. in the circuit under consideration.
- Applying Kirchoff's second law to the loop ABCDA (travelling in clockwise direction starting from node R)

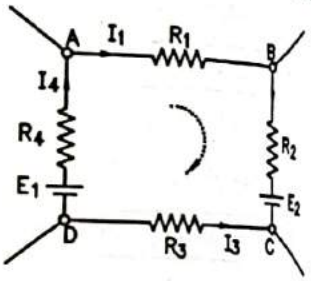


**FIG. 1.65**

Tracing the circuit in a clockwise direction

$$(-I_1R_1) + (-I_2R_2) + (-E_2) + (+I_3R_3) + (+E_1) + (-I_4R_4) = 0$$

$$I_1R_1 + I_2R_2 - I_3R_3 + I_4R_4 = E_1 - E_2$$

$\therefore$ $\boxed{\text{Voltage drop} = \text{Voltage rise}}$

**It can be stated as**

- In a closed path, the sum of voltage drops due to resistances is equal to the sum of voltage rises due to sources of e.m.f.s.

### 1.19.1 Method of Solution by Kirchhoff's Laws :

**Step-1 :** Assume unknown currents in the given circuit and indicate their directions arbitrarily by arrows.

**Step-2 :** Choose any closed path and equate the algebraic sum of voltages across the resistances plus the algebraic sum of emfs to zero.

**Step-3 :** Obtain the equations in terms of unknown currents

**Step-4 :** Write equations for as many closed paths (loops) as the number of currents.

**Step-5 :** Obtain the unknown currents by solving the equations.

**Step-6 :** If the value of the assumed current comes out to be negative, it means that actual direction of current is opposite to that of the assumed direction.

Scanned with CamScanner

**Example-1.19 :**

**Two batteries A and B are connected in parallel and combination is connected across 10 ohm resistance. Battery A has an internal resistance of 0.2 ohm and internal voltage is 110 V and the corresponding values of battery B are 0.25 ohm and 100 V. Calculate current in each battery and into 10 ohm resistance.**

***Solution :***

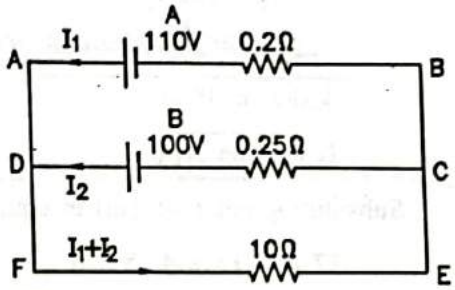


FIG. 1.66

Applying KVL around AFEBA

$$10\,(I_1 + I_2) + 0.2\,I_1 = 110$$

$$10.2\,I_1 + 10\,I_2 = 110 \qquad \text{... (1)}$$

Applying KVL around DFECD

$$10\,(I_1 + I_2) + 0.25\,I_2 = 100$$

$$10\,I_1 + 10.25\,I_2 = 100 \qquad \text{... (2)}$$

From eqn. (1)

$$I_1 = \frac{110 - 10\,I_2}{10.2} \qquad \text{... (3)}$$

Substituting the $I_1$ from equation (3) in equation (2), we get

$$10\left(\frac{110 - 10\,I_2}{10.2}\right) + 10.25\,I_2 = 100$$

$$1100 - 100\,I_2 + 104.55\,I_2 = 1020$$

$$\therefore\ I_2 = -\frac{80}{4.55} = \boxed{-17.58\text{ A (D to C)}}$$

Now $I_1 = \dfrac{110 - 10\,I_2}{10.2} = \dfrac{110 - 10\,(-17.58)}{10.2} = \boxed{28.02\text{ A (B to A)}}$

Current in 10 Ω resistor $= I_1 + I_2 = 28.02 + (-17.58) = \boxed{10.44\text{ A (F to E)}}$

**Example-1.20 :**

**From the figure given below, find the current flowing through 10 Ω resistance, using Kirchoff's law.**

**GTU, May-2010**

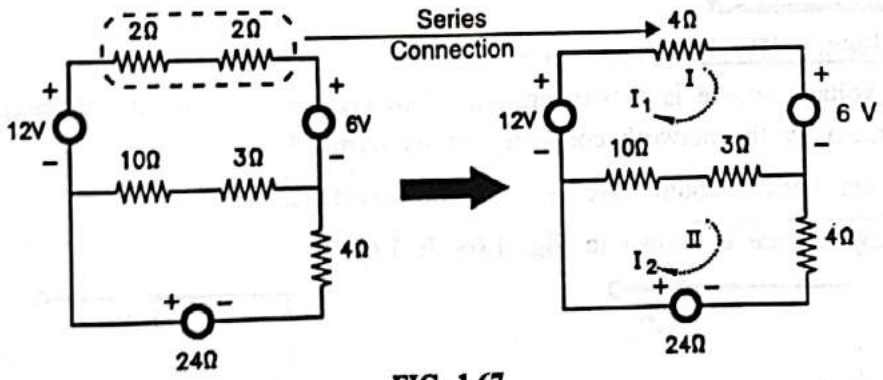


FIG. 1.67

***Solution :***

Applying *KVL* to loop I, we get

$$12 - 4\,I_1 - 6 - (10 + 3)\,(I_1 - I_2) = 0$$

$$17\,I_1 - 13\,I_2 = 6 \qquad \text{... (i)}$$

Scanned with CamScanner

Applying *KVL* to loop II, we get

$$24 - (10 + 3)(I_2 - I_1) - 4 I_2 = 0$$

$$-13 I_1 + 17 I_2 = 24$$

Multiply Equation (i) with 13 and Equation (ii) with 17, we get

$$221 I_1 - 169 I_2 = 78$$

$$-221 I_1 + 289 I_2 = 408$$

$$120 I_2 = 486$$

$$I_2 = \boxed{4.05 \text{ A}}$$

Substituting equation (iii) in equation (i), we get

$$17 I_1 - 13 \times 4.05 = 6$$

$$\therefore \quad I_1 = (6 + 52.65) / 17 = \boxed{3.45 \text{ A}}$$

Hence, current in 10 Ω resistance is

$$(I_2 - I_1) = 4.05 - 3.45$$

$$= \boxed{0.6 \text{ A}}$$

**Syllabus Topic : Voltage and Current Sources**

## 1.20 SOURCES OF ELECTRICAL ENERGY :

There are two types of energy sources.

1. Independent sources
2. Dependent sources

### 1. Independent Sources (Ideal source) :

There are two types of ideal sources.

(1) Ideal voltage source
(2) Ideal current source

#### (1) Ideal voltage source :

- An ideal voltage source is a two terminal elements whose terminal voltage is independent of the current drawn by the network connected to its terminals.
- Ideal voltage source should have zero internal resistance.
- Ideal voltage source is shown in Fig. 1.68 & 1.69.

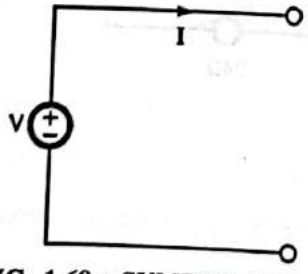


**FIG. 1.68 : SYMBOL FOR THE IDEAL VOLTAGE SOURCE**

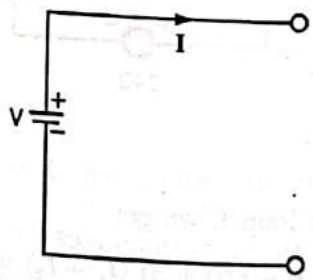


**FIG. 1.69 : SYMBOL FOR THE IDEAL VOLTAGE SOURCE**

Scanned with CamScanner

- V-I charateristics for an ideal voltage source is shown in Fig. 1.70.

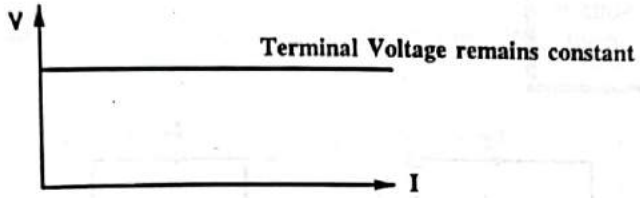


**FIG. 1.70 : V-I CHARACTERISTIC OF AN IDEAL VOLTAGE SOURCE**

**(2) Ideal Current Source :**

- An ideal current source is a two terminal elements whose terminal current is independent of the voltage drawn by the network conencted to its terminals.
- Ideal current source is shown in Fig. 1.71.

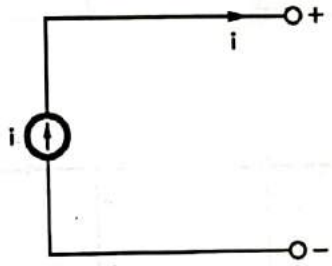


**FIG. 1.71 : SYMBOL FOR THE IDEAL CURRENT**

- I-V charactcristics for an ideal current source is shown in Fig. 1.72

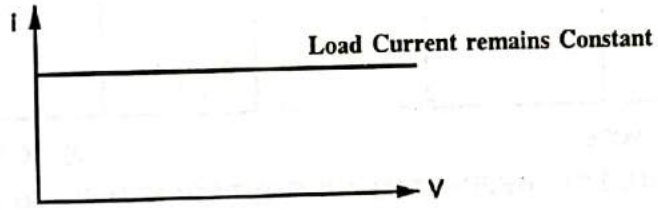


**FIG. 1.72 : I-V CHARACTERISTICS OF AN IDEAL CURRENT SOURCE**

**2. Dependent Sources :**

- Dependent source are those sources whose voltage or current is not fixed. But is dependent on the voltage or current existing at some other location in the circuit.
- It is represented by a dimond-shaped symbol.

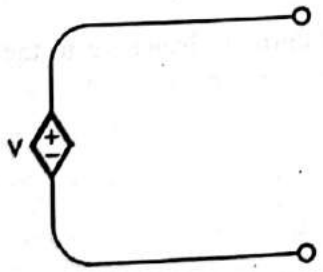


[DEPENDENT VOLTAGE SOURCE]

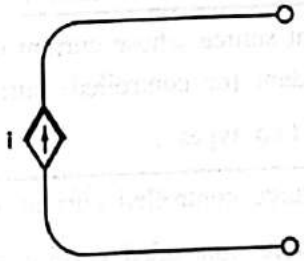


[DEPENDENT CURRENT SOURCE]

**FIG. 1.73 : DEPENDENT VOLTAGE & CURRENT SOURCES**

Scanned with CamScanner

- These sources are of two types

| |
|---|
| (1) Dependent voltage source |
| (2) Dependent current source |

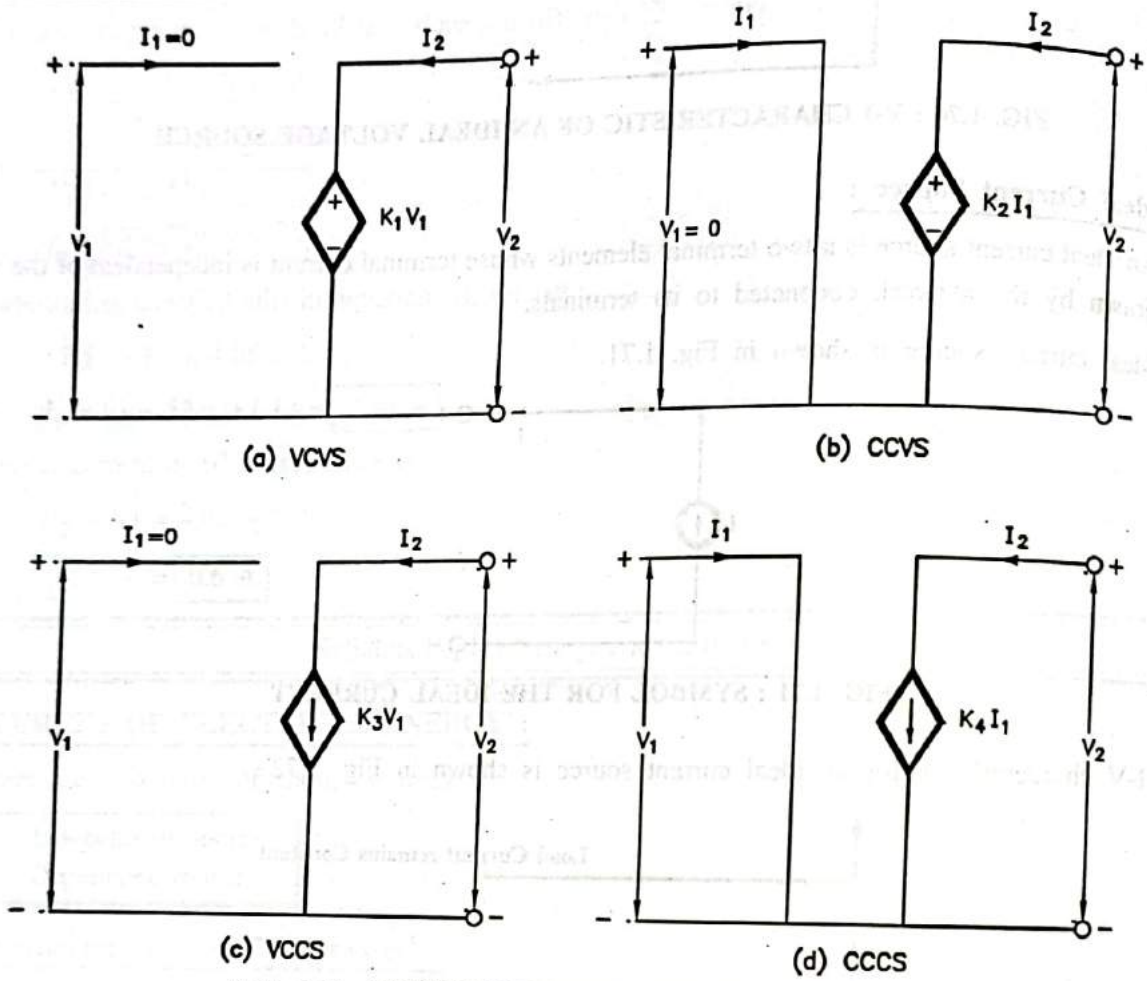


FIG. 1.74 : DEPENDENT OR CONTROLLED SOURCES

**(1) Dependent Voltage Source :**

- A voltage source is which depends on other voltage or current elsewhere in the circuit is called a dependent (controlled) voltage source.
- It is of two types : (a) Voltage controlled voltage sources. (VCVS) (b) Current controlled voltage source (CCVS) as shown in Fig. 1.74(a) and (b) respectively.

**(2) Dependent Current Source :**

- A current source whose current depends on some voltage or current elsewhere in the circuit is called a dependent (or controlled) current source.
- It is of two types :

| |
|---|
| (a) Voltage controlled current source (VCCS) |
| (b) Current controlled current source (CCCS) |

- These are shown as Fig. 1.74(c) and (d).

Scanned with CamScanner

## 1.21 MESH ANALYSIS :

**Definition :** "Mesh is define as a loop which is not contain any other loops within it."

**Example :**

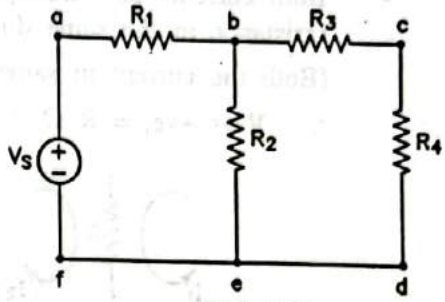


FIG. 1.75

- In this fig. abefa & bcdeb are meshes because they cannot be further divided into other closed path.
- But abcdefa can not be called mesh because it enclosed with two loops abefa & bcdeb.
- Mesh analysis is important techniques which are useful to find solution of network.
- If Network has large number of voltage sources, it is useful to use mesh analysis.

### 1.21.1 Mesh Analysis by Inspection Method :

- Let us solve the circuit shown in figure 1.76.
- We clearly identify three meshes and assume all the mesh currents to be in clockwise direction.
- Apply KVL to the above circuit.

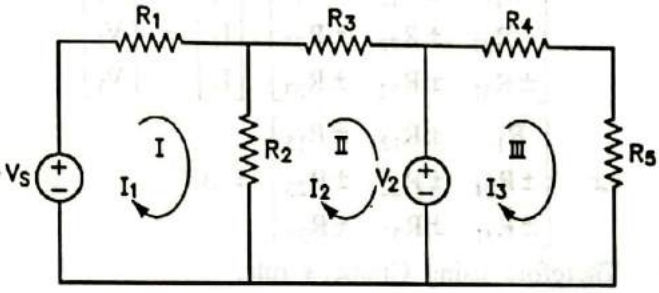


FIG. 1.76

**Mesh-1 :**

$$I_1R_1 + R_2(I_1 - I_2) = V_1$$

$$\therefore \quad I_1R_1 + R_2I_1 - I_2R_2 = V_1$$

$$\therefore \quad \boxed{(R_1 + R_2)\, I_1 - R_2I_2 = V_1} \quad \ldots (1)$$

**Mesh-2 :**

$$R_2(I_2 - I_1) + I_2R_3 = -V_2$$

$$\therefore \quad \boxed{-R_2I_1 + (R_2 + R_3)\, I_2 = -V_2} \quad \ldots (2)$$

**Mesh-3 :**

$$I_3R_4 + I_3R_5 = V_2$$

$$\therefore \quad \boxed{(R_4 + R_5)\, I_3 = V_2} \quad \ldots (3)$$

- One of the most important features of mesh analysis is that its equation can be directly written from the circuit. For all the three mesh circuits, mesh equations can be directly written as

$$R_{11}\, I_1 \pm R_{12}\, I_2 \pm R_{13}I_3 = \pm V_1 \quad \ldots (1.1)$$

$$\pm R_{21}I_1 + R_{22}I_2 \pm R_{23}I_3 = \pm V_2 \quad \ldots (1.2)$$

$$\pm R_{31}I_1 \pm R_{32}I_2 + R_{33}I_3 = \pm V_3 \quad \ldots (1.3)$$

where,

$R_{11}$ = Sum of resistances connected in mesh 1.

$R_{12} = R_{21}$ = Sum of the resistances common in mesh 1 & 2.

$R_{13} = R_{31}$ = Sum of the resistances common in mesh 1 & 3.

$R_{22}$ = Sum of the resistances connected in mesh–2.

$R_{23} = R_{32}$ = Sum of the resistances common in mesh 2 & 3.

$R_{33}$ = Sum of the resistances connected in mesh 3.

$i_1, i_2, i_3$ = Current in respective three meshes.

Scanned with CamScanner

**Sign :**

**+Ve Sign :**

- Both currents pass through the common resistance in the same direction.

  [Both the current in same direction (↓)]

  ∴ R is +ve. = R Ω

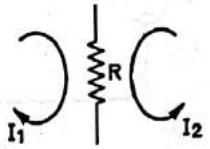


FIG. 1.77

**–Ve sign :**

- Both the currents pass through the common resistance in opposite direction.

  [Currents is in opposite derection]

  ∴ R is negative = –R Ω

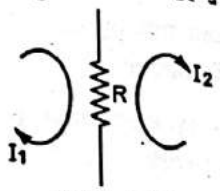


FIG. 1.78

$V_1$ = Algebric sum of voltages in mesh – I

$V_2$ = Algebric sum of voltages in mesh – II

$V_3$ = Algebric sum of voltages in mesh – III

- In matrix form, the above equation can be written as

$$\begin{bmatrix} R_{11} & \pm R_{12} & \pm R_{13} \\ \pm R_{21} & \pm R_{22} & \pm R_{23} \\ \pm R_{31} & \pm R_{32} & \pm R_{33} \end{bmatrix} \begin{bmatrix} I_1 \\ I_2 \\ I_3 \end{bmatrix} = \begin{bmatrix} V_1 \\ V_2 \\ V_3 \end{bmatrix}$$

Let $\begin{bmatrix} R_{11} & \pm R_{12} & \pm R_{13} \\ \pm R_{21} & \pm R_{22} & \pm R_{23} \\ \pm R_{31} & \pm R_{32} & \pm R_{33} \end{bmatrix} = \Delta R$

- Therefore using Cramer's rule,

$$I_1 = \frac{\Delta R_1}{\Delta R} = \frac{\begin{bmatrix} V_1 & \pm R_{12} & \pm R_{13} \\ V_2 & R_{22} & \pm R_{23} \\ V_3 & \pm R_{32} & R_{33} \end{bmatrix}}{\Delta R}$$

$$I_2 = \frac{\Delta R_2}{\Delta R} = \frac{\begin{bmatrix} R_{11} & V_1 & \pm R_{13} \\ \pm R_{21} & V_2 & \pm R_{23} \\ \pm R_{31} & V_3 & R_{33} \end{bmatrix}}{\Delta R}$$

$$I_3 = \frac{\Delta R_3}{\Delta R} = \frac{\begin{bmatrix} R_{11} & \pm R_{12} & V_1 \\ \pm R_{21} & R_{22} & V_2 \\ \pm R_{31} & \pm R_{32} & V_3 \end{bmatrix}}{\Delta R}$$

**Example-1.21 :**

**For the given network, of Fig. 1.79 write the mesh current equations and determine the**

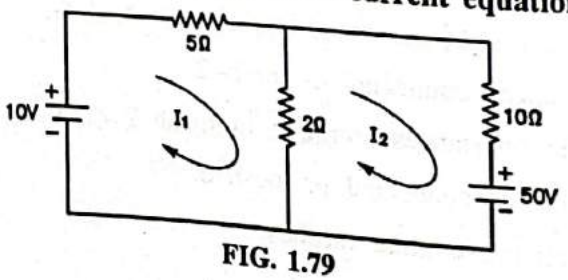


FIG. 1.79

Scanned with CamScanner

*Solution :*

Applying KVL to the above circuit,

1st loop equation,

$$10 - 5\,I_1 - 2\,(I_1 - I_2) = 0$$

2nd loop equation,

$$-10\,I_2 - 50 - 2\,(I_2 - I_1) = 0$$

Rearrange the above equations as,

$$10 = 7\,I_1 - 2\,I_2$$

$$-50 = -2\,I_1 + 12\,I_2$$

In matrix form,

$$\begin{bmatrix} 10 \\ -50 \end{bmatrix} = \begin{bmatrix} 7 & -2 \\ -2 & 12 \end{bmatrix} \begin{bmatrix} I_1 \\ I_2 \end{bmatrix}$$

Now,

$$\Delta R = \begin{vmatrix} 7 & -2 \\ -2 & 12 \end{vmatrix} = 80\ \Omega$$

$$\Delta R_1 = \begin{vmatrix} 10 & -2 \\ -50 & 12 \end{vmatrix} = 20\ \Omega$$

$$\Delta R_2 = \begin{vmatrix} 7 & 10 \\ -2 & -50 \end{vmatrix} = -\ 330\ \Omega$$

Using cramer's rule,

$$I_1 = \frac{\Delta R_1}{\Delta R} = \frac{20}{80} = \boxed{0.25\ \text{amp.}}$$

$$I_2 = \frac{\Delta R_2}{\Delta R} = \frac{-330}{80} = \boxed{-4.125\ \text{amp.}}$$

**Example-1.22 :**

**Determine the mesh currents $I_1$, $I_2$ and $i_3$ for network shown Fig. 1.80.** **GTU, Dec. 2016**

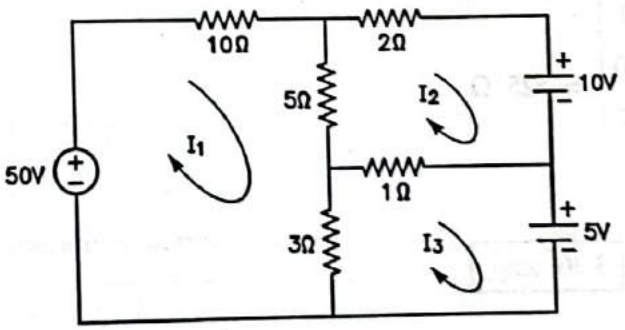


**FIG. 1.80**

*Solution :*

Applying KVL to the above circuit,

The mesh current equations are,

Scanned with CamScanner

KVL for loop-1,

$$50 - 10\,I_1 - 5\,(I_1 - I_2) - 3\,(I_1 - I_3) = 0$$

$$\therefore \quad 50 = 18\,I_1 - 5\,I_2 - 3\,I_3 \qquad \cdots (1)$$

KVL for loop-2,

$$-2\,I_2 - 10 - 1\,(I_2 - I_3) - 5\,(I_2 - I_1) = 0$$

$$\therefore \quad -10 = -5\,I_1 + 8\,I_2 - I_3 \qquad \cdots (2)$$

KVL for loop-3,

$$-5 - 3\,(I_3 - I_1) - 1\,(I_3 - I_2) = 0$$

$$\therefore \quad -5 = -3\,I_1 - I_2 + 4\,I_3 \qquad \cdots (3)$$

From equation (1), (2) and (3)

$$\begin{bmatrix} 50 \\ -10 \\ -5 \end{bmatrix} = \begin{bmatrix} 18 & -5 & -3 \\ -5 & 8 & -1 \\ -3 & -1 & 4 \end{bmatrix} \begin{bmatrix} I_1 \\ I_2 \\ I_3 \end{bmatrix}$$

Now,

$$\Delta R = \begin{vmatrix} 18 & -5 & -3 \\ -5 & 8 & -1 \\ -3 & -1 & 4 \end{vmatrix} = 356\ \Omega$$

$$\Delta R_1 = \begin{vmatrix} 50 & -5 & -3 \\ -10 & 8 & -1 \\ -5 & -1 & 4 \end{vmatrix} = 1175\ \Omega$$

$$\Delta R_2 = \begin{vmatrix} 18 & 50 & -3 \\ -5 & -10 & -1 \\ -3 & -5 & 4 \end{vmatrix} = 355\ \Omega$$

$$\Delta R_3 = \begin{vmatrix} 18 & -5 & 50 \\ -5 & 8 & -10 \\ -3 & -1 & -5 \end{vmatrix} = 525\ \Omega$$

Using cramer's rule,

$$I_1 = \frac{\Delta R_1}{\Delta R} = \frac{1175}{356} = \boxed{3.30 \text{ amp.}}$$

$$I_2 = \frac{\Delta R_2}{\Delta R} = \frac{355}{356} = \boxed{0.99 \text{ amp.}}$$

$$I_3 = \frac{\Delta R_3}{\Delta R} = \frac{525}{356} = \boxed{1.47 \text{ amp.}}$$

Scanned with CamScanner

**Example-1.23 :**

**For the given network, of Fig. 1.81 determine the mesh current $I_1$, $I_2$ and $I_3$.**

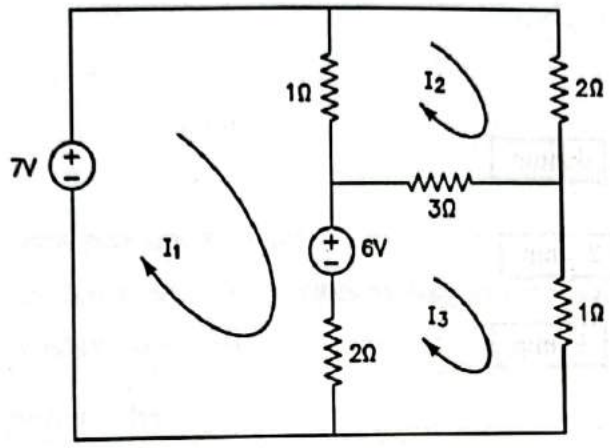


**FIG. 1.81**

***Solution :***

Writing KVL equations for the above circuit, the mesh current equations are.

KVL for loop–1,

$$7 - 1\,(I_1 - I_2) - 6 - 2\,(I_1 - I_3) = 0$$

$$\therefore \quad 1 = 3\,I_1 - I_2 - 2I_3 \qquad \text{... (1)}$$

KVL for loop–2,

$$-2\,I_2 - 3\,(I_2 - I_3) - 1\,(I_2 - I_1) = 0$$

$$\therefore \quad 0 = -\,I_1 + 6\,I_2 - 3\,I_3 \qquad \text{... (2)}$$

KVL for loop–3,

$$-\,I_3 - 2\,(I_3 - I_1) + 6 - 3\,(I_3 - I_2) = 0$$

$$\therefore \quad 6 = -\,2\,I_1 - 3\,I_2 + 6\,I_3 \qquad \text{... (3)}$$

From equation (1), (2) and (3),

$$\begin{bmatrix} 1 \\ 0 \\ 6 \end{bmatrix} \begin{bmatrix} 3 & -1 & -2 \\ -1 & 6 & -3 \\ -2 & -3 & 6 \end{bmatrix} \begin{bmatrix} I_1 \\ I_2 \\ I_3 \end{bmatrix}$$

Now,

$$\Delta R = \begin{vmatrix} 3 & -1 & -2 \\ -1 & 6 & -3 \\ -2 & -3 & 6 \end{vmatrix} = 39\ \Omega$$

$$\Delta R_1 = \begin{vmatrix} 1 & -1 & -2 \\ 0 & 6 & -3 \\ 6 & -3 & 6 \end{vmatrix} = 117\ \Omega$$

$$\Delta R_2 = \begin{vmatrix} 3 & 1 & -2 \\ -1 & 0 & -3 \\ -2 & 6 & 6 \end{vmatrix} = 78\ \Omega$$

Scanned with CamScanner

$$\Delta R_3 = \begin{vmatrix} 3 & -1 & 1 \\ -1 & 6 & 0 \\ -2 & -3 & 6 \end{vmatrix} = 117\ \Omega$$

Using cramer's rule,

$$I_1 = \frac{\Delta R_1}{\Delta R} = \frac{117}{39} = \boxed{3 \text{ amp.}}$$

$$I_2 = \frac{\Delta R_2}{\Delta R} = \frac{78}{39} = \boxed{2 \text{ amp.}}$$

$$I_3 = \frac{\Delta R_3}{\Delta R} = \frac{117}{39} = \boxed{3 \text{ amp.}}$$

**Example-1.24 :**

**Find current flowing through 5Ω resistor of the following figure using mesh analysis. Refer Fig. 1.82.**

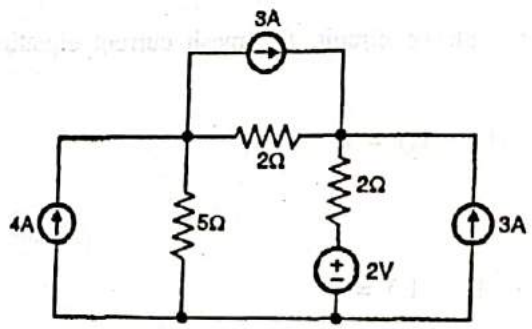


FIG. 1.82

**Solution :**

**Step-1 : decide the loops and mark the brnach currents :**

Refer Fig. 1.83.

**Step-2 : Find $I_1$ :**

Apply kVL to loop-1 in Fig. 1.83 to write

$$5I_1 = (4 - I_1 - 3)\ 2 + (7 - I_1) + 2$$

$$\therefore\ 5I_1 = 2 - 2I_1 + 14 - 2I_1 + 2$$

$$\therefore\ 9I_1 = 18$$

$$\therefore\ I_1 = 18/9 = 2 \text{ Amp.}$$ ... Ans.

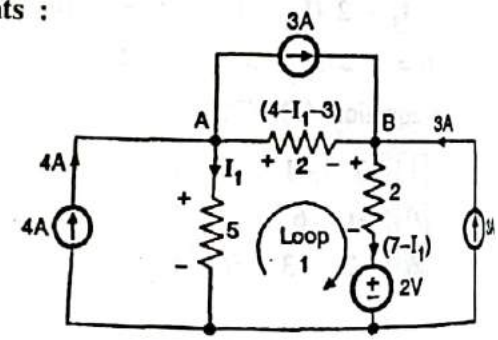


FIG. 1.83

## 1.22 NODE ANALYSIS :

- Node analysis is a more powerful method than mesh analysis.
- This method is based on the application of KCL on different nodes of the circuit.
- In this method, instead of assuming the mesh current, we assume node voltages with respect to some reference node and write KCL equations for all the nodes.

**Definition of Node :**

- The point at which two or more elements are connected together is called node.
- In this Fig. 1, 2, & 3 are node.

Scanned with CamScanner

**Principal Node : (Junction)**

- If three or more elements are common to a node, that node is called principel node.
- Each node is defined by a number.
- In this fig. node 1 & 2 are principle node.

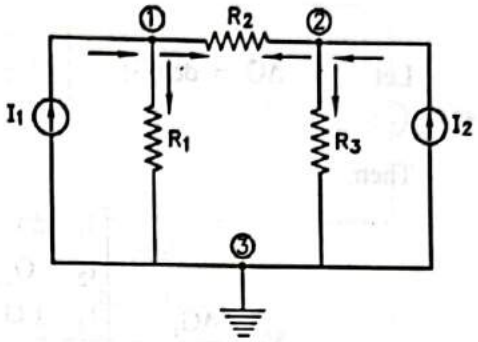


FIG. 1.84

**Refrence Node :**

- The node, we assume to zero potential is called refrence node.
- The negative terminal of an active element is select as the refrence node.
- The circuit shown, node 3 is refrence node.

**1.22.1 Node Analysis by Inspection Method :**

- In this fig. node 1 & 2 are actual nodes (principal) nodes & node 3 is refrence node.
- Apply Kirchhoff's current law at node -1.

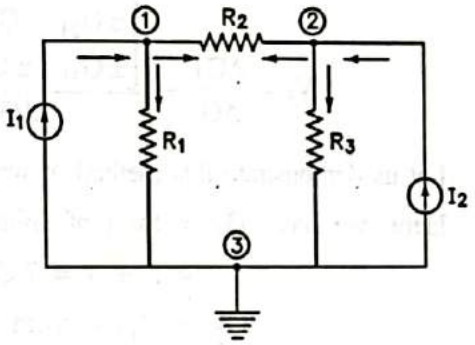


FIG. 1.85

**Node-1 :**

$$\frac{V_1}{R_1} + \frac{V_1 - V_2}{R_2} = I_1$$

$$\therefore \quad \left[\frac{1}{R_1} + \frac{1}{R_2}\right] V_1 - \frac{1}{R_2} V_2 = I_1$$

**Node-2 :**

$$\frac{V_2}{R_3} + \frac{V_2 - V_1}{R_2} = I_2$$

$$-\frac{1}{R_2} V_2 + \left[\frac{1}{R_2} + \frac{1}{R_3}\right] V_2 = I_2$$

In matrix Form :

$$\therefore \quad \begin{bmatrix} \frac{1}{R_1} + \frac{1}{R_2} & -\frac{1}{R_2} \\ -\frac{1}{R_2} & \frac{1}{R_1} + \frac{1}{R_2} \end{bmatrix} \begin{bmatrix} V_1 \\ V_2 \end{bmatrix} \begin{bmatrix} I_1 \\ I_2 \end{bmatrix}$$

In general eqn.

$$G_{11}V_1 \pm G_{12}V_2 \pm G_{13}V_3 = \pm I_1 \quad \text{(For node 1)}$$

$$\pm G_{21}V_1 + G_{22}V_2 \pm G_{23}V_3 = \pm I_2 \quad \text{(For node 2)}$$

$$\pm G_{31}V_1 \pm G_{32}V_2 + G_{33}V_3 = \pm I_3 \quad \text{(For node 3)}$$

- In matrix form

$$\begin{bmatrix} G_{11} & \pm G_{12} & \pm G_{13} \\ \pm G_{21} & G_{22} & \pm G_{23} \\ \pm G_{31} & \pm G_{32} & G_{33} \end{bmatrix} \begin{bmatrix} V_1 \\ V_2 \\ V_3 \end{bmatrix} = \begin{bmatrix} I_1 \\ I_2 \\ I_3 \end{bmatrix}$$

The above equation can be solved by Cramer's rule.

Scanned with CamScanner

Let $\Delta G = \text{del}(G) = \begin{bmatrix} G_{11} & \pm G_{12} & \pm G_{13} \\ \pm G_{21} & G_{22} & \pm G_{23} \\ \pm G_{31} & \pm G_{32} & G_{33} \end{bmatrix}$

Then,

$$V_1 = \frac{\Delta G_1}{\Delta G} = \frac{\begin{bmatrix} I_1 & \pm G_{12} & \pm G_{13} \\ I_2 & G_{22} & \pm G_{23} \\ I_3 & \pm G_{32} & G_{33} \end{bmatrix}}{\Delta G}$$

$$V_2 = \frac{\Delta G_2}{\Delta G} = \frac{\begin{bmatrix} G_{11} & I_1 & \pm G_{13} \\ \pm G_{21} & I_2 & \pm G_{23} \\ \pm G_{31} & I_3 & G_{33} \end{bmatrix}}{\Delta G}$$

$$V_3 = \frac{\Delta G_3}{\Delta G} = \frac{\begin{bmatrix} G_{11} & \pm G_{12} & I_1 \\ \pm G_{21} & G_{22} & I_2 \\ \pm G_{31} & \pm G_{32} & I_3 \end{bmatrix}}{\Delta G}$$

- Let us demonstrate this method of writing node equations by taking an example of circuit shown in Fig. 1.86

Here, we have $G_{11}$ = Sum of conductances connected to node 1

$= 3 + 4 = 7\,\mho$

$G_{21} = G_{12}$ = Sum of conductances connected between node 1 and node 2

$= 3\,\mho$

$G_{23} = 2\,\mho = G_{32}$

$G_{13} = G_{31} = 4\,\mho$

$G_{22} = 3 + 1 + 2 = 6$

$G_{33} = 2 + 5 + 4 = 11$

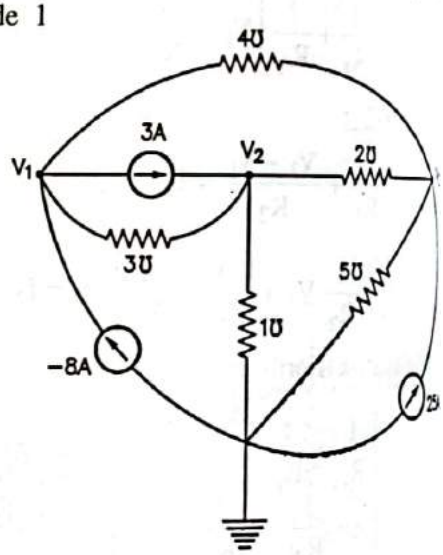

FIG. 1.86

Current entering at node 1, $I_1 = -8 - 3 = \boxed{-11\text{ A}}$

Current entering at node 2, $I_2 = \boxed{3\text{ A}}$

and current entering at node 3, $I_3 = \boxed{25\text{ A}}$

**Example-1.25 :**

**Use nodal analysis to find the voltage across 5Ω resistor, for the network of Fig. 1.87.**

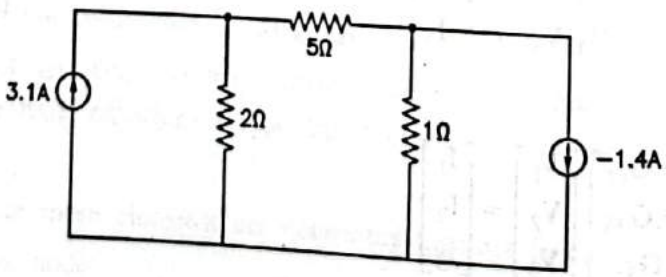

FIG. 1.87

Scanned with CamScanner

*Solution :*

**Step-1 :** Identify the no. of nodes in the given circuit.

There are 3 nodes named A, B and C. Let us consider node C as reference node.

**Step-2 :** Apply KCL at each node in the circuit except reference node.

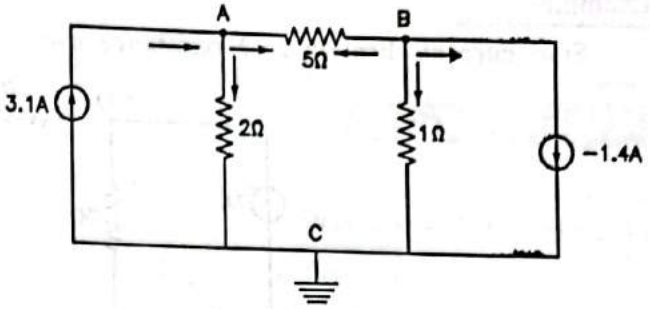


FIG. 1.88

Let us assume potential at node A is $V_A$ and potential at node B is $V_B$ as shown.

**Applying KCL at node-A,**

$$3.1 = \frac{V_A}{2} + \frac{V_A - V_B}{5}$$

$$\therefore \quad 0.7\ V_A - 0.2\ V_B = 3.1 \qquad \text{... (1)}$$

**Applying KCL at node-B,**

$$\frac{V_A - V_B}{5} = \frac{V_B}{1} + (-1.4)$$

$$\therefore \quad -0.2\ V_A + 1.2\ V_B = 1.4 \qquad \text{... (2)}$$

From equations (1) and (2),

$$\begin{bmatrix} 0.7 & -0.2 \\ -0.2 & 1.2 \end{bmatrix} \begin{bmatrix} V_A \\ V_B \end{bmatrix} = \begin{bmatrix} 3.1 \\ 1.4 \end{bmatrix}$$

Let, $\Delta G = \begin{vmatrix} 0.7 & -0.2 \\ -0.2 & 1.2 \end{vmatrix} = 0.8$

$$\Delta G_1 = \begin{vmatrix} 3.1 & -0.2 \\ 1.4 & 1.2 \end{vmatrix} = 4$$

$$\Delta G_2 \begin{vmatrix} 0.7 & 3.1 \\ -0.2 & 1.4 \end{vmatrix} = 1.6$$

Using cramer's rule,

$$\therefore \quad V_A = \frac{\Delta G_1}{\Delta G} = \frac{4}{0.8} = 5 \text{ volts}$$

$$\text{and } V_B = \frac{\Delta G_2}{\Delta G} = \frac{1.6}{0.8} = 2 \text{ volts}$$

Hence, the voltage across 5Ω resistor is

$$V_5 = V_A - V_B$$

$$= \boxed{3 \text{ volt}}$$



Scanned with CamScanner

**Example-1.26 :**

**Find current through 2 Ω resistance using nodal analysis.**

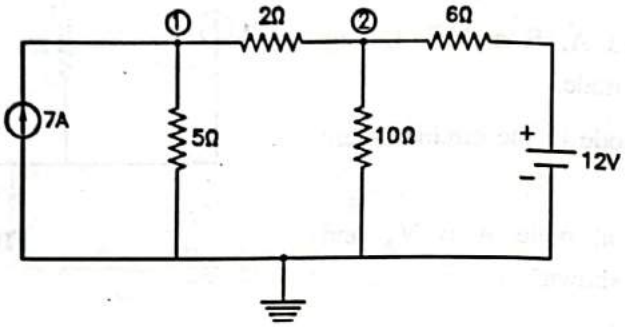


FIG. 1.89

***Solution :***

Convert the voltage source into current source and write conductance value in place of resistance value

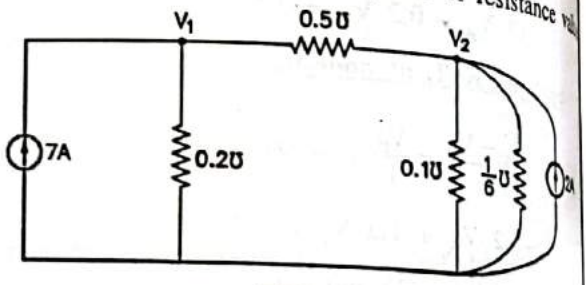


FIG. 1.90

$$G_{11} = 0.2 + 0.5$$
$$= 0.7\ ℧$$

$$G_{22} = 0.5 + 0.1 + \frac{1}{6}$$
$$= 0.766\ ℧$$

$$G_{12} = G_{21} = -0.5\ ℧$$

∴ Nodal equations are

$$0.7\ V_1 - 0.5\ V_2 = 7$$
$$-0.5\ V_1 + 0.766\ V_2 = 2$$

Now, multiply equation (i) by 5 and equation (ii) by 7 and add

$$3.5\ V_1 - 2.5\ V_2 = 35$$
$$-3.5\ V_1 + 5.362\ V_2 = 14$$
$$2.862\ V_2 = 21$$
$$V_2 = 7.337V$$

Substitute $V_2$ in equation (i), we get

$$0.7\ V_1 - 0.5 \times 7.337 = 7$$

$$\boxed{V_1 = 15.24\ V}$$

∴ Current in 2 ohm (0.5 mho) resistor is

$$I = \frac{V_1 - V_2}{R}$$
$$= (V_1 - V_2)\ G$$
$$= (15.24 - 7.337) \times 0.5$$

$$\boxed{I = 3.9525\ A}$$

Scanned with CamScanner

**Syllabus Topic :** Superposition Theorem

## 1.23 SUPERPOSITION THEOREM :

**GTU, December-2020**

**GTU Questions**

**1.** State the superposition theorem with suitable example. **[December-2020, 4-Marks]**

- Superposition theorem is used to solve electrical circuit which have more than one energy source.
- This theorem is applicable to only linear circuit.
- Therefore, it is not applicable to circuit which have non-linear elements such as diodes, transistors etc.

**Statement :**

The statement of superposition theorem is as follows :

*"In a linear electrical network having more than one independent energy source, the response in any branch (i.e., voltage across any branch or current through any branch) is equal to the algebraic sum of all the responses due to each individual source acting alone with all other sources reduced to zero."*

- Reducing a voltage source to zero means replacing it by a short circuit. Reducing current source to zero means replacing it by an open circuit
- It is important to note that superposition theorem is applicable only for independent energy sources. Therefore, while applying superposition theorem, dependent sources are not considered alone.

**Explanation : To explain the superposition theorem let us find the current 9 Ω resistor as shown in the circuit.**

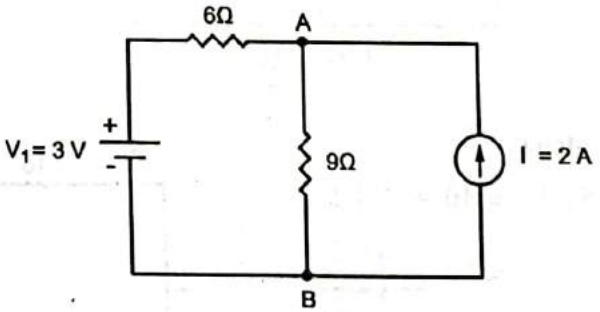


**FIG. 1.91**

***Solution :***

**Step-1 : Consider 3 V source alone.**

Let us first consider voltage $V_1$ only and reduce the current source to zero (open circuit)

Therefore,

$$I'_9 = \frac{3}{6+9} = \frac{3}{15} = \boxed{0.2A} \quad \text{(from (A) to (B))}$$

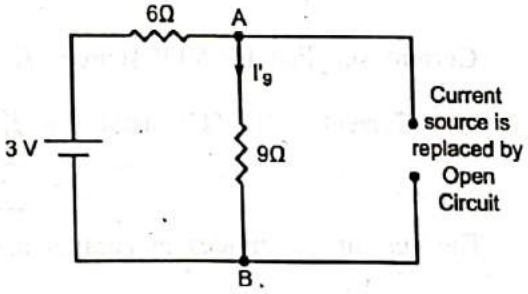


**FIG. 1.92 : CIRCUIT CONSIDERING 3 V SOURCE**

**Step-2 : Consider 2 A source alone.**

Let us now consider current source 2 A alone, reducing voltage source, $V_1$ to zero (replacing it by short circuit).

Therefore,

$$I''_9 = 2 \times \frac{6}{6+9}$$

$$I''_9 = \boxed{0.8 \text{ Amp.}} \quad \text{(from (A) to (B))}$$

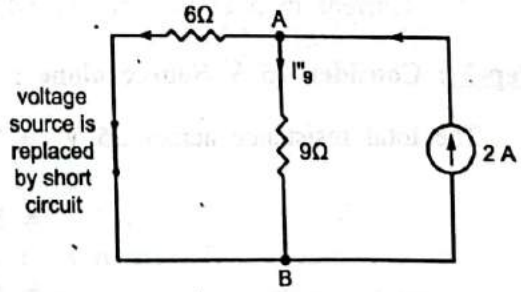


**FIG. 1.93 : CIRCUIT 2 A SOURCE**

Scanned with CamScanner

**Step-3 : Calculation of $I_9$ :**

Therefore, the total current in 9 Ω resistor when both the sources are acting

$I_9$ = algebraic sum of the two current

$= I_9' + I_9'' = 0.2 + 0.8$

$= \boxed{1 \text{ Amp.}}$

**Limitations of superposition Theorem :**

1. It is not applicable to circuits consisting of non linear elements like semiconductor devices, gas tubes etc.
2. It is not applicable to the circuits consisting of only dependent sources.
3. It is not useful to the circuits consisting of less than two independent sources.
4. It is not useful for power calculation, since the power is proportional to square of current or voltage (non-linear).

**Example-1.27 :**

**Determine the current in each resistor of Fig. 1.78 using the superposition theorem.**

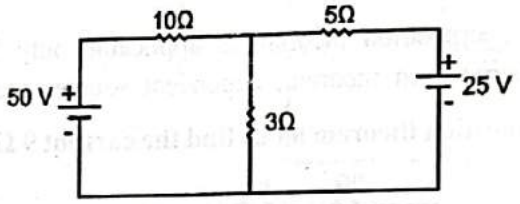


FIG. 1.94

***Solution :***

**Step-1 : Consider 50 V source alone**

The total resistance across 50 V $= 10 + 3 \parallel 5$

$= 10 + \dfrac{3 \times 5}{3+5}$

$= 11.9\ \Omega$

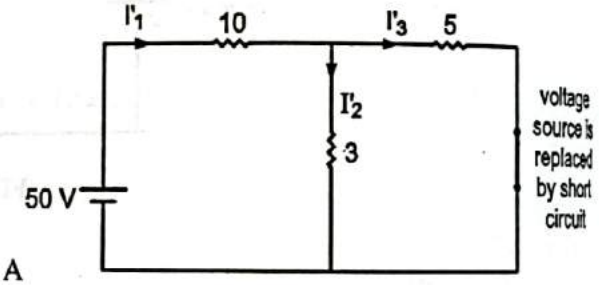


FIG. 1.95 : CIRCUIT CONSIDERING 50 V SOURCE

Current supplied by 50 V source, $I_1' = \dfrac{50}{11.9} = 4.2$ A

∴ Current in 10 Ω resistor $= I_1'$

$= \boxed{4.2 \text{ A}}$

The current $I_1'$ divides in parallel paths formed by resistors 3 Ω and 5 Ω

∴ Current in 3 Ω resistor, $I_2' = 4.2 \times \dfrac{5}{5+3} = \boxed{2.63 \text{ A}}$

∴ Current in 5 Ω resistor, $I_3' = 4.2 \times \dfrac{3}{3+5} = \boxed{1.58 \text{ A}}$

**Step-2 : Consider 25 V Source alone :**

The total resistance across 25 V $= 5 + 3 \parallel 10$

$= 5 + \dfrac{3 \times 10}{3+10}$

$= 7.31\ \Omega$

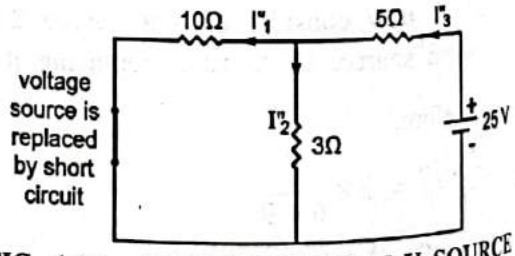


FIG. 1.96 : CIRCUIT WITH 25 V SOURCE

Scanned with CamScanner

Current supplied by battery = Current through 5 Ω resistor

$$I_3'' = \frac{25}{7.31} = \boxed{3.42\ \text{A}}$$

Current in 3 Ω resistor,

$$I_2'' = 3.42 \times \frac{10}{10+3} = \boxed{2.63\ \text{A}}$$

Current in 10 Ω resistor,

$$I_1'' = 3.42 \times \frac{10}{10+3} = \boxed{0.78\ \text{A}}$$

**Step-3 : Calculate the total current $I_1$, $I_2$ and $I_3$.**

According to superposition theorem

Current in 10 Ω resistor, $I_1 = I_1' - I_1'' = 4.2 - 0.78 = \boxed{3.42\ \text{A}}$

Current in 3 Ω resistor, $I_2 = I_2' + I_2'' = 2.63 + 2.63 = \boxed{5.26\ \text{A}}$

Current in 5 Ω resistor, $I_3 = I_3' - I_3'' = 3.42 - 1.58 = \boxed{1.84\ \text{A}}$

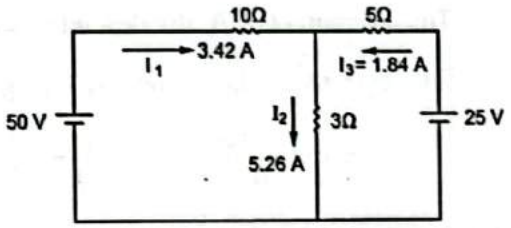


**FIG. 1.97 : CIRCUIT WITH DIRECTION OF CURRENTS**

Hence with both sources in operation, the values and direction of the currents are shown in Fig. 1.97.

**Example-1.28 :**

**Using Superposition theorem, calculate the current $I_{AB}$ in the given circuit of Fig. 1.98.**

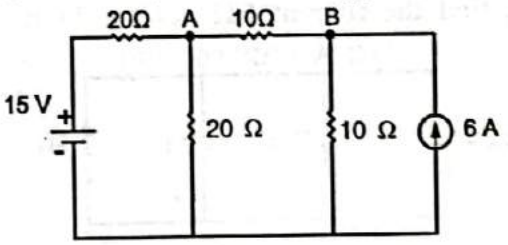


**FIG. 1.98**

***Solution :***

**Step-1 : Consider 15 V source alone.**

- The network of Fig. 1.98 is reduced to that shown in Fig. 1.99.

The resistance across 15 V source = 20 + 20 ∥ (10 + 10)

$$= 20 + 20 \parallel 20$$

$$= 20 + \frac{20 \times 20}{20+20}$$

$$= 30\ \Omega$$

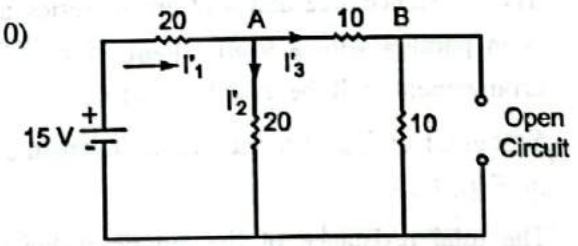


**FIG. 1.99 : CIRCUIT WITH 15 V SOURCE**

Battery current, $I_1' = \frac{15}{30} = 0.5\ \text{A}$.

The current $I_1'$ divides into two parallel paths at A.

The current in branch AB, $I_3' = 0.5 \times \frac{20}{20+10+10}$

$$= 0.5 \times \frac{20}{40} = \boxed{0.25\ \text{A}}\ \text{(From A to B)}$$

Scanned with CamScanner

**Step-2 : Consider 6 A source alone.**

- So 15 V source is replace by short circuit. Hence the circuit will be reduced to that shown in Fig. 1.100.

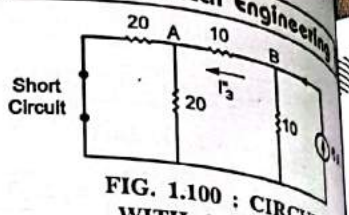


FIG. 1.100 : CIRCUIT WITH 6 A SOURCE

Replacing the two 20 Ω resistors connected in parallel by its equivalent value given by

$$= \frac{20 \times 20}{20 + 20}$$

$$= 10\ \Omega$$

Hence the circuit will be as shown in Fig. 1.101.

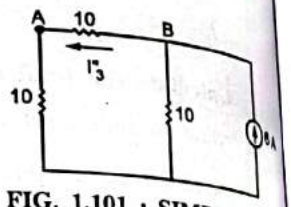


FIG. 1.101 : SIMPLIFIED CIRCUIT OF FIGURE 1.100

The current of 6 A divides into two parallel paths at B.

The current in the branch AB is given by

$$I''_3 = 6 \times \frac{10}{10 + 10} = 6 \times \frac{10}{30} = \boxed{2\ \text{A}} \qquad \text{(from B to A)}$$

**Step-3 : Calculate $I_{AB}$ :**

Hence the current in the branch AB when both sources are acting in the network is given by

$$I_{AB} = I''_3 - I'_3 = 2 - 0.25 = \boxed{1.75\ \text{A}} \qquad \text{(from B to A).}$$

**Example-1.29 :**

**Using Superposition theorem, find the current 6 Ω resistor in the given circuit of Fig. 1.102.**

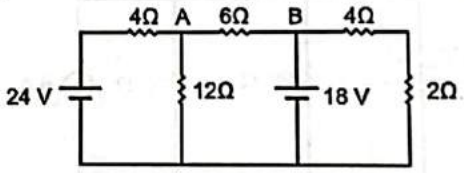


FIG. 1.102

*Solution :*

**Step-1 : Consider 24 V source alone.**

Replace 18 V source by short circuit as shown in Fig. 1.103.

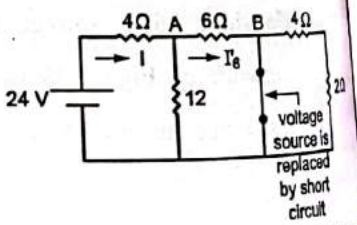


FIG. 1.103 : CIRCUIT WITH 18 V SOURCE SHORTED

The resistance 2 Ω and 4 Ω are in series and this series combination is in parallel with a short circuit. Hence the equivalent value of this arrangement will be equal to zero (short circuit).

So circuit of Fig. 1.87 can be redrawn in a simplified form as shown in Fig. 1.88.

The total resistance of the circuit of Fig. 1.104

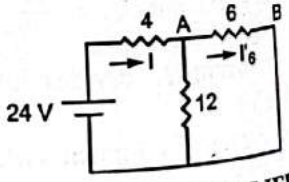


FIG. 1.104 : SIMPLIFIED CIRCUIT OF FIG. 1.103

$$R_1 = 4 + 6 \parallel 12$$

$$= 4 + \frac{6 \times 12}{6 + 12}$$

$$= 8\ \Omega$$

$\therefore$ Battery Current, $I = \frac{24}{8} = 3$ A

Scanned with CamScanner

This current divides in two parallel path at A. The current in 6 Ω resistor is given by

$$I_6' = 3 \times \frac{12}{12+6} = \boxed{2\text{ A}} \quad \text{(from A to B)}$$

**Step-2 : Now consider 18 V source alone.**

The corresponding circuit is given in Fig. 1.105.

The resistance 4 Ω and 12 Ω are in parallel.

The equivalent value is given by $= \frac{4 \times 12}{4+12} = 3\ \Omega$

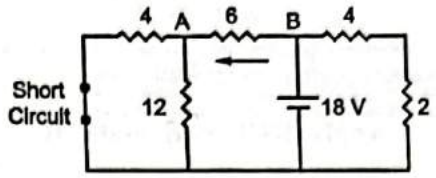


FIG. 1.105 : CIRCUIT WITH 18 V SOURCE

This resistance is in series with 6 Ω resistance. The network of Fig. 1.105 reduces to that shown in Fig. 1.106.

Total resistance $= 9 \parallel 6 = \frac{9 \times 6}{9+6} = 3.6\ \Omega$

Battery current $= \frac{18}{3.6} = 5\text{A}$

The current in 6 Ω resistor is $I_6''$

$$I_6'' = 5 \times \frac{6}{6+9} = \boxed{2\text{ A}} \quad \text{(from B to A)}$$

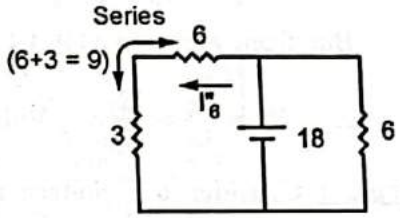


FIG. 1.106 : SIMPLIFIED CIRCUIT OF FIG. 1.105

**Step-3 : Calculation of $I_6$ :**

The total current in 6 Ω resistor when both the sources are acting simultaneously.

$$I_6 = I_6' - I_6'' = 2 - 2 = \boxed{0\text{ A}}$$

**Example-1.30 :**

**Determine the voltage across the 20 ohm resistor in the circuit shown in Fig. 1.107(a) with the application of superposition theorem.**

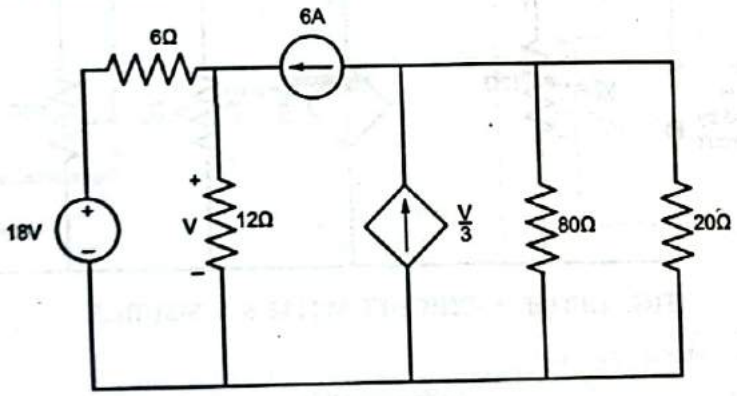


FIG. 1.107(a)

***Solution :***

**Step-1 : Consider 18 V Source along**

Apply KVL for Loop-1, we get

$$6I_1' + 12I_1' = 18$$

$$\therefore \quad (6+12)\, I_1' = 18$$

$$\therefore \quad I_1' = 1\text{ Amp}$$

But $I_1' = \frac{V_A'}{12}$

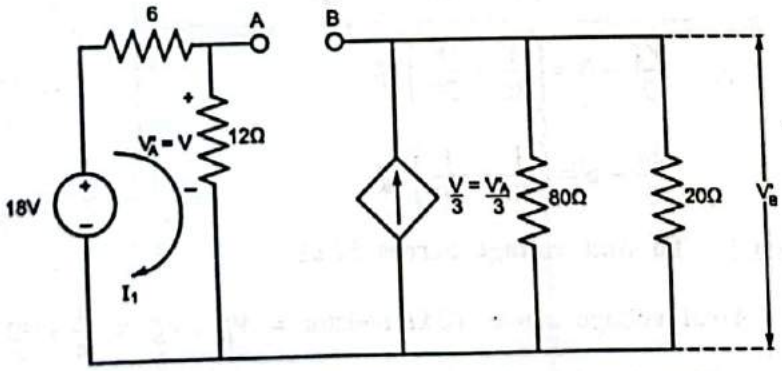


FIG. 1.107(b) : CIRCUIT WITH 18 V SOURCE

Scanned with CamScanner

$\therefore \quad V'_A = 12 \times I'_1$

$= 12 \times 1$

$\boxed{V'_A = 12 \text{ Volt}}$ ... (1)

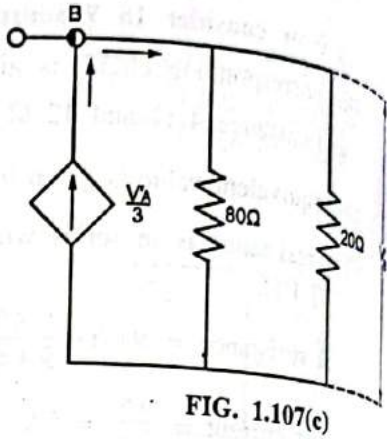


FIG. 1.107(c)

**Apply KCL and node, B**

$$\frac{V'_A}{3} = V'_B\left(\frac{1}{80}+\frac{1}{20}\right)$$

$$\therefore \quad V'_B = \frac{V'_A}{48}$$

But from equation (1), $V'_A = 12$ Volt

$$\therefore \quad V'_B = \frac{V'_A}{48} = \frac{12}{48} = \frac{1}{4} \text{ Volt} \quad \text{... (2)}$$

**Step-2 : Consider 6 A Source along**

**Apply KCL at node, A**

$$\left(\frac{1}{6}+\frac{1}{12}\right)V''_A = 6$$

$$\therefore \quad \boxed{V''_A = 24\ V}$$

**Apply KCL at node, B**

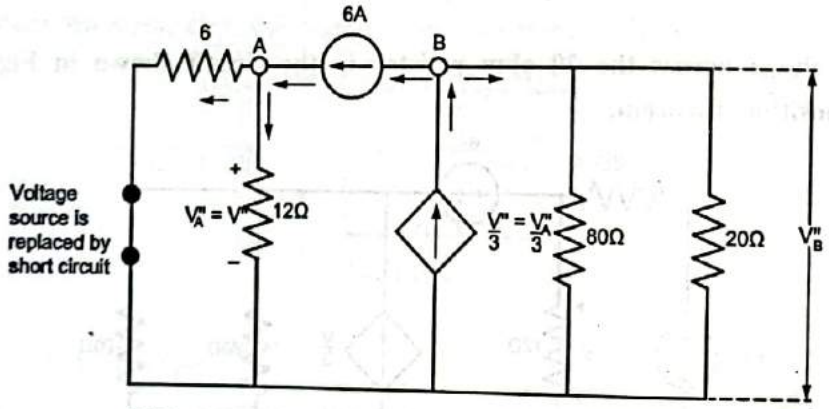


FIG. 1.107(d) : CIRCUIT WITH 6 A SOURCE

$$\frac{V''_A}{3} = 6 + \left(\frac{1}{80}+\frac{1}{20}\right)V''_B$$

$$\therefore \quad \frac{V''_A}{3} - 6 = \left(\frac{1}{80}+\frac{1}{20}\right)V''_B$$

$$\frac{24}{3} - 6 = \left(\frac{1}{80}+\frac{1}{20}\right)V''_B$$

$$\therefore \quad 2 = \left(\frac{1}{80}+\frac{1}{20}\right)V''_B$$

$$\therefore \quad \boxed{V''_B = 32 \text{ Volt}}$$

**Step-3 : To find voltage across 12 Ω.**

Total voltage across 12 Ω resistor $= V'_B + V''_B = \frac{1}{4} + 32 = \boxed{32.25 \text{ Volt}}$

Scanned with CamScanner

Syllabus Topic : Thevenin's Theorem

## 1.24 THEVENIN'S THEOREM :

**GTU, January-2019, 2020**

**GTU Questions**

1. Explain Thevenin's theorem. Take suitable example and explain the steps to apply Thevenin's theorem for a resistive circuit with a constant DC voltage source. **[January-2019, 2020, 7-Marks]**

**Statement :**

- *Thevenin's theorem states that any network having a number of energy sources and resistances when viewed form open its output terminal A and B and can be replaced by simple equivalent network consisting of a single equivalent voltage source ($V_{Th}$) in series with a single equivalent resistance ($R_{Th}$).*

where

$V_{Th}$ = Thevenin's equivalent voltage source
= Open circuit voltage across AB terminals

$R_{Th}$ = Thevenin's equivalent resistance.
= Equivalent resistance across AB terminals when all the sources set to zero.

**LEON CHARLES THEVENIN (1857- 1926)**

**LEON CHARLES THEVENIN (1857- 1926) :** He was a French telegraph engineer who extended Ohm's law to the analysis of complex electrical circuits. He increasingly interested in the problems of measurement in electrical circuits. In 1883 he developed his famous theorem, Thevenin's theorem which made it possible to calculate currents in more complex electrical circuits and allowing people to reduce complex circuits into simpler circuits called Thevenin's equivalent circuits.

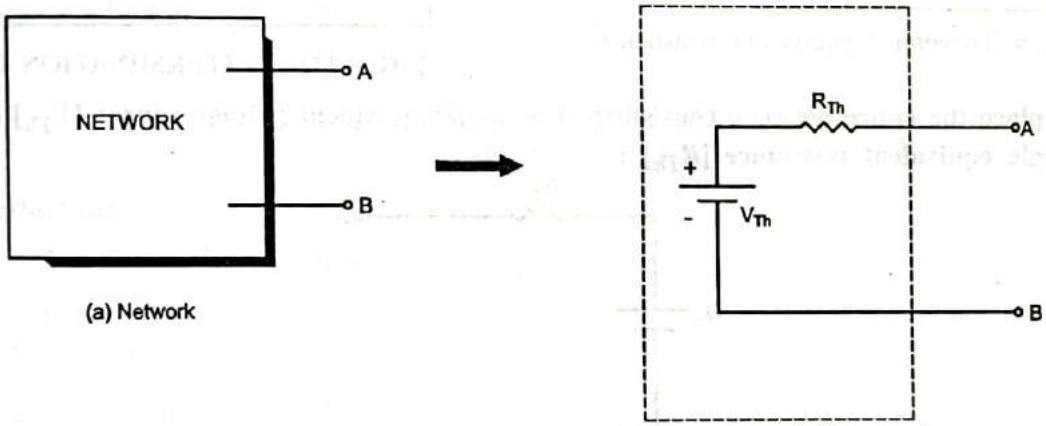


(a) Network

(b) Thevenin's equivalent network

**FIG. 1.108**

**Application :**

- The application of this theorem is to determine current in any element of given network.

**Explanation :**

- Consider the Network shown in Fig. 1.109 and we want to find current flowing through $R_L$.
- Remove the resistance $R_L$ in which current is to be determined. Thus open circuit is created between terminal AB.

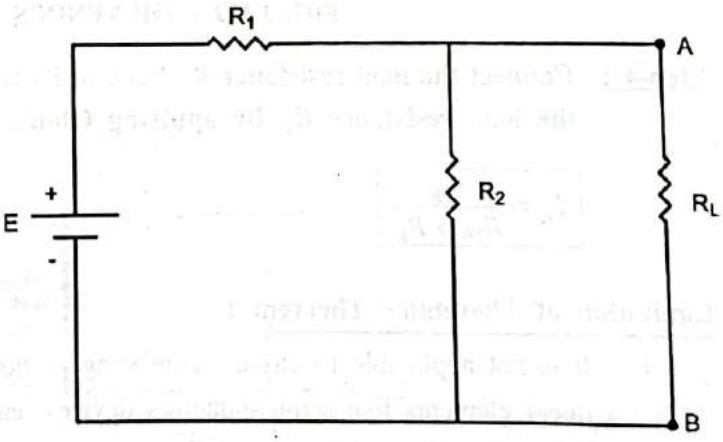


**FIG. 1.109 : ORIGINAL NETWORK**



Scanned with CamScanner

**Step-1 : Determination of $V_{Th}$ :**

Determine open circuit voltage ($V_{Th}$) between terminal A and B.

$$V_{Th} = I \times R_2 \quad \text{(Voltage across } R_2\text{)}$$

where I = Current through $R_2$

From the Fig. 1.110

$$I = \frac{E}{R_1 + R_2}$$

So, $$\boxed{V_{Th} = \frac{E}{R_1 + R_2} \times R_2} \quad \text{... (1)}$$

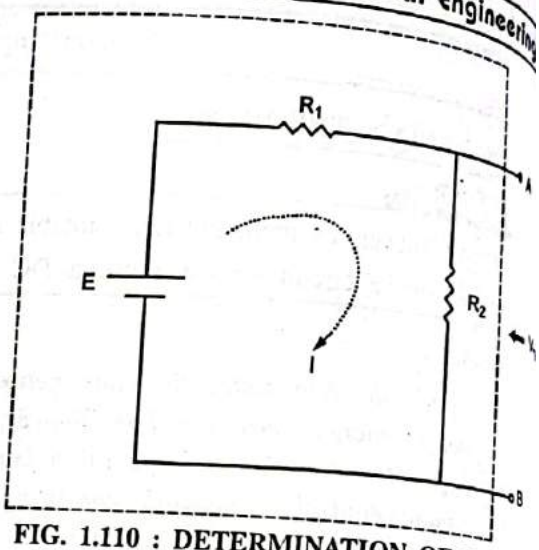


FIG. 1.110 : DETERMINATION OF $R_{Th}$

**Step-2 : Determination of $R_{Th}$ :**

Now remove the source of energy from the circuit.

The equivalent resistance of the network is given below

$$R_{eq} = R_1 \parallel R_2$$

$$\boxed{R_{Th} \text{ or } R_{eq} = \frac{R_1 \times R_2}{R_1 + R_2}} \quad \text{... (2)}$$

$R_{Th}$ = Thevenin's equivalent resistance.

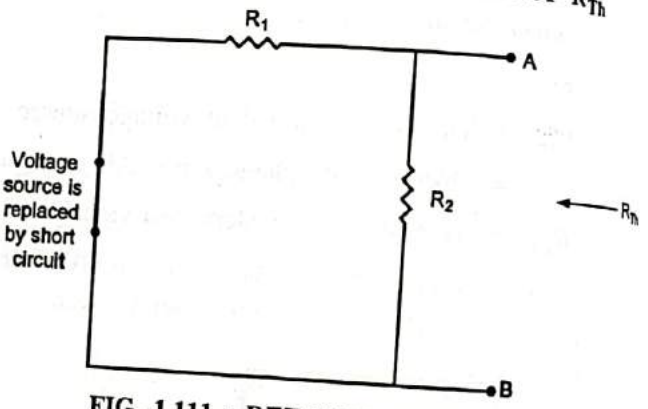


FIG. 1.111 : DETERMINATION OF $V_{Th}$

**Step-3 : Replace the entire network consisting of a single equivalent voltage source [$V_{Th}$] in series with single equivalent resistance [$R_{Th}$] :**

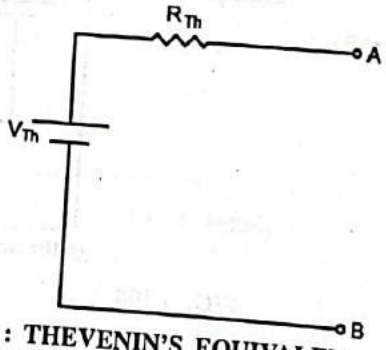


FIG. 1.112 : THEVENIN'S EQUIVALENT CIRCUIT

**Step-4 : Connect the load resistance $R_L$ back to its terminal A and B and determine the current through the load resistance $R_L$ by applying Ohm's law.**

$$\boxed{I_L = \frac{V_{Th}}{R_{Th} + R_L}} \quad \text{... (3)}$$

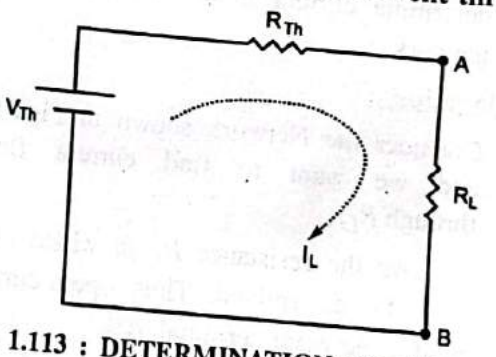


FIG. 1.113 : DETERMINATION OF CURRENT

**Limitation of Thevenin's Theorem :**

1. It is not applicable to circuits consisting of non linear elements like semiconductors devices, gas tubes etc.

Scanned with CamScanner

2. It is not applicable to the circuits consisting of magnetic coupling between the load and any other circuit element.
3. It is not applicable to the circuit consisting of load series or parallel with dependent sources.

**Example-1.31 :**

**Using Thevenin's theorem, calculate the current in 5 Ω resistor.**

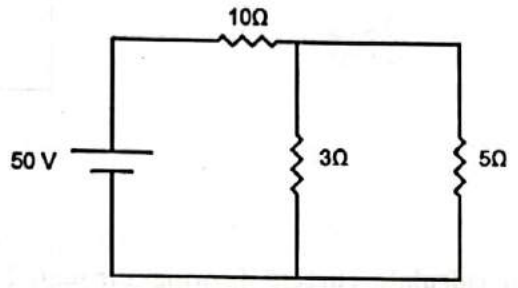


FIG. 1.114

*Solution :*

**Step-1 : Disconnect the 5 Ω resistor from the network and redraw the remaining network.**

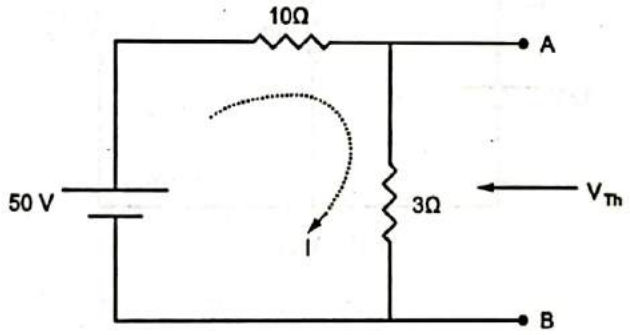


FIG. 1.115

**Step-2 : Determination of $V_{Th}$ :**

$V_{Th} = I \times R_2$ [Voltage across 3 Ω resistor]

where $I = \frac{V}{R} = \frac{50}{10+3} = \frac{50}{13}$

$= 3.48$ Amp.

$\therefore \quad V_{Th} = 3.48 \times 3$

$\therefore \quad \boxed{V_{Th} = 10.44 \text{ Volt}}$

**Step-3 : Determination of $R_{Th}$ :**

(to find $R_{Th}$, short the voltage source and draw the network)

$R_{Th} = 10 \parallel 3$

$= \frac{10 \times 3}{10+3}$

$= \frac{30}{13}$

$\boxed{R_{Th} = 2.30\,\Omega}$

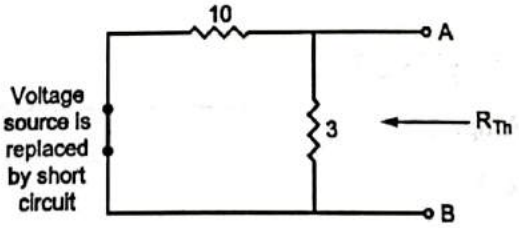


FIG. 1.116

Scanned with CamScanner

**Step-4 :** Draw Thevenin's equivalent circuit and reconnect 5 Ω resistor between A and B.

$$I_L = \frac{V}{R}$$

$$= \frac{V_{Th}}{R_{Th} + R_L}$$

$$= \frac{10.44}{2.30 + 5}$$

$$\boxed{I_L = 1.43 \text{ Amp.}}$$

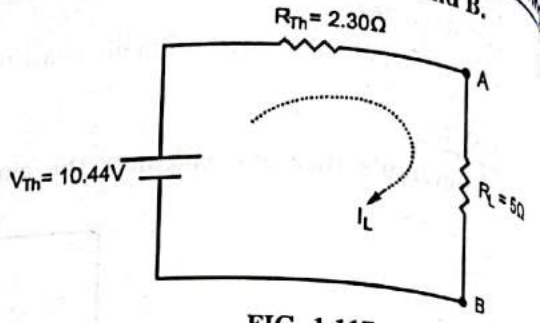


FIG. 1.117

**Example-1.32 :**

Apply Thevenin's theorem to calculate current flowing through 5 Ω resistance.

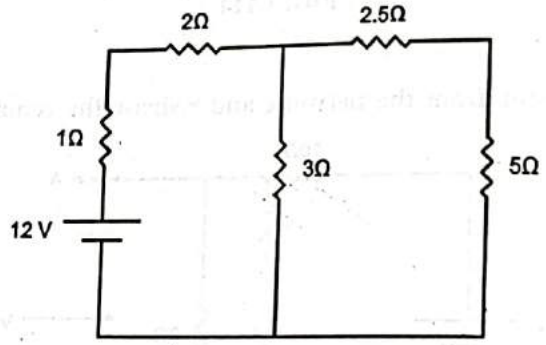


FIG. 1.118

***Solution :***

**Step-1 :** Disconnect 5 Ω resistor and draw the network shown in Fig. 1.119.

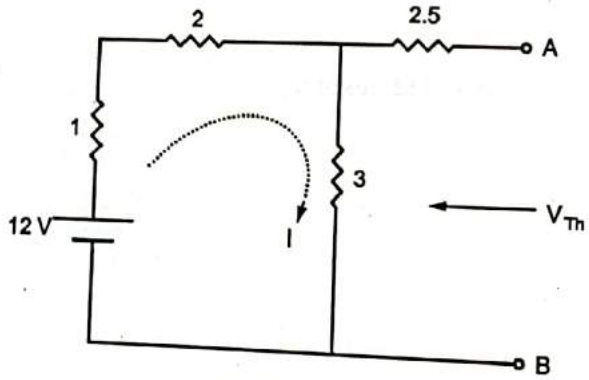


FIG. 1.119

**Step-2 :** Calculate voltage across AB terminals ($V_{Th}$)

$V_{Th} = I \times R_2$ [Voltage across 3 Ω resistor]

where $I = \frac{V}{R} = \frac{12}{1+2+3}$

$= 2$ Amp.

$V_{Th} = 2 \times 3$

$$\boxed{V_{Th} = 6 \text{ Volt}}$$

Scanned with CamScanner

**Step-3 : Determination of $R_{Th}$ :**

Short the voltage source and calculate the equivalent resistance between A and B.

$$R_{Th} = [(1 + 2) \parallel 3] + 2.5$$
$$= [3 \parallel 3] + 2.5$$
$$= \frac{3 \times 3}{3+3} + 2.5$$
$$= 1.5 + 2.5$$
$$\boxed{R_{Th} = 4\,\Omega}$$

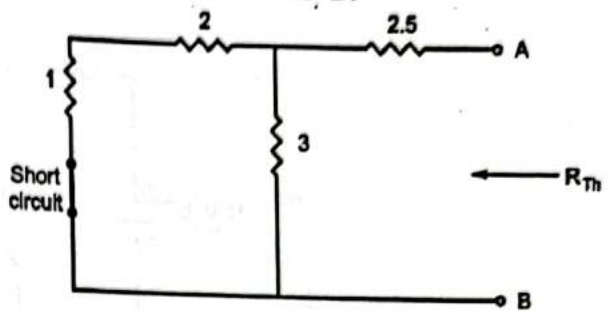


FIG. 1.120

**Step-4 : Draw the Thevenin's equivalent circuit.**

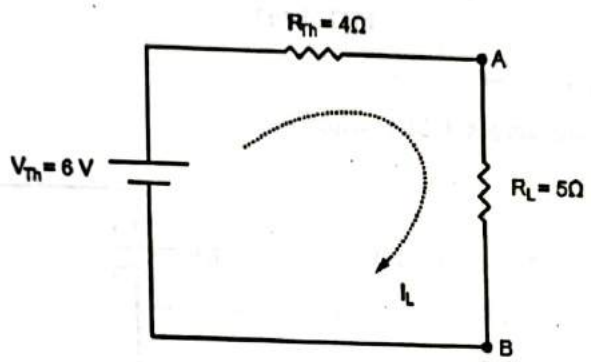


FIG. 1.121

**Step-5 : Determination of current in 5 Ω resistor**

$$I_L = \frac{V}{R} = \frac{V_{Th}}{R_{Th} + R_L} = \frac{6}{4+5} = \frac{6}{9}$$

$$\boxed{I_L = 0.66 \text{ Amp.}}$$

**Example-1.33 :**

**Using Thevenin's theorem, calculate current in 2 Ω resistor.**

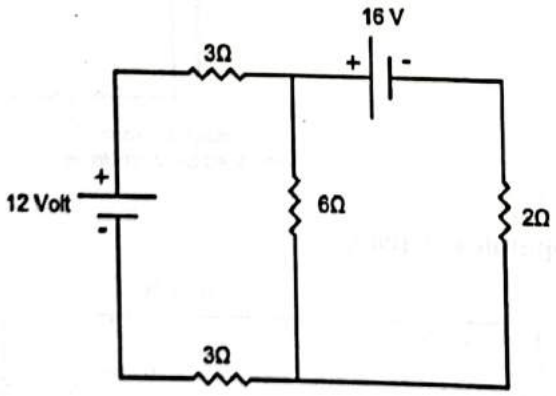


FIG. 1.122

Scanned with CamScanner

*Solution :*

**Step-1 :** **Disconnect the 2 Ω resistor and calculate the voltage across terminal AB.**

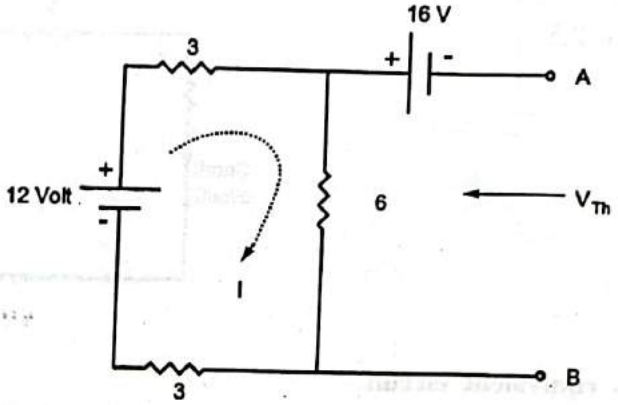


FIG. 1.123

**Step-2 :** **Determination of $V_{Th}$ :**

$$V_6 = I \times R_2 \quad \text{[voltage across 6 Ω resistor]}$$

$$\text{where } I = \frac{V}{R} = \frac{12}{3+6+3}$$

$$= 1 \text{ Amp.}$$

$$V_6 = 1 \times 6$$

$$= 6\,V \quad \text{[voltage across 6 Ω]}$$

so,

$$V_{Th} = 16 - 6$$

$$= \boxed{10\,V \text{ (with } B + Ve)}$$

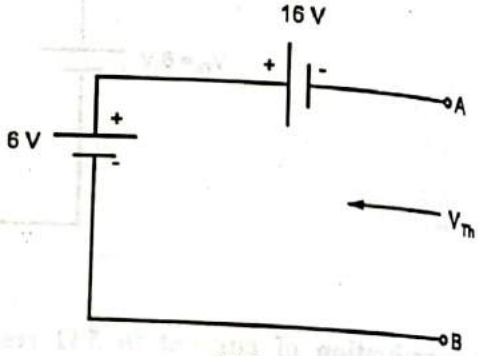


FIG. 1.124

**Step-3 :** **Determination of $R_{Th}$ :**

Short the voltage source and calculate the equivalent resistance between A and B.

$$R_{Th} = (3 + 3) \parallel 6$$

$$= 6 \parallel 6$$

$$= \frac{6 \times 6}{6+6}$$

$$\boxed{R_{Th} = 3\,\Omega}$$

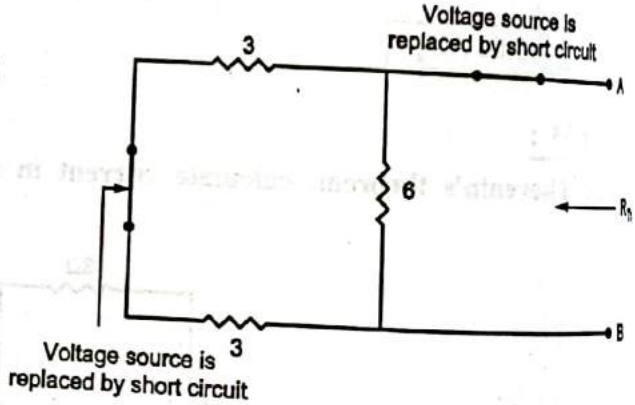


FIG. 1.125

**Step-4 :** **Draw the Thevenin's equivalent circuit.**

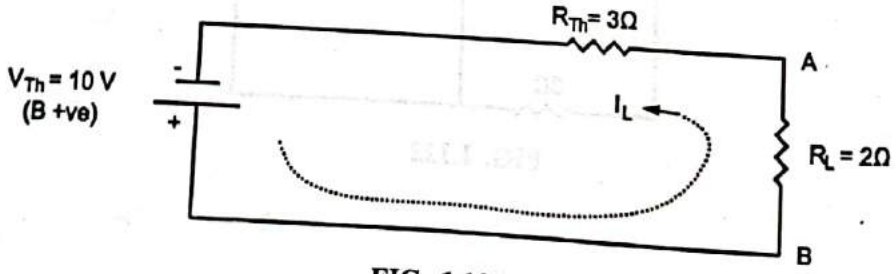


FIG. 1.126

Scanned with CamScanner

**Step-5 : Determination of current in 2 Ω resistor.**

$$I_L = \frac{V}{R} = \frac{V_{Th}}{R_{Th} + R_L} = \frac{10}{3+2} = \frac{10}{5}$$

$$\boxed{I_L = 2 \text{ Amp.}}$$

**Example-1.34 :**

**Using Thevenin's theorem find the current through 20 Ω resistance of fig. 1.127.**

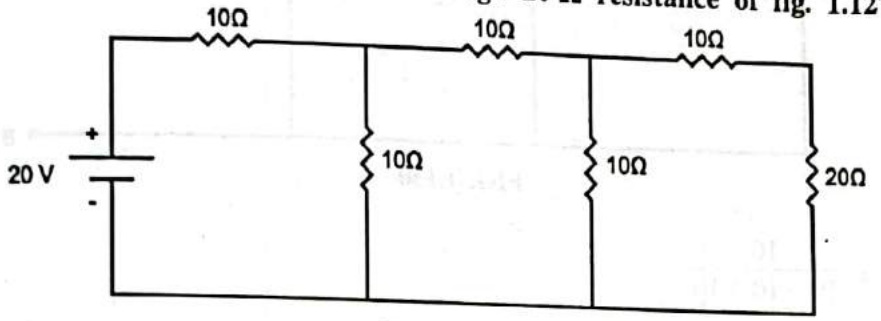


FIG. 1.127

*Solution :*

**Step-1 : Disconnect the 20 Ω resistor and calculate the voltage across terminal A and B.**

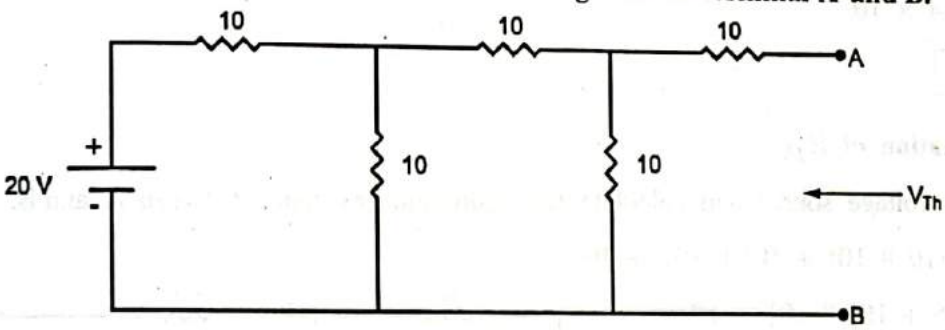


FIG. 1.128

**Step-2 : Determination of $V_{Th}$ :**

$V_{Th} = I \times R_2$ [voltage across 10 Ω resistor]

so we required to find the current through 10 Ω resistor.

$$R_{eq} = [(10 + 10) \parallel 10] + 10$$

$$= [20 \parallel 10] + 10$$

$$= \frac{20 \times 10}{20 \times 10} + 10$$

$$= \frac{200}{30} + 10$$

$$= 6.66 + 10$$

$$= 16.66\ \Omega$$

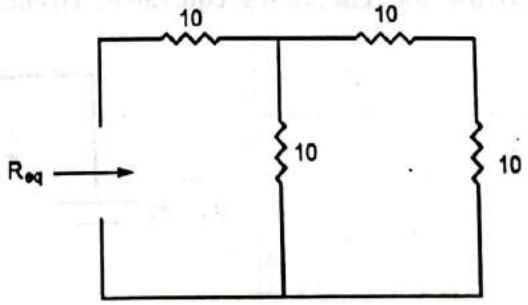


FIG. 1.129

$$\therefore \text{ Battery Current } = \frac{V}{R}$$

$$= \frac{20}{16.66}$$

$$= 1.2 \text{ Amp.}$$

Scanned with CamScanner

Thus 1.2 Amp. Current divides in two path.

According to current divider rule. Current through 10 Ω resistor.

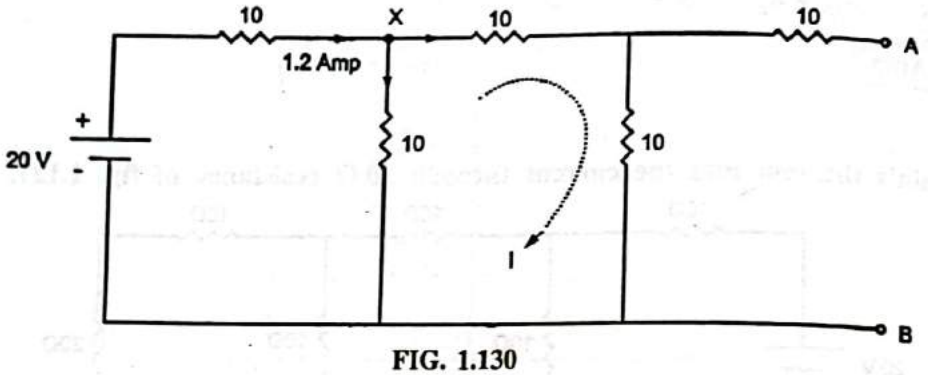


FIG. 1.130

$$I = 1.2 \times \frac{10}{10+10+10}$$

$$= 1.2 \times 0.33$$

$$= 0.4 \text{ Amp.}$$

$V_{Th} = I \times R_2$ [Voltage across 10 Ω resistor]

$$= 0.4 \times 10$$

$$\boxed{V_{Th} = 4\ V}$$

**Step-3 : Determination of $R_{Th}$ :**

Short the voltage source and calculate the equivalent resistance between A and B.

$$R_{Th} = \{[(10 \parallel 10) + 10] \parallel 10\} + 10$$

$$= \{[5 + 10] \parallel 10\} + 10$$

$$= \{15 \parallel 10\} + 10$$

$$= \frac{15 \times 10}{15 \times 10} + 10$$

$$= 6 + 10$$

$$= 16\ \Omega$$

$$\boxed{R_{Th} = 16\ \Omega}$$

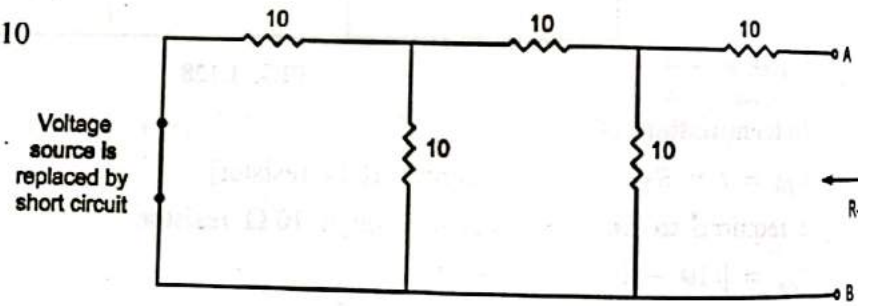


FIG. 1.131

**Step-4 : Draw the Thevenin's equivalent circuit.**

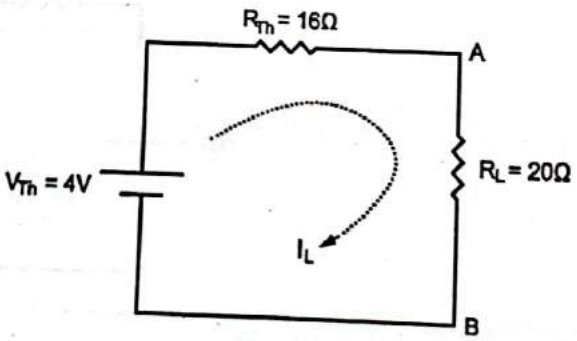


FIG. 1.132

Scanned with CamScanner

**Step-5 : Determination of current in 20 Ω resistor.**

$$I_L = \frac{V}{R} = \frac{V_{Th}}{R_{Th} + R_L} = \frac{4}{16 + 20}$$

$$\boxed{I_L = 0.11 \text{ Amp.}}$$

**Example-1.35 :**

**Using Thevenin's theorem, find the current in 8 Ω resistor in the given circuit of Fig. 1.133.**

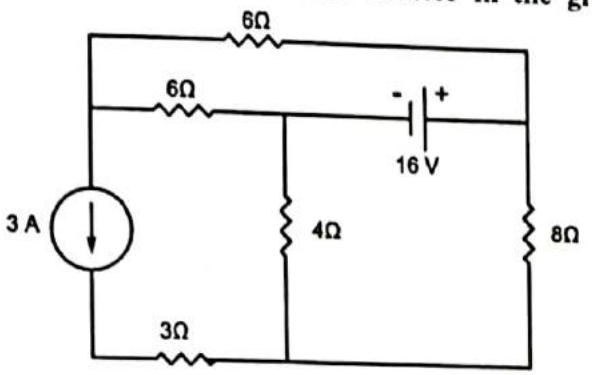


FIG. 1.134

*Solution :*

**Step-1 : Disconnect the 8 Ω resistor and calculate the voltage across terminal A and B.**

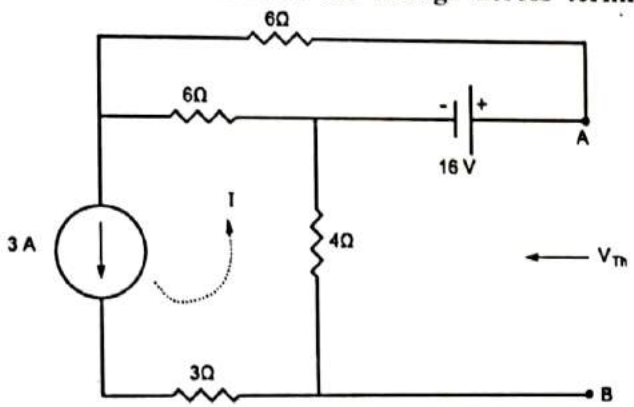


FIG. 1.135

**Step-2 : Determination of $V_{Th}$ :**

$V_4 = I \times R_2$ [voltage across 4 Ω resistor]

so we required to find the current through 4 Ω resistor, but 3 Amp. current flowing through 4 Ω resistor.

$$V_4 = I \times R_2 = 3 \times 4 = 12 \text{ V}$$

$$\boxed{V_{Th} = 16 - V_4 = 16 - 12 = 4\ V}$$

**Step-3 : Determination of $R_{Th}$ :**

Short the voltage sources and open the current source and calculate the equivalent resistance between A and B.

$$\boxed{R_{Th} = 4\ \Omega}$$

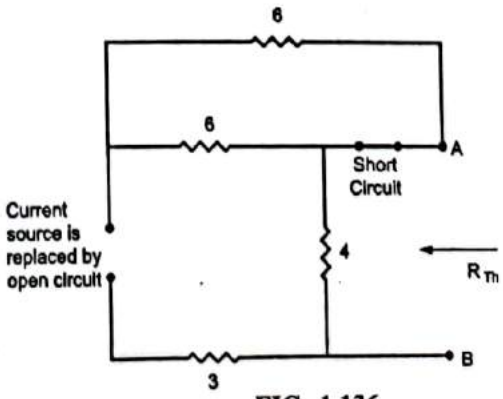


FIG. 1.136



Scanned with CamScanner

**Step-4 :** Draw the Thevenin's equivalent circuit.

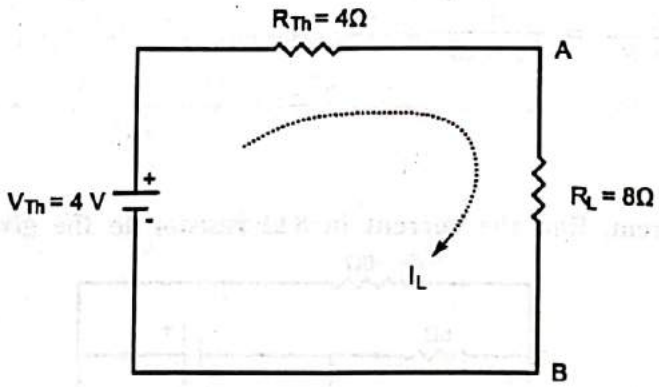


FIG. 1.137

**Step-5 :** Determination of current in 8 Ω resistor.

$$I_L = \frac{V}{R}$$

$$= \frac{V_{Th}}{R_{Th} + R_L}$$

$$= \frac{4}{4+8}$$

$$= \frac{4}{12}$$

$$= \frac{1}{3}$$

$$\boxed{I_L = 0.33 \text{ Amp.}}$$

**Example-1.33 :**

Using Thevenin's theorem to find the current through 5 Ω resistor.

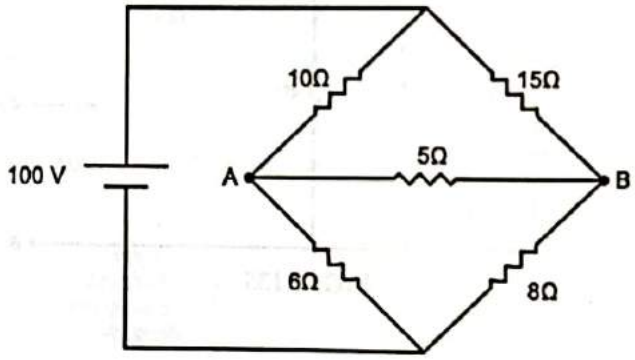


FIG. 1.138

*Solution :*

**Step-1 :** Disconnect the 5 Ω resistor and calculate the voltage across terminal A and B.

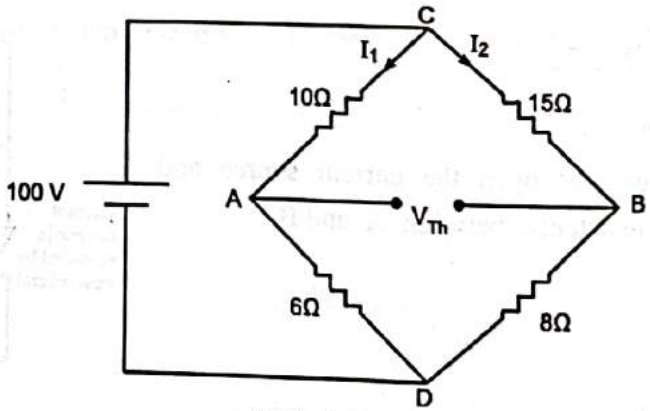


FIG. 1.139

Scanned with CamScanner

**Step-2 : Determination of $V_{Th}$ :**

Voltage between terminal A and B is equal to $V_{Th}$.

Current in Branch, $CAD = \frac{V}{R} = \frac{100}{10+6} = 6.25$ Amp.

$\therefore$ P.D. between A and C = $V_{AC} = I_1 \times R = 6.25 \times 10 =$ **62.5 Volt.**

Current in Branch, $CBD = \frac{V}{R} = \frac{100}{15+8} = 4.34$ Amp.

$\therefore$ P.D. between B and C = $V_{BC} = I_2 \times R = 4.34 \times 15 =$ **65.1 Volt.**

P.D. between A and B = $V_{BC} - V_{AC}$

$= 65.1 - 62.5$

$\boxed{V_{Th} = V_{AB} = 2.6 \text{ Volt.}}$ [with B + Ve]

**Step-3 : Determination of $R_{Th}$ :**

Short the voltage source and calculate the equivalent resistance between A and B.

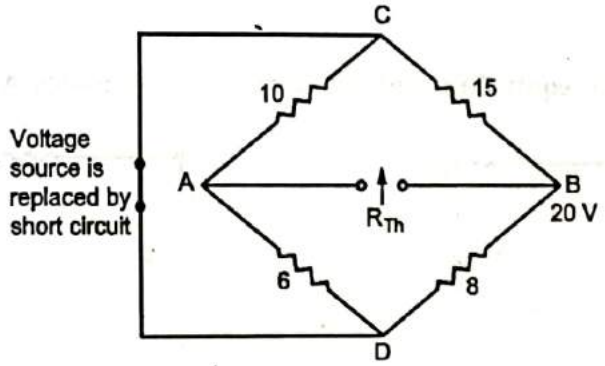


FIG. 1.140

The rearrangement of above circuit is

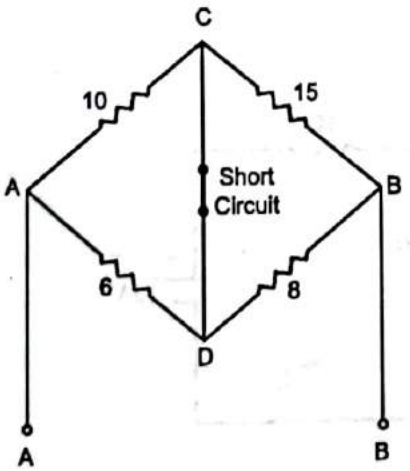


FIG. 1.141

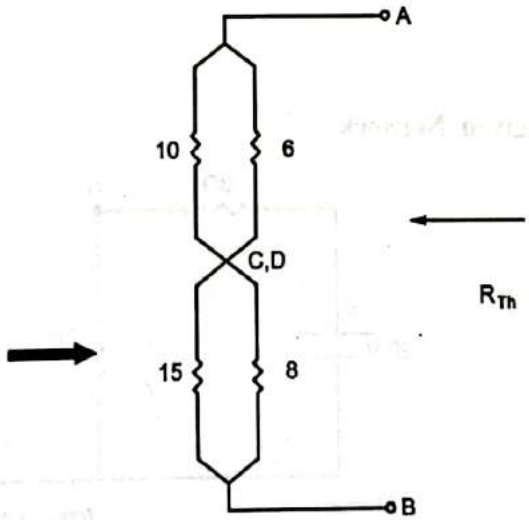


FIG. 1.142

$R_{Th} = 10 \parallel 6 + 15 \parallel 8$

$= 3.75 + 5.22$

$\boxed{R_{Th} = 8.97\ \Omega}$

Scanned with CamScanner

**Step-4 :** Draw the Thevenin's equivalent circuit.

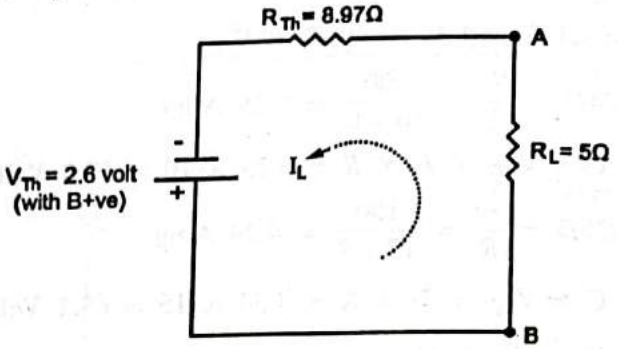


FIG. 1.143

**Step-5 :** Determination of current in 5 Ω resistor.

$$I_L = \frac{V}{R} = \frac{V_{Th}}{R_{Th} + R_L} = \frac{2.6}{8.9 + 5} = \frac{2.6}{13.9}$$

$$\boxed{I_L = 0.187 \text{ Amp.}}$$

**Example-1.36 :**

Determine the Thevenin's equivalent network across the terminals AB for the network.

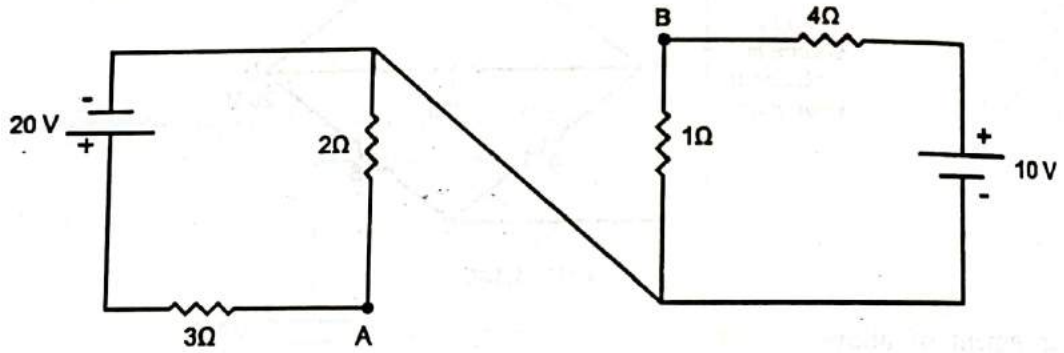


FIG. 1.144

*Solution :*

**Step-1 :** The given Network

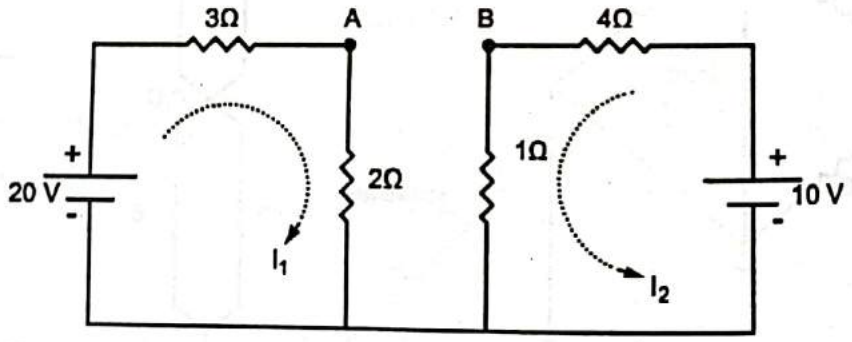


FIG. 1.145

**Step-2 :** Determination of $V_{Th}$

$V_{Th}$ = Voltage across A and B

$= (I_1 \times 2) - (I_2 \times 1)$

Scanned with CamScanner

where, $I_1 = \frac{V}{R} = \frac{20}{3+2} = \frac{20}{5} = 4$ **Amp.**

$$I_2 = \frac{V}{R} = \frac{10}{4+1} = \frac{10}{5} = 2 \text{ Amp.}$$

$$V_{Th} = V_{AB} = (4 \times 2) - (2 \times 1)$$

$$= 8 - 2$$

$$\boxed{V_{Th} = 6 \text{ Volt}}$$

**Step-3 : Determination of $R_{Th}$ :**

Short the voltage source and calculate resistance between A and B.

$$R_{Th} = [3 \parallel 2] + [1 \parallel 4]$$

$$= \frac{3 \times 2}{3+2} + \frac{4 \times 1}{4+1}$$

$$= \frac{6}{5} + \frac{4}{5}$$

$$= 1.2 + 0.8$$

$$\boxed{R_{Th} = 2\,\Omega}$$

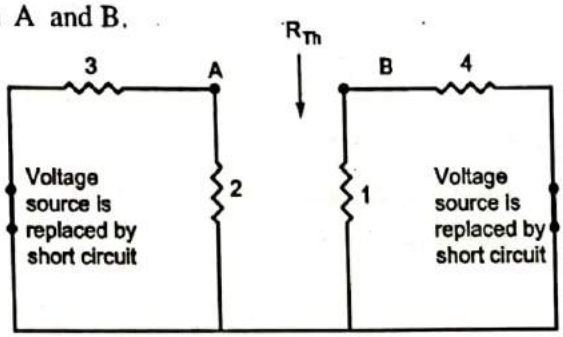


FIG.1.146

**Step-4 : Draw the Thevenin's equivalent circuit.**

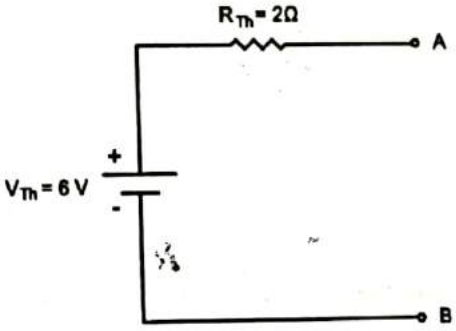


FIG. 1.147

**Example-1.37 :**

**Consider the circuit shown in Figure. Reduce the portion of the circuit to the left of terminals $a-b$ to (a) a Thevenin equivalent Find the current through R = 16 Ω.** **GTU, May-2019**

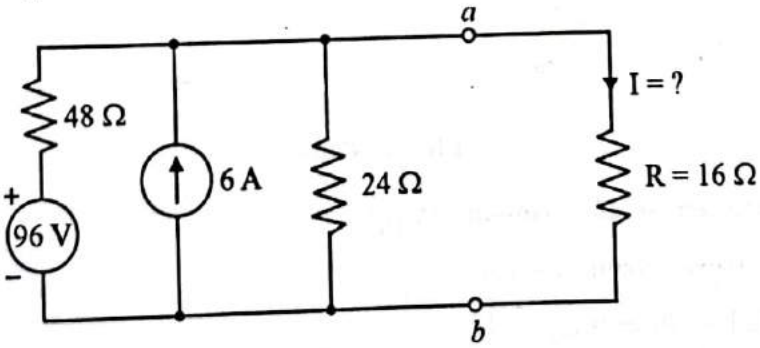


FIG. 1.147(a)

Scanned with CamScanner

*Solution :*

**Step-1 : Disconnect 16 Ω resistor and draw the network as shown in Fig. 1.47(b)**

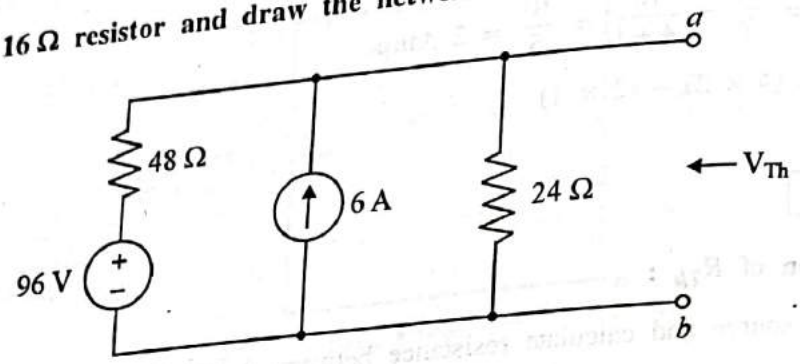


**FIG. 1.147(b)**

- By using source transformation method, we can reduce the above network.
- The 6 Amp source in parallel with 24 Ω can be replaced by a voltage source 6 × 144 V with series resistance of 24 Ω.

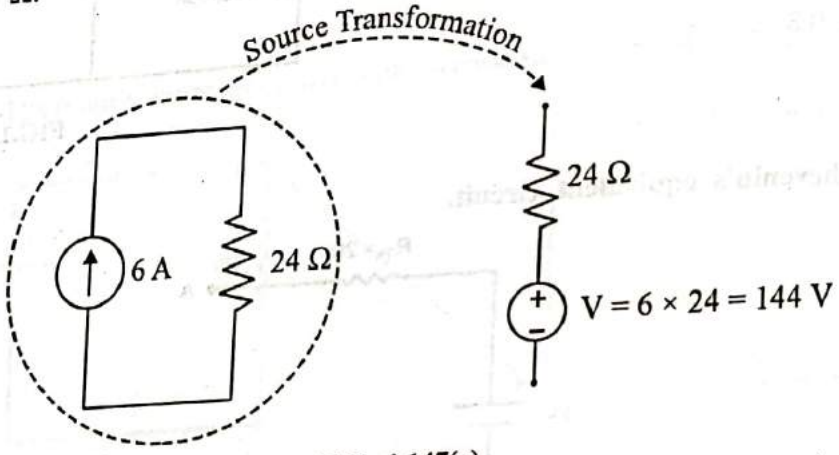


**FIG. 1.147(c)**

- The equivalent circuit with *ab* terminals as shwon in Fig. 1.147(d).

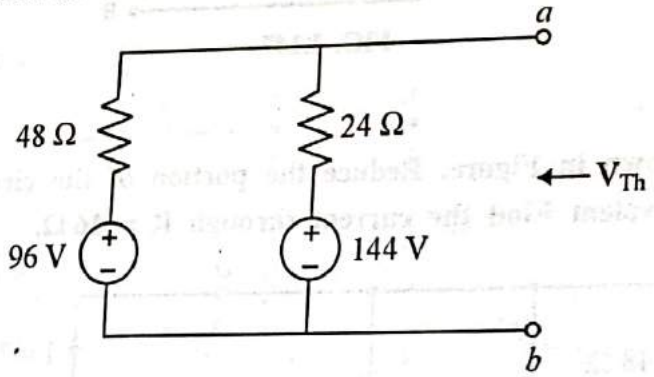


**FIG. 1.147(d)**

**Step-2 : Calculate voltage across *ab* terminals ($V_{Th}$)**

∴ Apply KVL to above circuit, we get

$$144 - 24\,I - 48\,I - 96 = 0$$

$$\therefore \quad 144 - 96 = (24 + 48)\,I$$

Scanned with CamScanner

$\therefore \quad 48 = 72\,I$

$\therefore \quad I = \frac{48}{72} = \frac{2}{3}$ Amp.

$\therefore$ Voltage across $24\,\Omega = 24 \times I$

$= 24 \times \frac{2}{3}$

$= 16$ V

$\therefore \quad V_{Th} = 144 +$ Voltage across $24\,\Omega$

$= 144 + 16$

$= \boxed{128\text{ V}}$

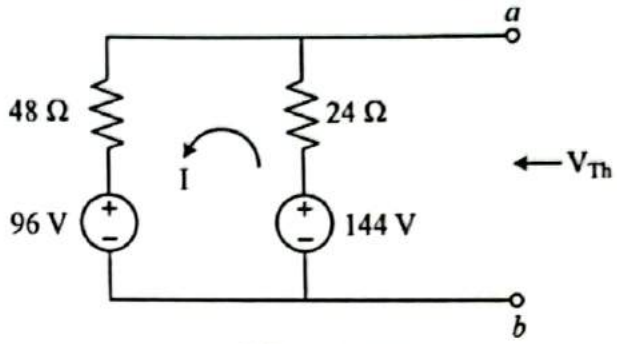


FIG. 1.147(e)

**Step-3 : Determination of $R_{Th}$**

$R_{Th} = 48 \parallel 24$

$= \frac{48 \times 24}{48 + 24}$

$= \boxed{16\,\Omega}$

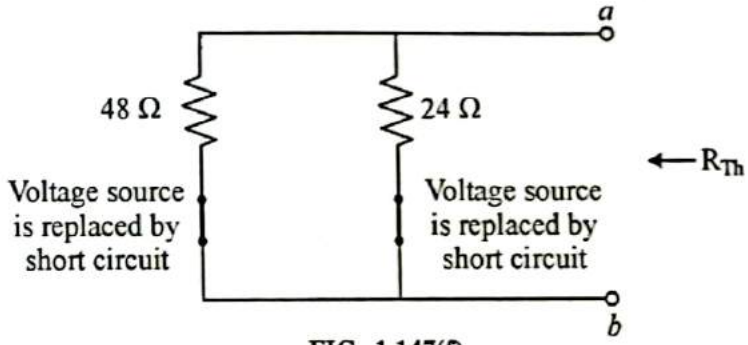


FIG. 1.147(f)

**Step-4 : Draw the Thevenin's equivalent circuit**

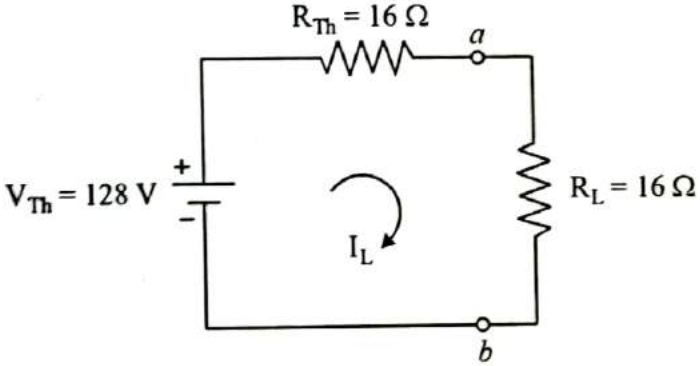


FIG. 1.147(g)

**Step-5 : Determination of current in 16 Ω**

$$I_L = \frac{V}{R} = \frac{V_{Th}}{R_{Th} + R_L} = \frac{128}{16 + 16} = \frac{128}{32} = \boxed{4\text{ Amp}}$$

**Example-1.38 :**

**For the circuit shown in Fig. 1.148. Find the Thevenin voltage ($V_{Th}$) and Resistance ($R_{Th}$) across terminal A – B.**

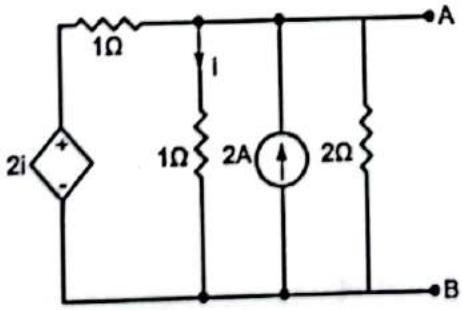


FIG. 1.148

Scanned with CamScanner

*Solution :*

**Step-1 : Calculation of $V_{OC}$ or $V_{Th}$**

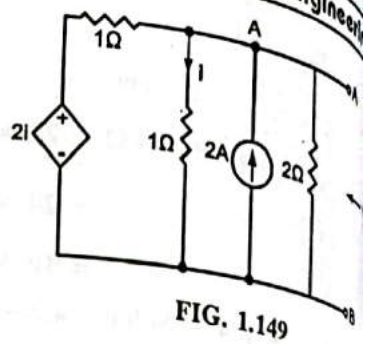

FIG. 1.149

Apply KCL at node A, we get

$$\frac{V_{OC}}{2} + \frac{V_{OC}}{1} + \frac{V_{OC} - 2i}{1} = 2 \quad \text{... (1)}$$

But $\frac{V_{OC}}{1} = i$ ... (2)

Now substitude $i = V_{OC}$ in equation (1), we get

$$\frac{V_{OC}}{2} + \frac{V_{OC}}{1} + \frac{V_{OC} - 2V_{OC}}{1} = 2$$

$$\boxed{V_{OC} \text{ or } V_{Th} = 4\,V}$$

**Step-2 : Calculation of $R_{Th}$ :**

Since in the given circuit dependent source is present, therefore, equivalent resistance can be determined as

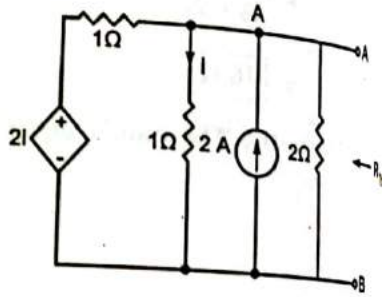

FIG. 1.150

$$R_{Th} = \frac{V_{OC}}{I_{SC}}$$

where $V_{OC}$ = Open circuit voltage (i.e., $V_{Th}$)

$I_{SC}$ = Short circuit current

Now for calculation the of $I_{SC}$ equivalent circuit of the given circuit when open terminal AB is sho can be redrawn as shown below :

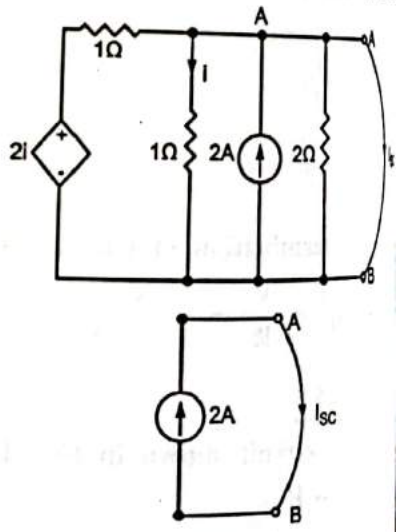

FIG. 1.151

Thus from figure-1.151, $I_{SC}$ = 2A

So, $R_{Th} = \frac{V_{OC}}{I_{SC}} = \frac{4}{2}$

$= \boxed{2\,\Omega}$

**Step-3 : Thévenin's equivalent circuit**

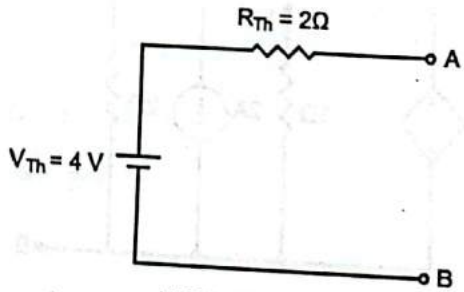

FIG. 1.152

Scanned with CamScanner

Syllabus Topic : Norton's Theorem

## 1.25 NORTON'S THEOREM :

GTU, January-2020

**GTU Questions**

1. State Norton's Theorem. [January-2020, 3-Marks]

**Statement :**

*Norton' theorem states that any network having a number of energy sources and resistances, when viewed form open its output terminal A and B. (Fig. 1.153(a)) and can be replaced by a simple equivalent network consisting of a single equivalent current source ($I_{SC}$ or $I_N$) in parallel with a single equivalent resistance ($R_{eq}$) (as shown in Fig. 1.153(b)).*

EDWARD LAWRY NORTON (1898–1983)

**EDWARD LAWRY NORTON (1898–1983)**
He was American electrical engineer .Norton served as a radio operator in the U.S Navy between 1917 and 1919. He received B.S. degree (electrical engineering) in 1922 from M.I.T and M.A. degree in electrical engineering from Columbia University in 1925. In 1926, he proposed the equivalent circuit using a current source and parallel resistor is known as Norton's equivalent circuit

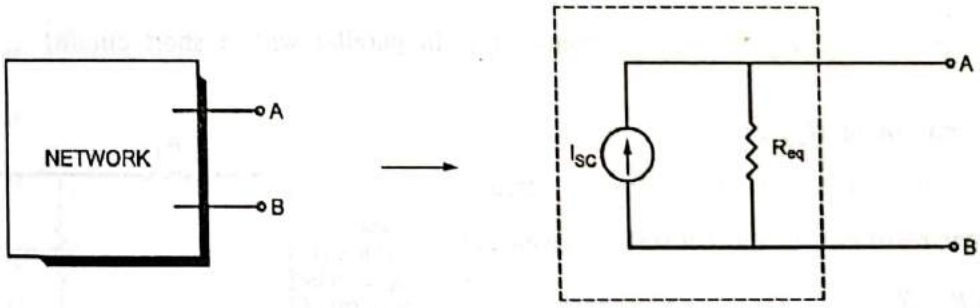


(a) NETWORK (b) Norton's equivalent network

FIG. 1.154

where,

$I_{SC}$ or $I_N$ = Norton's equivalent current source
= The value of current source is equal to the current passing through the short circuit applied at the open output terminal A and B.

$R_{eq}$ = Equivalent resistance across AB terminals when all the sources set to zero.

**Application :**

The application of this theorem is to determine current in any element of given network.

**Explanation :**

Consider the Network shown in Fig. 1.155 and we want to find current flowing through $R_L$.

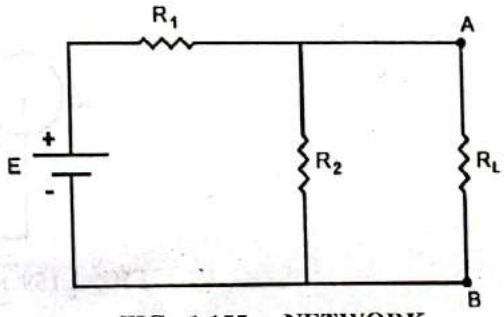


FIG. 1.155 : NETWORK



Scanned with CamScanner

Remove the resistance $R_L$ in which current is to be determined. Thus open circuit is created between terminals A and B.

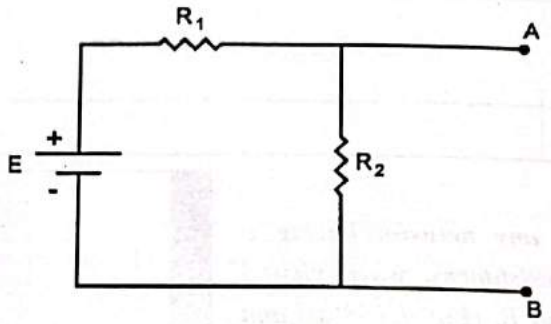


FIG. 1.156

**Step-1 : Determination of $I_{SC}$ :**

- Place a short circuit across the terminals A and B, and calculate the short circuit current $I_{SC}$ as follows.

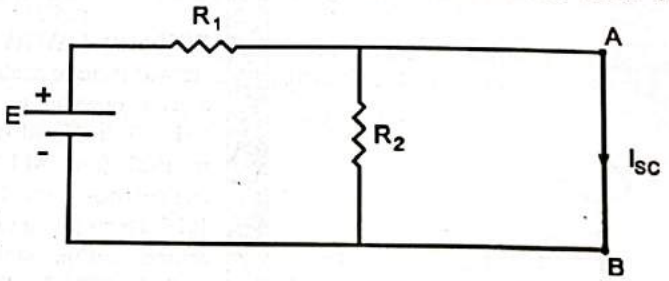


FIG. 1.157 : DETERMINATION OF $I_{SC}$

$$\boxed{I_{SC} = \frac{E}{R_1}}$$ [$\because$ $R_2$ is omitted because it is in parallel with a short circuit]

**Step-2 : Determination of $R_{eq}$ :**

- Now remove the source of energy from the circuit.
- The equivalent resistance of the network is given below

$$R_{eq} = R_1 \parallel R_2$$

$$\therefore \quad \boxed{R_{eq} = \frac{R_1 \times R_2}{R_1 + R_2}}$$

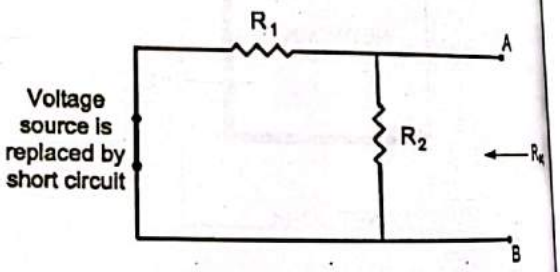


FIG. 1.158 DETERMINATION OF $R_{eq}$

**Step-3 : Replace the entire network consisting of a single equivalent current source ($I_{SC}$) in parallel with single equivalent resistance ($R_{eq}$).**

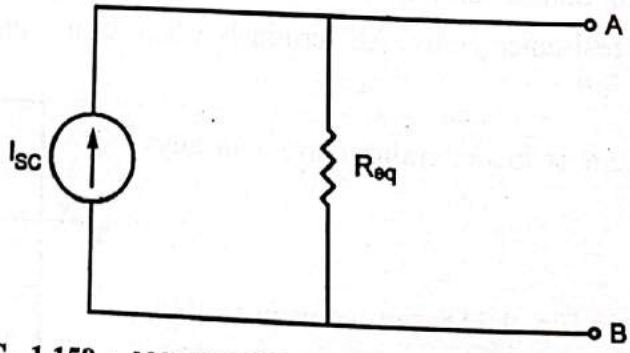


FIG. 1.159 : NORTON'S EQUIVALENT NETWORK

Scanned with CamScanner

**Step-4 :** Connect the load resistance $R_L$ back to its terminal A and B and determine the load current ($I_L$).

$$\therefore \quad \boxed{I_L = I_{SC} \times \frac{R_{eq}}{R_{eq} + R_L}}$$

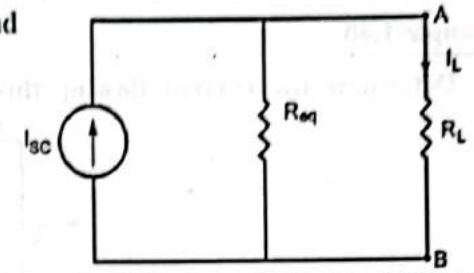


FIG. 1.160 : DETERMINATION OF CURRENT

**Example-1.39 :**

Determine Norton's equivalent circuit at terminal AB for the circuit shown in Fig 1.162.

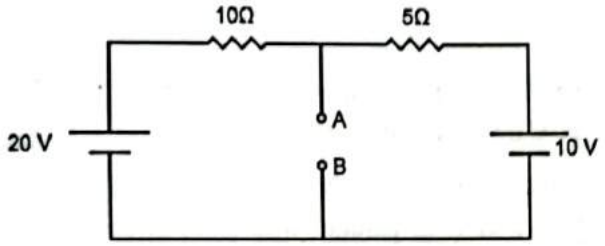


FIG. 1.162

*Solution :*

**Step-1 : Determination of $I_{SC}$ :**

Apply short circuit across terminal A and B.

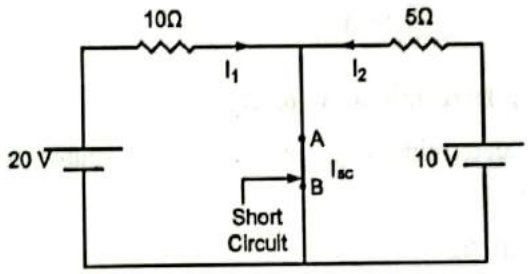


FIG. 1.163

$$I_{SC} = I_1 + I_2$$

$$= \frac{20}{10} + \frac{10}{5}$$

$$= 2 + 2$$

$$= \boxed{4 \text{ Amp.}}$$

**Step-2 : Determination of $R_{eq}$ :**

- Remove all energy source (20 V and 10 V) from the circuit.

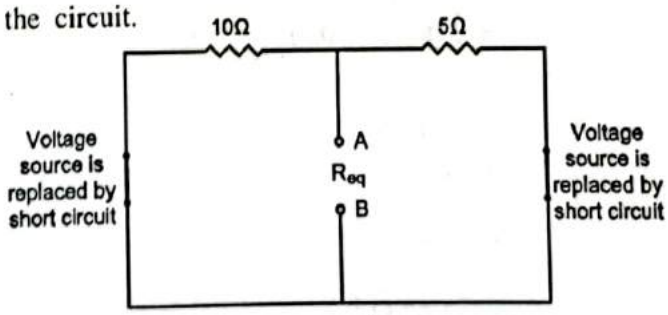


FIG. 1.164

$$\therefore \quad R_{eq} = 10 \parallel 5$$

$$= \frac{10 \times 5}{10 + 5}$$

$$= \boxed{3.33\ \Omega}$$

**Step-3 : Draw the Norton's equivalent circuit**

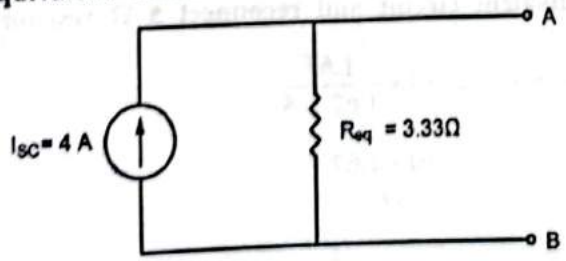


FIG. 1.165

Scanned with CamScanner

**Example-1.40 :**

**Determine the current flowing through 5 Ω resistor in the Fig. 1.166 using Norton's theorem.**

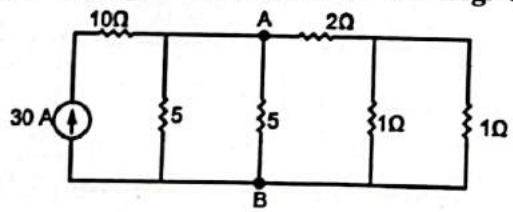


FIG. 1.166

***Solution :***

**Step-1 : Determination of $I_{SC}$ :**

Disconnect 5 Ω resistor across AB terminal and apply short circuit. The corresponding network is shown in Fig. 1.167.

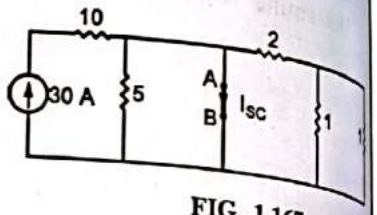


FIG. 1.167

The resistance to the right of AB terminals are shorted so no current can pass through this part. Again 5 Ω is in parallel with short circuit so it can also be omitted. The required network can be redrawn as shown in Fig. 1.168.

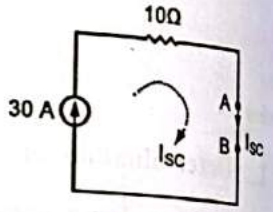


FIG. 1.168

From network of Fig. 1.168,

$$\boxed{I_{SC} = 30\ A}$$

**Step-2 : Determination of $R_{eq}$ :**

To determine $R_{eq}$, replace current source by an open circuit. The corresponding network is shown in Fig. 1.169.

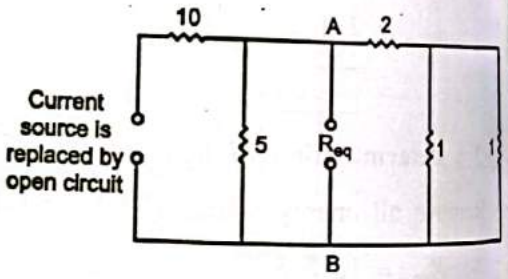


FIG. 1.169

From fig. 1.50,

$$R_{eq} = 5 \parallel (2 + 1 \parallel 1)$$

$$= 5 \parallel \left(2 + \frac{1 \times 1}{1+1}\right)$$

$$= 5 \parallel (2 + 0.5)$$

$$= 5 \parallel 2.5$$

$$= \frac{5 \times 2.5}{5 + 2.5}$$

$$= \frac{12.5}{7.5}$$

$$= \boxed{1.67\ \Omega}$$

**Step-3 : Draw the Norton's equivalent circuit and reconnect 5 Ω resistor between terminal A and B.**

The current through 5 Ω resistor $= 30 \times \dfrac{1.67}{1.67 + 5}$

$$= \frac{30 \times 1.67}{6.67}$$

$$= \boxed{7.15\ A}$$

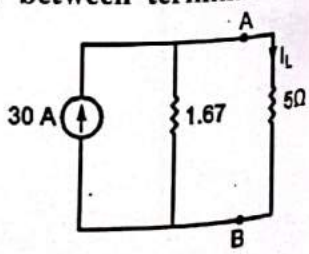


FIG. 1.170

Scanned with CamScanner

**Example-1.41 :**

**Find the Norton's equivalent circuit of given Network.**

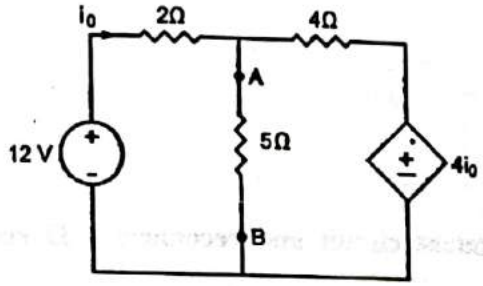


**FIG. 1.171**

***Solution :***

**Step-1 : Determination of $I_{SC}$ :**

Disconnect 5 Ω resistor and apply short circuit.

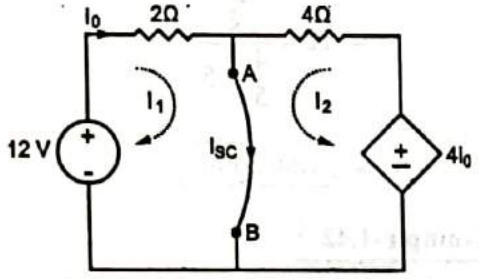


**FIG. 1.172**

Apply KVL For Loop-1

$$12 - 2I_1 = 0$$

$$\Rightarrow \boxed{I_1 = 6\text{ A} = i_0} \qquad [\because I_1 = i_0]$$

Apply KVL For Loop-2

$$4i_0 - 4I_2 = 0$$

$$\therefore \quad I_2 = i_0$$

$$\therefore \quad I_2 = i_0 = 6 \text{ Amp}$$

$$\therefore \quad I_{SC} = I_1 + I_2 = 6 + 6 = \boxed{12 \text{ Amp.}}$$

**Step-2 : Determination of $R_{eq}$ :**

As there is dependent source in the circuit, the $R_{eq}$ as,

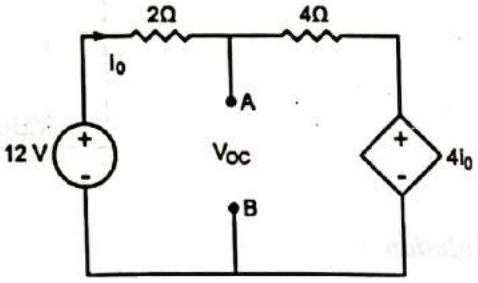


**FIG. 1.173**

$$R_{eq} = \frac{V_{OC}}{I_{SC}}$$

where $V_{OC}$ = Open circuit voltage across AB terminal

$$V_{OC} = 12 - 2i_0 \qquad \text{... (1)}$$

Now Apply KVL

$$\therefore \quad 12 - 2i_0 - 4i_0 - 4i_0 = 0$$

$$\therefore \quad 12 = 10i_0$$

$$\therefore \quad i_0 = \frac{12}{10} = \frac{6}{5} \qquad \text{... (2)}$$

Substitute the value of $i_0$ from equation (2) to equation (1), we get

$$V_{OC} = 12 - 2i_0$$

$$= 12 - 2\left(\frac{6}{5}\right)$$

$$= \frac{48}{5} \text{ volts.}$$

Scanned with CamScanner

$$\therefore \quad R_{eq} = \frac{V_{OC}}{I_{SC}}$$

$$= \frac{48}{5 \times 12}$$

$$= \boxed{\frac{4}{5}\,\Omega}$$

**Step-3 :** **Draw the Norton's equivalent circuit and reconnect 5 Ω resistor across AB.**

$$I_L = I_{SC} \times \frac{R_{eq}}{R_{eq} + R_L}$$

$$= 12 \times \frac{\frac{4}{5}}{\frac{4}{5} + 5}$$

$$= \boxed{1.66 \text{ Amp.}}$$

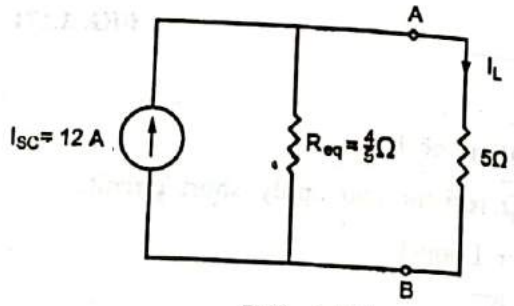


FIG. 1.174

**Example-1.42 :**

**Obtain the value of Norton's equivalent current and Norton's equivalent resistance for the network shown in the following figure.**

**GTU, January-2010**

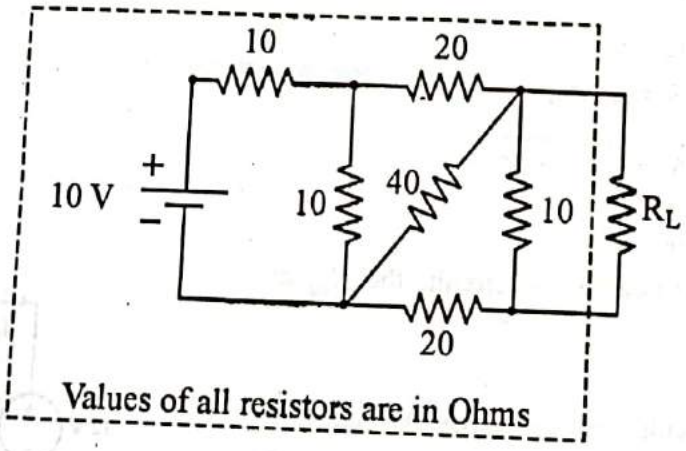


FIG. 1.174(a)

***Solution :***

**Step-1 : Determination of $I_{SC}$ :**

Apply short circuit across the terminal A and B.

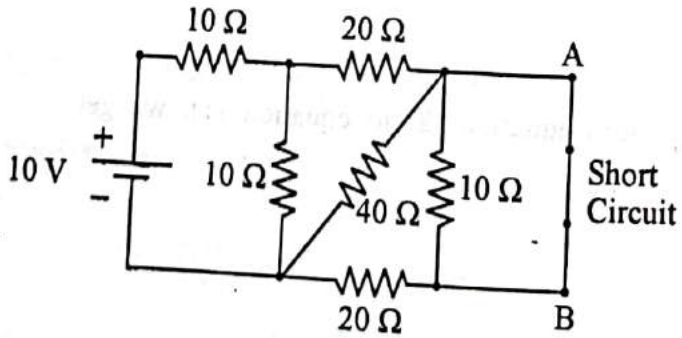


FIG. 1.174(b)

Scanned with CamScanner

The load resistance 10 Ω is short-circuited.

The new network is shown Fig. 1.174(c).

Writing the mesh equations

Applying KVL to the the circuit. Fig. 1.174(c).

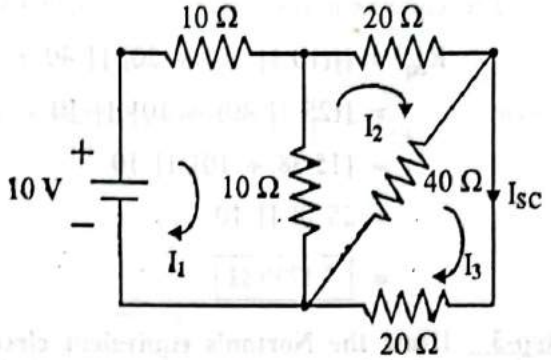


FIG. 1.174(c)

KVL for Loop-1

$$10\ I_1 + 10\,(I_1 - I_2) = 10$$

$$\therefore\ 20\ I_1 - 10\ I_2 = 10 \qquad \ldots (1)$$

Apply KVL for Loop-2

$$20\ I_2 + 40\ (I_2 - I_3) + 10\ (I_2 - I_1) = 0$$

$$\therefore\ -10\ I_1 + 70\ I_2 - 40\ I_3 = 0 \qquad \ldots (2)$$

Apply KVL for Loop-3

$$20\ I_3 + 40\ (I_3 - I_2) = 0$$

$$\therefore\ -40\ I_2 + 60\ I_3 = 0 \qquad \ldots (3)$$

From equation (1), (2) and (3)

$$\begin{bmatrix} 20 & -10 & 0 \\ -10 & 70 & -40 \\ 0 & -40 & 60 \end{bmatrix} \begin{bmatrix} I_1 \\ I_2 \\ I_3 \end{bmatrix} = \begin{bmatrix} 10 \\ 0 \\ 0 \end{bmatrix}$$

$$\text{Now } \Delta R = \begin{vmatrix} 20 & -10 & 0 \\ -10 & 70 & -40 \\ 0 & -40 & 60 \end{vmatrix} = 46000$$

$$I_3 = \frac{\begin{vmatrix} 20 & -10 & 10 \\ -10 & 70 & 0 \\ 0 & -40 & 0 \end{vmatrix}}{\Delta R} = \frac{4000}{4600} = 0.0869 \text{ Amp.}$$

$$\therefore\ I_{sc} = I_3 = 0.089 \cong \boxed{0.09 \text{ Amp.}}$$

**Step-2 : Determination of $R_{eq}$ :**

Now remove the source of energy from the circuit.

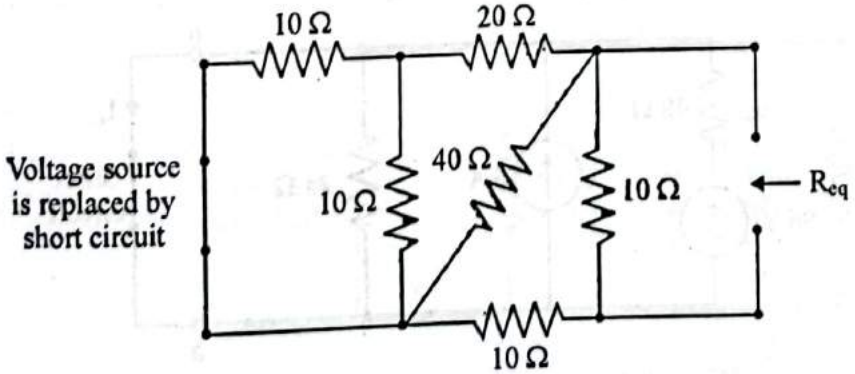


FIG. 1.174(d)

Scanned with CamScanner

The equivalent resistance of the network is given below

$$R_{eq} = \{[(10 \,||\, 10) + 20] \,||\, 40 + 10\} \,||\, 10$$
$$= \{(25 \,||\, 40) + 10\} \,||\, 10$$
$$= \{15.38 + 10\} \,||\, 10$$
$$= 25.38 \,||\, 10$$
$$= \boxed{7.1735\ \Omega}$$

**Step-3 : Draw the Norton's equivalent circuit :**

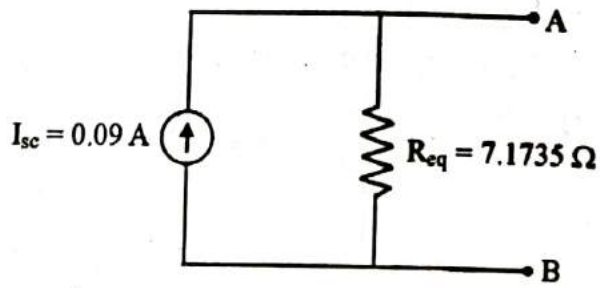


**FIG. 1.174(e)**

**Example-1.43 :**

**Consider the circuit shown in Figure. Reduce the portion of the circuit to the left of terminal $a-b$ to (a) a Norton equivalent Find the current through R = 16 Ω.**

**GTU, May-20**

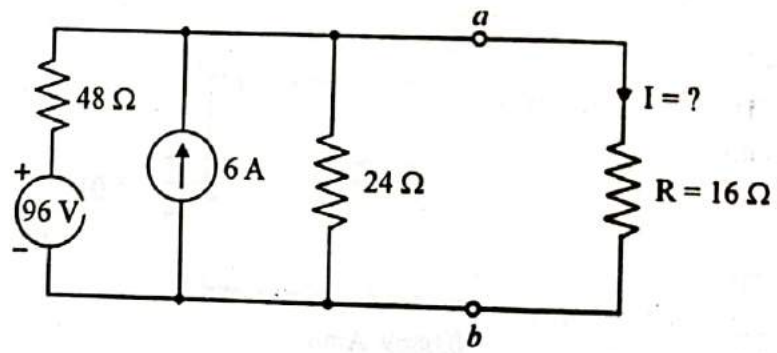


**FIG. 1.175**

***Solution :***

**Step-1 : Determination of $I_{sc}$**

Apply short circuit across terminal *a* and *b*.

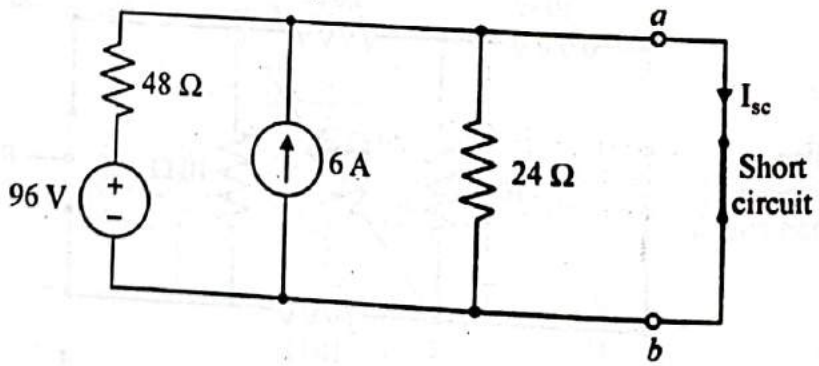


**FIG. 1.175(a)**

Scanned with CamScanner

By using source transformation method, we can reduce the above network.

The 96 V source with 48 Ω in series an be replaced by a current source $I = \frac{V}{R} = \frac{96}{48} = 2$ Amp With a parallel resistance of 48 Ω.

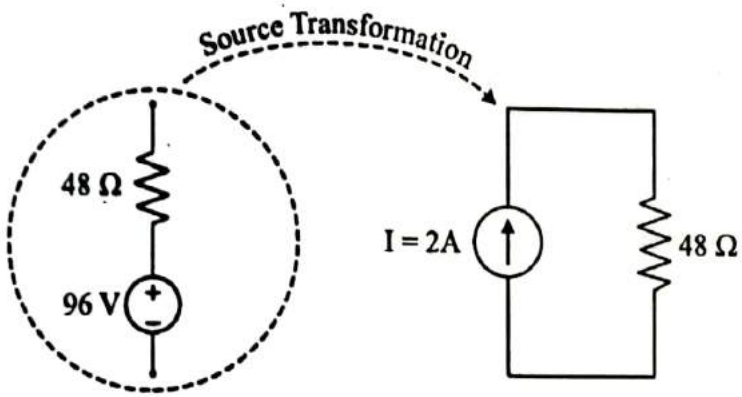


**FIG. 1.175(b)**

The equivalent circuit with *ab* terminals are as shown in Fig. 1.175(c).

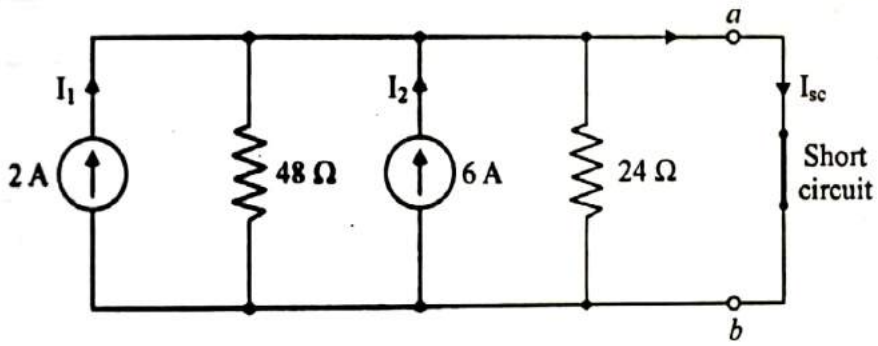


**FIG. 1.175(c)**

$$I_{sc} = I_1 + I_2$$
$$= 2 + 6$$
$$= \boxed{8 \text{ Amp}}$$

**Step-2 : Determination of $R_{eq}$**

Open the current source and calculate the equivalent resistane between *a* and *b*.

$$\therefore \quad R_{eq} = 48 \parallel 24$$
$$= \frac{48 \times 24}{48 + 24}$$
$$= \boxed{16\ \Omega}$$

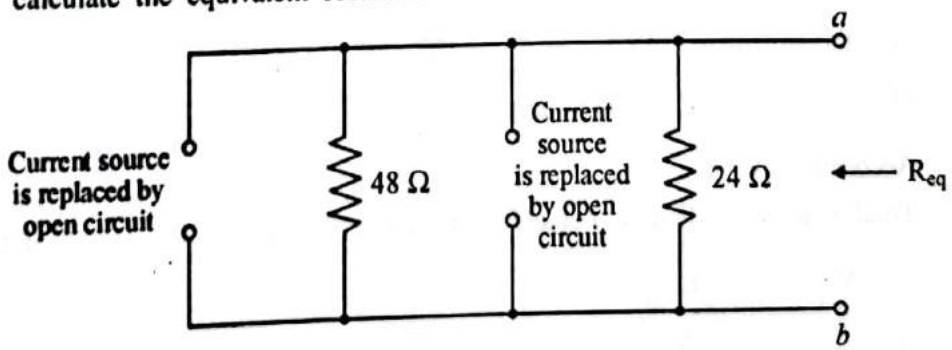


**FIG. 1.175(d)**



Scanned with CamScanner

**Step-3 :** Draw the Norton's equivalent circuit

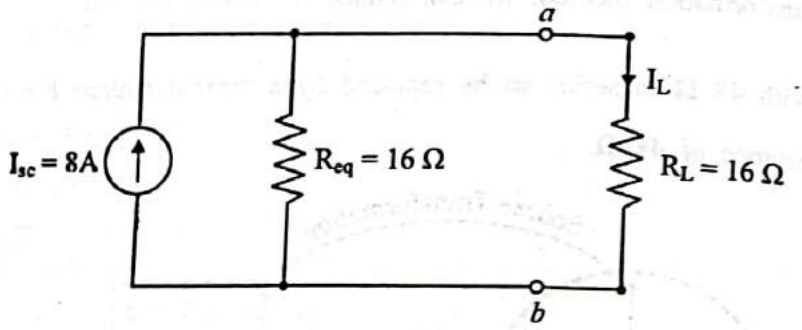


FIG. 1.175(e)

**Step-4 :** Determination of current in 16 Ω resistor.

$$I_L = I_{sc} \cdot \frac{R_{eq}}{R_{eq} + R_L}$$

$$= 8 \cdot \frac{16}{16+16}$$

$$= \frac{8 \times 16}{32} = \boxed{4 \text{ Amp}}$$

**Syllabus Topic : Time-domain analysis of first order R-L Circuit**

## 1.26 TIME-DOMAIN ANALYSIS OF FIRST ORDER R-L CIRCUIT :

**GTU Questions**

1. Derive the expression for the rise of current in an inductive circuit when a.d.c. supply is switched on to it. Define time constant. **[December-2011, 7-Marks]**

- Consider a circuit having a resistance $R$ and an inductance $L$ connected to a d.c. source of voltage $V$ as shown in Fig. 1.176(a).

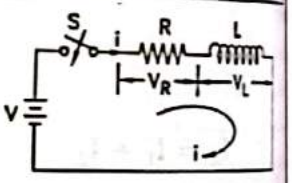


FIG. 1.176(a) : R-L CIRCUIT

- It is found that the current does not reach its maximum value instantaneously but takes some time. Thus the current increases gradually and it takes definite time to reach its maximum (final) value.
- The growth of current in the circuit is delayed because of the presence of inductance L in the circuit.
- At any instant during the growth of current, let the current be i amperes and is increasing at the rate of $\frac{di}{dt}$. This will induce an e.m.f. in the inductance which will oppose the growth of current.
- Thus, at any instant 't' after closing the switch S, the applied voltage must balance

  (1) the potential drop across $R$ i.e. $iR$ and

  (2) the self–induced e.m.f. in the inductance $L$, i.e. $L\frac{di}{dt}$

  According to *KVL*,
- Total voltage applied = Voltage drop across $R$ + the e.m.f. of self–induction

$$V = iR + L\frac{di}{dt}$$

$$V - iR = L\frac{di}{dt}$$

Scanned with CamScanner

$$\therefore \frac{di}{V-iR} = \frac{1}{L}\,dt$$

Multiplying both sides by $(-R)$

$$\frac{-R\,di}{V-iR} = \frac{-R}{L}\,dt$$

Integrating on both the sides, we get

$$\int \frac{-R}{(V-iR)}\,di = \int \frac{-R}{L}\,dt$$

$$\therefore \boxed{\log_e (V - iR) = \frac{-R}{L}t + C} \qquad \text{... (2)}$$

Where C = Constant of integration

The value of $C$ can be found from the initial condition.

Initial condition : $i = 0$ when $t = 0$

Substituting the initial condition in eqn. (2), we get

$$\log_e (V - 0) = O + C$$

$$\therefore \quad C = \log_e V$$

Hence eqn. (2) becomes

$$\log_e (V - iR) = \frac{-Rt}{L} + \log_e V$$

$$\therefore \quad \log_e (V - iR) - \log_e V = -\frac{Rt}{L}$$

$$\therefore \quad \log_e \left(\frac{V - iR}{V}\right) = -\frac{Rt}{L}$$

$$\therefore \quad \frac{V - iR}{V} = e^{\frac{-Rt}{L}}$$

$$\therefore \quad V - iR = V e^{\frac{-Rt}{L}}$$

$$\therefore \quad iR = V\left[1 - e^{\frac{-Rt}{L}}\right]$$

$$\therefore \quad i = \frac{V}{R}\left[1 - e^{\frac{-t}{\lambda}}\right] \qquad \left[\because \lambda = \frac{L}{R}\right]$$

$$\boxed{i = I_m (1 - e^{-t/\lambda})} \qquad \left[\because \frac{V}{R} = I_m\right]$$

At time $t = 0$, $i = I_m (1 - e^{o})$ $[\because e^{o} = 1]$

$= 0$

At time $t = \lambda$ (time constant)

$$i = i_m (1 - e^{-1})$$

$$= I_m \left(1 - \frac{1}{e}\right)$$

$$= I_m \left(\frac{e-1}{e}\right)$$

put $e = 2.718$

$$\boxed{i = 0.632\, I_m}$$

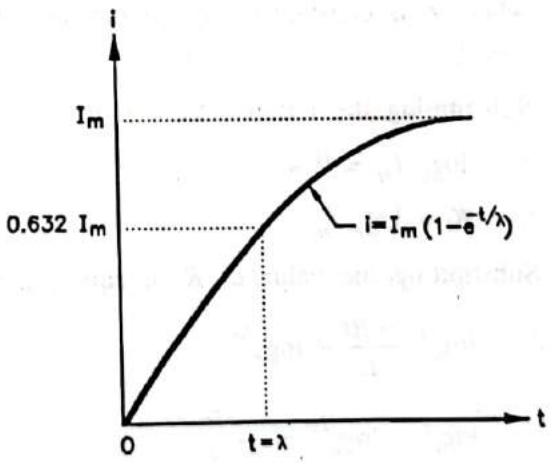


FIG. 1.176(b) : RELATION BETWEEN $I_m$ AND TIME

Scanned with CamScanner

## 1.27 DECAY IN CURRENT IN AN INDUCTIVE CIRCUIT :

**GTU Questions** GTU, December

1. derive the expression for the decay of current in an inductive circuit. Define time constant. [December-2013, 7-Marks]

- An inductive circuit containing resistance $R$ and inductance $L$ in series is shown in Fig. 1.177.
- When the switch $S$ is thrown to position 1, the current in the circuit starts rising and attains its final value $I_m \left(= \frac{V}{R}\right)$ after sometime.

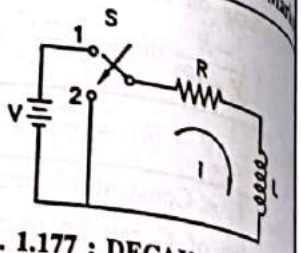


FIG. 1.177 : DECAY OF CURRENT IN INDUCTIVE CIRCUIT

- If now, the switch $S$ is thrown to position 2, the current in the circuit does not cease at once but gradually reduces to zero.
- Let the current in the circuit be $i$ amperes, $t$ seconds after the switch S is thrown to position 2. The applied voltage ($V$) to the circuit is now zero.
- The KVL equation will give

$$0 = iR + L\frac{di}{dt}$$

$$\therefore \quad -iR = \frac{L\,di}{dt}$$

$$\therefore \quad -\frac{di}{i} = -\frac{R}{L}dt$$

Integrating both sides, we have

$$\int \frac{di}{i} = \int \frac{-R\,dt}{L}$$

$$\therefore \quad \log_e i = \frac{-R}{L}t + K \qquad \ldots (1)$$

where $K$ is constant of integration and its value can be obtained from the initial condition i.e. at $t = 0$, $i = I_m$

Substituting the initial condition in eqn. (1), we get

$$\therefore \quad \log_e I_m = 0 + K$$

$$\therefore \quad K = \log_e I_m$$

- Substituting the value of $K$ in eqn. (1), we have

$$\therefore \quad \log_e i \; \frac{-Rt}{L} + \log_e I_m$$

$$\therefore \quad \log_e i - \log_e I_m = -\frac{Rt}{L}$$

$$\therefore \quad \log_e\left(\frac{i}{I_m}\right) = -\frac{Rt}{L}$$

Scanned with CamScanner

$$\therefore \quad \frac{i}{I_m} = -e^{\frac{-Rt}{L}}$$

$$\therefore \quad \boxed{i = I_m e^{-t/\lambda}} \qquad [\because \lambda = L / R]$$

- The above equation shows the relationship between the current in the circuit as a function of time. It shows that the current in the circuit reduces exponentially and becomes zero when $t$ approaches infinity although in actual practice it does so in a relatively short time.
- The decay of current is shown in Fig. 1.179.

Now in eqn.

Putting $t = \lambda$, we get

$$i = I_m e^{-\lambda/\lambda}$$

$$= I_m e^{-1}$$

$$= \frac{I_m}{e}$$

$$\boxed{= 0.368\ I_m}$$

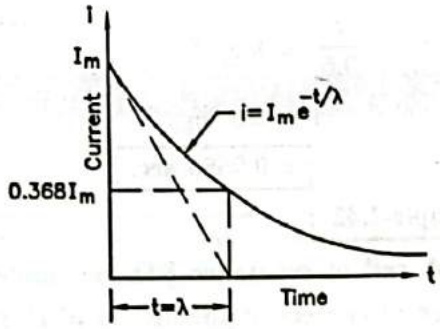


**FIG. 1.179 : RELATIONSHIP BETWEEN DECAY OF CURRENT DAND TIME**

- From this we can again define the time constant ($\lambda$) as follows :
- "It may be defined as that time during which current falls to 0.368 times of its initial maximum steady value while decaying."

**Example-1.41 :**

**A coil having a resistance of 20 Ω and inductance of 12 H is connected to a constant supply voltage of 100 V. Find (i) the rate of change of current at the instant of closing the switch. (ii) Final steady value of the current (iii) time constant and (iv) time taken for the current to reach a value of 4 A.**

***Solution :***

(i) Initial rate of rise of current, $\left.\frac{di}{dt}\right| = \frac{V}{L}$

$$= \frac{100}{12}$$

$$\boxed{= 8.33 \text{ A/sec.}}$$

(ii) Final steady value, $I_m = \frac{V}{R}$

$$= \frac{100}{20}$$

$$\boxed{= 5 \text{ A}}$$

(iii) Time constant, $\lambda = \frac{L}{R}$

$$= \frac{12}{20}$$

$$\boxed{= 0.60 \text{ sec.}}$$

Scanned with CamScanner

(iv) $i = I_m\ [1 - e^{-t/\lambda}]$

$$4 = 5\ [1 - e^{-t/0.6}]$$

$$0.8 = 1 - e^{-t/0.6}$$

$$e^{-t/0.6} = 1.08$$

$$= 0.2$$

$$e^{t/0.6} = \frac{1}{0.2} = 5$$

$$\therefore \quad \frac{t}{0.6} = \log_e 5$$

$$t = 0.6 \log_e 5$$

$$\boxed{= 0.9656 \text{ sec.}}$$

**Example-1.42 :**

**A coil of resistance 8 Ω and inductance 0.5 H is connected to 110 V d.c. supply. Find (i) rate change of current at the instant of closing the switch (ii) final steady value of current (iii) time constant of the circuit (iv) time taken for the current to rise to half its value.**

***Solution :***

**Given :**

R = 8 Ω, L = 0.5 H, V = 110 V

(i) Initial rate of change of current $= \frac{V}{L}$

$$= \frac{110}{0.5}$$

$$\boxed{= 220 \text{ A/sec.}}$$

(ii) Final steady value of current, $I_m = \frac{V}{R}$

$$= \frac{110}{8}$$

$$\boxed{= 13.75 \text{ A}}$$

(iii) Time constant, $\lambda = \frac{L}{R}$

$$= \frac{0.5}{8}$$

$$\boxed{= 0.0625 \text{ sec.}}$$

(iv) Current at any time is given by

$$i = I_m\ [1 - e^{-t/\lambda}]$$

When $i = I_m/2$ $t = ?$

$$\therefore \quad \frac{I_m}{2} = I_m\ [1 - e^{-t/0.0625}]$$

$$\therefore \quad \frac{1}{2} = 1 - e^{-t/0.0625}$$

Scanned with CamScanner

$$\therefore \quad e^{-t/0.0625} = \frac{1}{2}$$

$$\therefore \quad e^{-t/0.0625} = 2$$

$$\frac{t}{0.0625} = \log_e 2$$

$$t = 0.0625 \ \lg_e 2 = \boxed{0.0433 \text{ sec.}}$$

**Syllabus Topic : Time-domain Analysis of First Order R-C Circuit**

## 1.28 TIME-DOMAIN ANALYSIS OF FIRST ORDER R-C CIRCUIT :

**GTU, April-2010; Dec. 2008, 2010; May-2011, 2017; Jan. 2019, 2020**

### 1. Charging of Capacitor :

**GTU Questions**

1. Derive the expression for the voltage across the capacitor at any instant after the application of dc voltage V to a circuit having a capacitance C in series with resistance R. **[December-2008, 7-Marks]**
2. Derive equation for charging of capacitor in RC circuit. Also define time constant of circuit. **[April-2010, 8-Marks]**
3. Derive an expression fro the voltage across the capacitor during charging through the resistor at any instant $V_c = V\ (1 - e^{-t/T})$ where V is the battery source voltage and T is the time constant of the circuit. **[December-2010, January-2020, 7-Marks]**
4. Explain charging and discharging of a capacitor, C, through a resistor, R, with neat sketch and derive the equation $V_c = V\ (1 - e^{-t/RC})$. Assume that the R-C series circuit is connected across a d.c. supply of voltage V. **[May-2011, 7-Marks]**
5. Explain the charging and discharging of capacitor. **[May-2017, 7-Marks]**
6. Derive the equations of capacitor voltage and circuit current in a series R-C circuit connected to a DC supply through a switch. Assume that switch is initially open and it is closed at time t = 0 second. **[January-2019, 7-Marks]**

- Figure 1.179 shows a capacitor of capacitance $C$ connected in series with a resistor $R$ and the combination is connected to a d.c. supply of V volts through a switch S.
- At the instant of closing the switch S, there is no charge on the capacitor and therefore no potential difference across it.
- After closing the switch, the capacitor starts charging and voltage across it increases gradually.

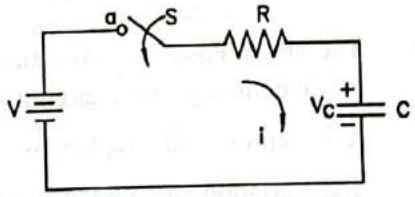


**FIG. 1.179 : R-C CIRCUIT**

Let at any instant during charging,

$v_c$ = potential difference across the capacitor

$i$ = charging current

$q$ = charge on the capacitor

According to Kirchhoff's second law,

Applied voltage = p.d. across $R$ + p.d. across $C$ ... (i)

$$\therefore \quad V = iR + v_c$$

$$= C\frac{dv_c}{dt} \times R + v_c \qquad \left[\because \ i = \frac{dq}{dt} = \frac{d}{dt}(Cv_c) = C\frac{dv_c}{dt}\right]$$

$$= v_c + RC\frac{dv_c}{dt}$$

$$= V - v_c = RC\frac{dv_c}{dt}$$

Scanned with CamScanner

$$\therefore \quad \frac{dv_c}{V - v_c} = \frac{1}{RC}\,dt$$

Multiplying both the sides by negative sign

$$\therefore \quad \frac{-dv_c}{V - v_c} = \frac{-1}{RC}\,dt$$

Integrating on both sides

$$\int \frac{-dV_c}{V - v_c} = \int \frac{-1}{RC}\,dt$$

$$\therefore \quad \log_e (V - v_c) = \frac{-t}{RC} + K \qquad \text{... (ii)}$$

where K is a constant of integration.

- Its value can be determined from the initial conditions. At the instant of closing the switch, the ini conditions are,

$$t = 0 \quad \text{and} \quad v_c = 0$$

Substituting the initial conditions in eqn. (ii), we get

$$\log_e (V - 0) = 0 + K$$

$$\therefore \quad K = \log_e V$$

Substituting the value of K in eqn. (ii), we get,

$$\therefore \quad \log_e (V - v_c) = \frac{-t}{RC} + \log_e V$$

$$\therefore \quad \log_e (V - v_c) - \log_e V = -\frac{t}{RC}$$

$$\therefore \quad \log_e \left(\frac{V - v_c}{V}\right) = \frac{-t}{RC}$$

$$\therefore \quad \frac{V - v_c}{V} = e^{-t/RC}$$

$$\therefore \quad V - v_c = V\,e^{-t/RC}$$

$$\therefore \quad \boxed{v_c = V\,[1 - e^{-t/RC}]}$$

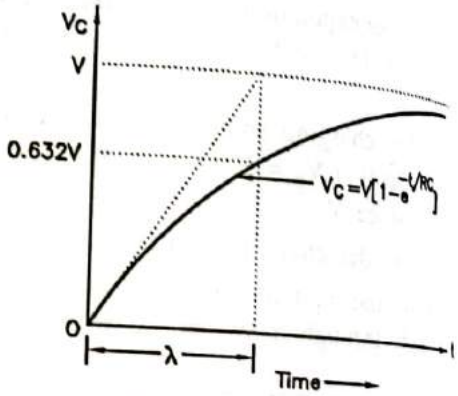


**FIG. 1.180 : RELATION BETWEEN $V_c$ AND TIME**

- The above equation gives an expression showing the variation of voltage across the capacitor with respec to time during the charging process of the capacitor.
- It is represented graphically in Fig. 1.180.
- The variation of voltage across the capacitor follows an 'exponential law

**2. Discharging of Capacitor :**

**GTU Questions** **GTU, May-2011, 2017; January-2020**

1. Explain charging and discharging of a capacitor, C, through a resistor, R, with neat sketch and derive the equation $V_c = (1 - e^{-t/RC})$. Assume that the R-C series circuit is connected across a d.c. supply of voltage V. **[May-2011, January-2020, 7-Marks]**
2. Explain the charging and discharging of capacitor. **[May-2017, 7-Marks]**

- Consider a capacitor of *C* farads connected in series with a resistor of *R* ohms and a switch S. When the switch is in position 'a', the capacitor gets charged to V volts.
- When the switch S is closed to position 'b' the charge on the capacitor starts decreasing and so does the voltage across it.

Scanned with CamScanner

- Let at any time during discharging,

$v_c$ = p.d. across the capacitor
$i$ = discharging current
$q$ = charge on the capacitor
= $C\,v_c$

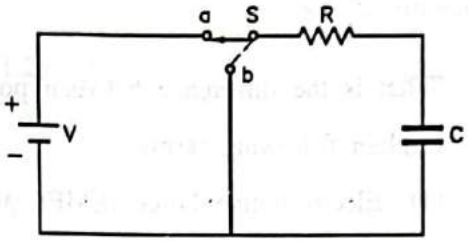


FIG. 1.181

According to kVL,

$$0 = v_c + i\,R$$

$$\therefore \quad 0 = v_c + RC\,\frac{dv_c}{dt} \qquad \left[i = \frac{dq}{dt} = \frac{d}{dt}\left(Cv_c\right) = C\frac{dv_c}{dt}\right]$$

$$\therefore \quad \frac{dv_c}{v_c} = -\frac{dt}{RC}$$

Integrating both sides, we get,

$$\boxed{\log_e v_c = -\frac{1}{RC}t + K_1} \qquad \text{... (i)}$$

Where $K_1$ is a constant of integration which can be determined from the initial conditions.

**Initial conditions :**

$t = 0,\ v_c = V$

Substituting the initial conditions in equation (i)

$$\log_e V = 0 + K_1$$

$$\therefore \quad K_1 = \log_e V$$

Hence equation (i), becomes

$$\log_e v_c = \frac{-t}{RC} + \log_e V$$

or $$\log_e \frac{v_c}{V} = \frac{-t}{RC}$$

$$\therefore \quad \frac{v_c}{V} = e^{-t/RC}$$

$$v_c = Ve^{-t/RC}$$

$$\boxed{= V\,e^{-t/\lambda}} \qquad \text{... (ii)} \qquad [\because \lambda = RC = \text{time constant})$$

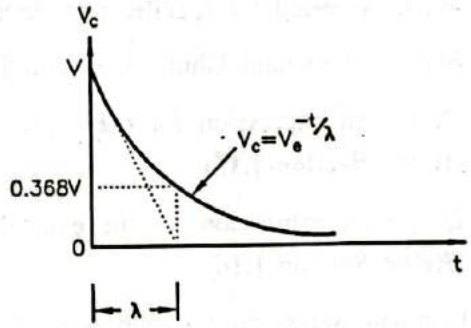


FIG. 1.182

- The above expression shows the variation of voltage ($v_c$) across the capacitor with time while discharging. It is represented in Fig. 1.182.

**Variation of discharging current :**

We know that

$$O = v_c + iR$$

$$\therefore \quad iR = -v_c$$

$$= -V\,e^{-t/\lambda}$$

$$i = \frac{-V}{R}\,e^{-t/\lambda}$$

$$\boxed{= -I_m\,e^{-t/\lambda}} \qquad \left[\because I_m = \frac{V}{R} = \text{initial current}\right]$$

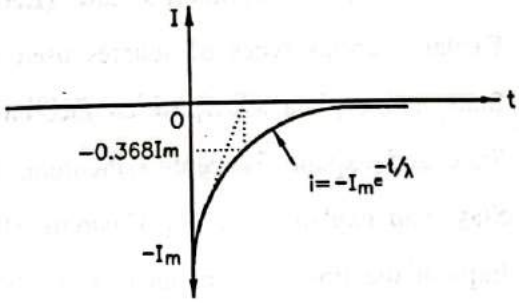


FIG. 1.183

- The above expression shows the variation of discharging current with time.
- Negative sign indicates that the current flows in the opposite direction with respect to the charging process.
- It is shown graphically in the Fig. 1.183.



Scanned with CamScanner

## EXERCISE

1. What is the difference between potential and potential difference ? **(Refer Section-1.2 & 1.3)**
2. Explain following terms :
   (1) Electromotive Force (EMF) **(Refer Section-1.4.1)**
   (2) Electric current **(Refer Section-1.5.1)**
   (3) Power **(Refer Section-1.14(1))**
   (4) Electrical Energy **(Refer Section-1.14(2))**
3. Explain following Electrical Elements :
   (1) Resistance **(Refer Section-1.6)**
   (2) Inductor **(Refer Section-1.7)**
   (3) Capacitor **(Refer Section-1.8)**
4. What are the factors affecting the Resistance value ? **(Refer Section-1.9.1)**
5. Explain the effect of increase in temperature on metals, alloys and insulators. **(Refer Section-1.11)**
6. Define temperature coefficient of resistance. **(Refer Section-1.12)**
7. What is meant by specific resistance ? Drive its unit. **(Refer Section-1.10)**
8. State and explain Ohm's Law and its Limitations. **(Refer Section-1.13)**
9. Derive an expression for the equivalent resistance of a number of resistance connected in series. **(Refer Section-1.15)**
10. Derive an expression for the equivalent resistance of a number of resistances connected in parallel. **(Refer Section-1.16)**
11. Compare series circuit with parallel circuit. **(Refer Section-1.17)**
12. Why domestic appliances connected in parallel ? **(Refer Section-1.16)**
13. Explain the methods of transforming a star connected network in a delta network and vice versa. **(Refer Section-1.19)**
14. State an explain Kirchhoff's Law. **(Refer Section-1.21)**
15. Explain various types of sources used in D.C. Circuit. **(Refer Section-1.22)**
16. State and explain superposition theorem. **(Refer Section-1.23)**
17. State and explain Thevenin's theorem. **(Refer Section-1.24)**
18. State and explain Norton's Theorem. **(Refer Section-1.25)**
19. Explain the time domain analysis of first order R-L Circuit. **(Refer Section-1.26)**
20. Explain the time domain analysis of first order R-C Circuit. **(Refer Section-1.27)**
21. Show that if $\alpha_0$ be the temperature coefficient of resistance at 0°C, the coefficient at $t_1$ °C is given by

$$\alpha_{t_1} = \frac{1}{\frac{1}{\alpha_0} + t_1}$$ **(Refer Section-1.21.1(1))**

Scanned with CamScanner

22. Show that if $\alpha_{t_1}$ is the temperature coefficient of resistance of a conductor at $t_1$ °C, the temperature coefficient of resistant at $t_2$ °C is given by $\alpha_{t_2} = \dfrac{1}{\dfrac{1}{\alpha_{t_1}} + (t_2 + t_1)}$ (Refer Section-1.21.1(2))

## TUTORIAL PROBLEMS

1. Two conductors, one of copper and the other is iron, are connected in parallel and at 20°C carry equal currents. What proportion of current will pass through each if the temperature is raised to 100°C ? For copper $\alpha = 0.0043$ / °C and for iron $\alpha = 0.0063$ / °C. **[52.8%, 47.2%]**

2. A 230 V, 60 W lamp has a filament whose normal working temperature is 2000°C. Find the current, the cold lamp will take when first switched on. Assume that the temperature of the lamp when cold is 20°C and $\alpha$ for the filament is 0.0045 per °C. **[2.58 A]**

3. A lead wire an iron wire are connected in parallel. Their respective specific resistances are in the ratio 49 : 24. The former caries 80 percent more current than the latter and the letter is 47 percent longer than the former. Determine the ratio of their cross sectional areas. **[2.5 : 1]**

4. A piece of silver wire has a resistance of 2 Ω. What will be the resistance of a manganin wire one-third the length and one-third the diameter, if the resistivity of manganin is 30 time that of silver ? **[180 Ω]**

5. A 100 V, 60 W bulb is connected in series with a 100 V, 100 W bulb and the combination is connected across 200 V mains. Find the value of the resistance that should be connected across the first bulb, so that each bulb may get the proper current at the proper voltage. **[250 Ω]**

6. A lamp rated 100 V, 75 W is to be connected across 230 V supply. Find the value of resistance to be connected in series with the lamp. Also find the power loss occurring in that resistance. **[173.3 Ω, 97.48 W]**

7. For the network of Fig. 1.184 determine the current supplied by battery. All resistance are in ohm. **[2 A]**

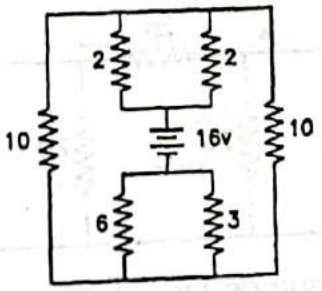


**FIG. 1.184 : REFERENCE FIGURE FOR PROBLEM NO. 7**

8. Find the circuit resistance as seen by the battery of Fig. 1.185. What is the current supplied by the battery ? **[1.5 Ω, 8 A]**

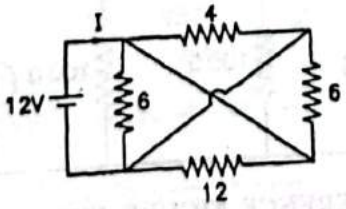


**FIG. 1.185 : REFERENCE FIGURE FOR PROBLEM NO. 8**

Scanned with CamScanner

9. Using delta-star transformation, determine the resistance between the terminals A and B in the given circuit of Fig. 1.186. [23.5]

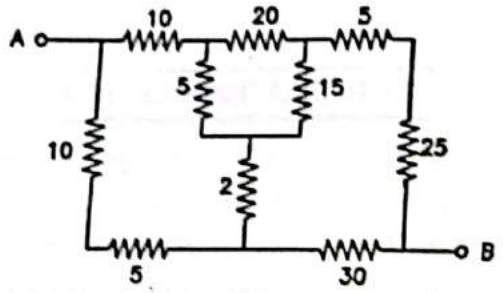


FIG. 1.186 : REFERENCE FIGURE FOR PROBLEM NO. 9

10. Using delta-star transformation, determine the current drawn from, the source in the given circuit of Fig. 1.187. [8.46 A]

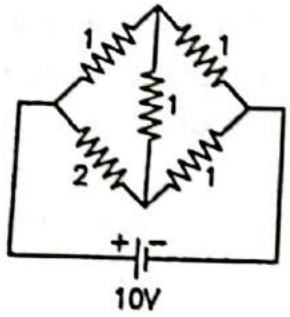


FIG. 1.187 : REFERENCE FIGURE FOR PROBLEM NO. 10

11. Using superposition theorem, determine the current in 4 Ω resistor in the given circuit of Fig. 1.188. [0.66 A from B to A]

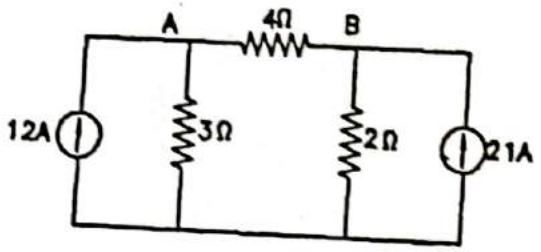


FIG. 1.188 : REFERENCE FIGURE FOR PROBLEM NO. 11

12. Using superposition theorem, calculate the current $I_{AB}$ in the network of Fig. 1.189. [14.5]

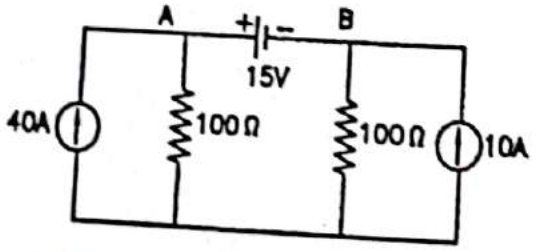


FIG. 1.189 : REFERENCE FIGURE FOR PROBLEM NO. 12

Scanned with CamScanner

13. In the Wheastone bridge shown in Fig. 1.190 the galvanometer of 10 Ω is connected across BD. Using Thevenin's theorem, calculate the current through the galvanometer. [17 mA]

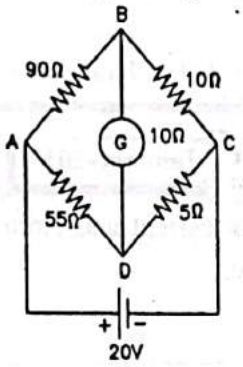


FIG. 1.190 : REFERENCE FIGURE FOR PROBLEM NO. 13

14. Using Thevenin's theorem, calculate the current through 8 Ω resistor in the given network of Fig. 1.191. [0.6 A]

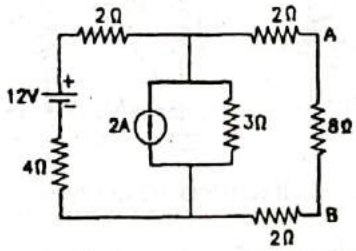


FIG. 1.191 : REFERENCE FIGURE FOR PROBLEM NO. 14

15. Using Thevenin's theorem determine the current through 1 Ω resistor in the network of Fig. 1.192. [2 A, A to B]

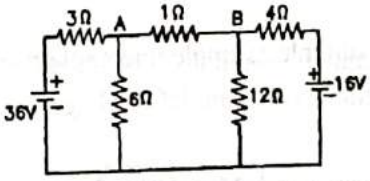


FIG. 1.192 : REFERENCE FIGURE FOR PROBLEM NO. 15

16. Using Norton's theorem, calculate the current through 30 Ω resistor in the given circuit of Fig. 1.193. [2.31 A]

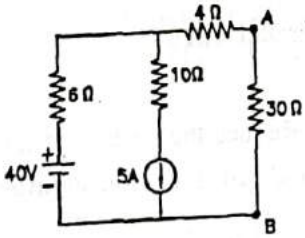


FIG. 1.193 : REFERENCE FIGURE FOR PROBLEM NO. 16

17. Determine the current in 10 Ω resistor in the network of Fig. 1.194 using Thevenin's theorem. [3.98 A]

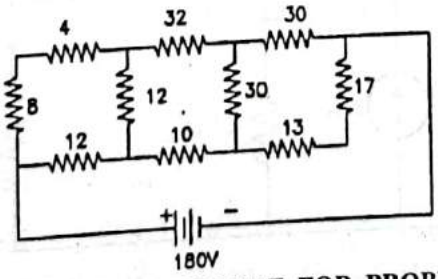


FIG. 1.194 : REFERENCE FIGURE FOR PROBLEM NO. 17

Scanned with CamScanner

## GTU QUESTIONS AND ANSWERS

**Note to the Students :**

- **Below Questions are from previous GTU Examination Papers**

### January-2019

**1.** Obtain the value of Norton's equivalent current and Norton's equivalent resistance for the network shown in the following figure. **7-Marks**

**Ans. : Refer Section-1.40**

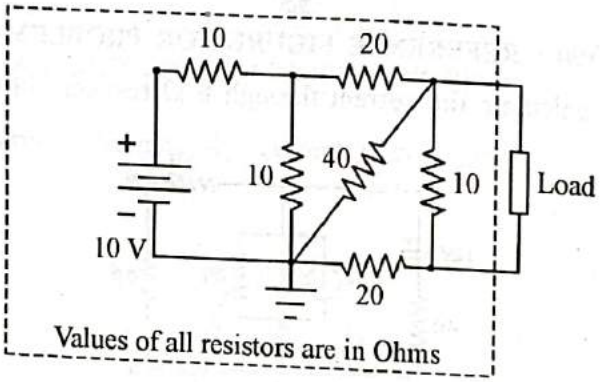


**2.** Derive the equations of capacitor voltage and circuit current in a series R-C circuit connected to a DC supply through a switch. Assume that switch is initially open and it is closed at time t = 0 second. **7-Marks**

**Ans. : Refer Section-1.28**

**3.** Explain Thevenin's theorem. Take suitable example and explain the steps to apply Thevenin's theorem for a resistive circuit with a constant DC voltage source. **7-Marks**

**Ans. : Refer Section-1.24**

### May-2019

**4.** State and explain Kirchoff's voltage and current laws. **3-Marks**

**Ans. : Refer Section-1.19**

**5.** Compare the resistive series and parallel circuit. **4-Marks**

**Ans. : Refer Section-1.15**

**6.** Consider the circuit shown in Figure. Reduce the portion of the circuit to the left of terminals $a-b$ to (a) a Thevenin equivalent and (b) a Norton equivalent. Find the current through R = 16 Ω. **7-Marks**

**Ans. : Refer Section-137 & 1.43**

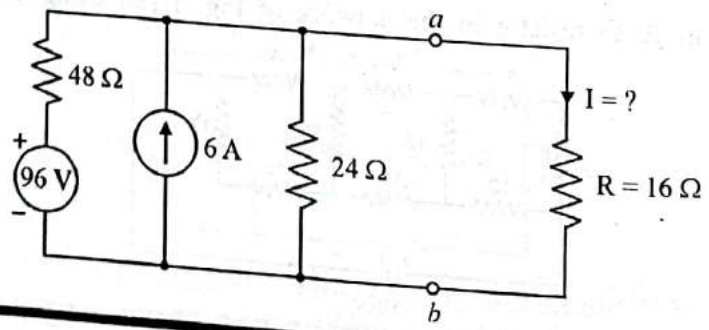


Scanned with CamScanner

**January-2020**

7. State Ohm's law and Kirchhoff's Laws in context with DC circuits. **3-Marks**

**Ans. : Refer Section-1.11 & 1.19**

8. A 100 V, 60 Watt bulb is to be operated from a 220 V supply. What is the resistance to be connected in series with the bulb to glow normally ? **4-Marks**

***Solution :***

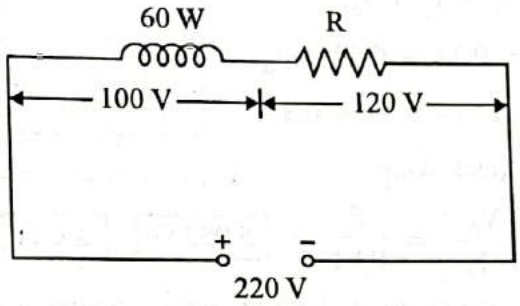


P = 60 W

V = 100 V

Current drawn by camp

Rated current $I = \frac{P}{V} = \frac{60}{100} = 0.6$ A

Lamp will operate on 220 V if the current flowing through it remaing 0.6 A.

Voltage drop cross R is

$V_R = 220 - 100 = 120$ V = IR where, I = 0.6 A

$\therefore \quad R = \frac{V_R}{I} = \frac{120}{0.6} = 200\ \Omega$

**Ans. :** $\boxed{R = 200\ \Omega}$

9. Derive an expression for equivalent resistances of a star connected network to transform into a Delta connected network. **7-Marks**

**Ans. : Refer Section-1.17.2**

10. State Thevenin's and Norton's Theorems. **3-Marks**

**Ans. : Refer Section-1.24 & 1.25**

11. Derive an expression for the voltage across the capacitor during charging through the resistor at any instant $V_C = V(1 - e^{-t/RC})$. Assume that RC series circuit is connected across a DC supply of voltage V. **7-Marks**

**Ans. : Refer Section-1.28**

**December-2020**

12. A resistance of 10 Ω is connected in series with two resistances each of the 15 Ω arranged in parallel. What resistance must be shunted across this parallel combination so that total current taken shall be 1.5 A with 20 V applied ? **3-Marks**

***Solution :***

The circuit connections are shown in figure.

Voltage drop across 10-Ω resistor = 1.5 × 10 = 15 V

Voltage drop across parallel combination, $V_{AB} = 20 - 15 = 5$ V

Scanned with CamScanner

Hence, voltage across each parallel resistance is 5 V.

$$I_1 = \frac{5}{15} = \frac{1}{3} \text{ Amp.} = 0.33 \text{ Amp.}$$

$$I_2 = \frac{5}{15} = \frac{1}{3} \text{ Amp.} = 0.33 \text{ Amp.}$$

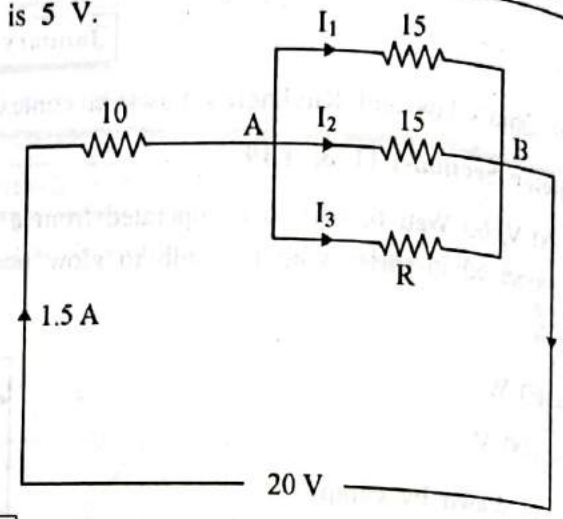


According to KCL

$$I = I_1 + I_2 + I_3$$

$$\therefore \quad 1.5 = 0.33 + 0.33 + I_3$$

$$\therefore \quad I_3 = 1.5 - 0.33 - 0.33$$

$$= 0.84 \text{ Amp.}$$

$$\therefore \quad R = \frac{V_{AB}}{I_3} = \frac{5}{0.84} = \boxed{5.952\,\Omega} \quad \boxed{\cong 6\,\Omega}$$

**13.** State the superposition theorem with suitable example. **4-Marks**

**Ans. : Refer Section-1.23**

**14.** For the Wheatstone bridge diagram shown in figure, obtain the current flowing through the 20 Ω resistance using Thevenin's equivalent network. **7-Marks**

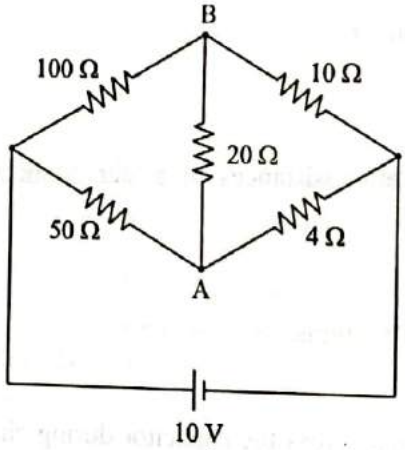


***Solution :***

**Step-1 :** Disconnect the 20 Ω resistor and calculate the voltage across terminal A and B.

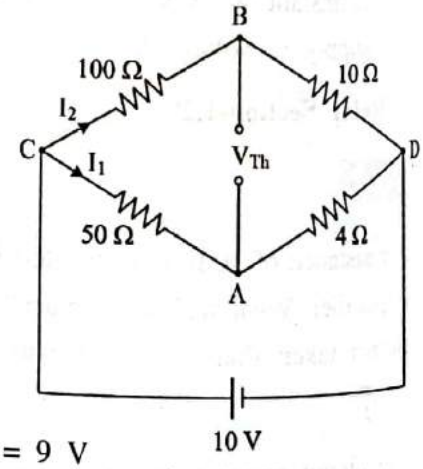


**Step-2 :** Determination of $V_{TH}$

Current in Branch CAD $= \frac{V}{R} = \frac{10}{54} = 1.185$ Amp.

$\therefore$ P.D. between A and C $= V_{AC} = I_1 \times R = 0.185 \times 50$

Current in Branch CBD $= \frac{V}{R} = \frac{10}{110} = 0.09$ Amp.

$\therefore$ P.D. between B and C $= V_{BC} = I_2 \times R = 0.09 \times 100 = 9$ V

P.D. between A and B $= V_{AC} - V_{BC} = 9.25 - 9 = \boxed{0.25}$ (with A +Ve)

$\therefore \quad \boxed{V_{Th} = V_{AB} = 0.25 \text{ V}}$

Scanned with CamScanner

**Step-3 :** Determine of $R_{Th}$

Short the voltage source and calculate the equivalent resistance between A and B.

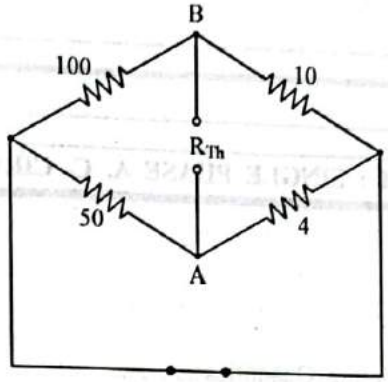


**Voltage source is replaced by short circuit**

The Rearrange the above circuit is

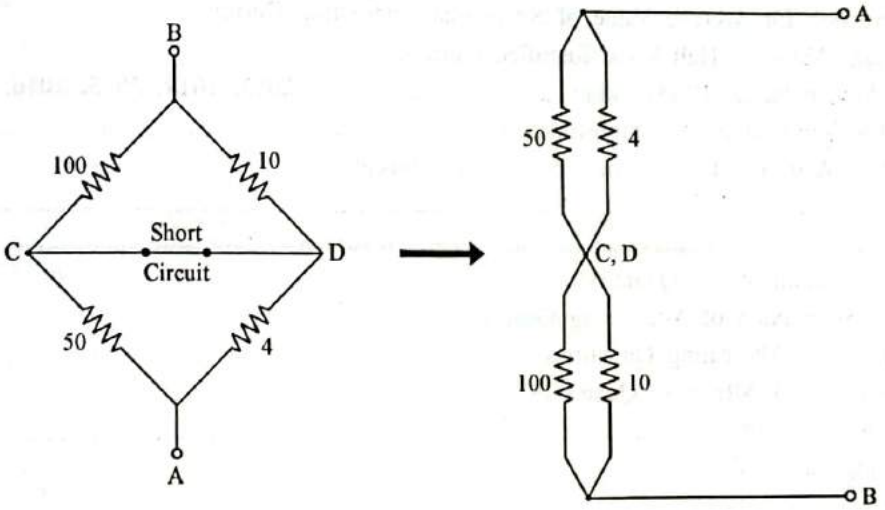


$$R_{Th} = (100 \parallel 10) + (50 \parallel 4) = 9.09 + 3.70 = \boxed{12.79\ \Omega}$$

**Step-4 :** Draw the Thevenin's equivalent circuit

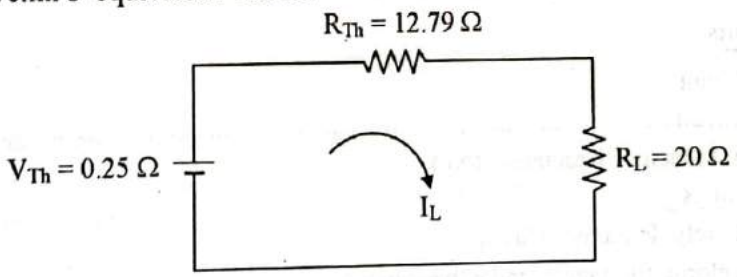


$$\therefore\ I_L = \frac{V_{Th}}{R_{Th} + R_L} = \frac{0.25}{12.79 + 20} = \boxed{0.0076\ \text{Amp.}}$$

**15.** Explain Kirchoff's law for DC series network in brief. **3-Marks**

**Ans. : Refer Section-1.19**

■ ✻ ■

**Note : Also Refer GTU Paper Solutions at the End of the Book**



Scanned with CamScanner

CHAPTER 2

# A. C. Circuits

Contents

## UNIT-I : SINGLE PHASE A. C. CIRCUIT


**A. C. Fundamentals**

2.1 Introduction
2.2 Types of Currents
2.3 Comparison of A.C. with D.C.
2.4 Important Terms Related to Alternating Quantities ..... 2013, 2017, 2019
2.5 Generation of Alternating voltage ..... 2010, 2014
2.6 Equation of alternating voltage (E.M.F.)
2.7 Average Value ..... 2013, 2014, 2015, 2016, 2017, 2018, 2020
2.7.1 Expression for Average Value of Sinusoidal Alternating Current
2.7.2 Average Value of Half-Wave Rectified Current
2.8 Root Mean Square Value (RMS) Value ..... 2013, 2014, 2015, 2016, 2017, 2018, 2020
2.8.1 R.M.S. Value of an a.c. Sinusoidal Wave ..... 2019
2.8.2 R.M.S. Value of Halt Rectified Sinusoidal Current
2.9 Form Factor ..... 2020
2.10 Peak Factor ..... 2020
2.11 Phasor Representation of AC Quantity
2.12 Addition and Subtraction of Alternating Quantities
2.12.1 Addition of Alternating Quantities
4.12.2 Subtraction of Alternting Quantities
2.13 Representation of Phasors ..... 2010
2.13.1 Rectangular Form
2.13.2 Trigonometrical Form
2.13.3 Exponential Form
2.13.4 Polar Form
2.13.5 Transformation of Vector From One Form into other

**Analysis of A. C. Circuits**

2.14 Purely Resistive Circuit
2.15 Purely Inductive Circuit ..... 2013, 2020
2.15.1 Concept of Inductive Reactance ($X_L$)
2.15.2 Definition of $X_L$
2.15.3 Power in Purely Inductive Circuit
2.15.4 Power Waveform for purely inductive circuit
2.15.5 Power Factor
2.16 Purely Capacitive Circuit ..... 2013
2.16.1 Power in Purely Capacitive Circuit
2.16.2 Power Waveform for Purrely Capacitive Circuit
2.16.3 Power Factor

**A. C. Series Circuits**

2.17 R-L Series Circuit
2.18 Active and Reactive Components of Current ..... 2012, 2020




Scanned with CamScanner

2.19 Active. Reactive & Apparent Power ..... 2016, 2019, 2020
2.20 Power Factor in A.C. Circuits ..... 2014, 2015, 2017, 2019
2.21 R-C Series Circuit ..... 2016
2.21.1 Instantaneous Power
2.21.2 Average Power
2.21.3 Power Factor
2.22 R-L-C Series Circuit
2.23 Resonance in R-L-C Series Circuit ..... 2015, 2016, 2017, 2018, 2019
2.24 Q-Factor of a Series Resonant Circuit ..... 2017
2.24.1 Graphic Representation of Series Resonance
2.24.2 Bandwith of Resonant Circuit

**A. C. Parallel Circuits**

2.25 Methods of Solving Parallel Circuits
2.25.1 Phasor Method ..... 2019
2.25.2 Admittance Method
2.25.3 Complex Algebra Method
2.26 Resonance In parallel Circuit ..... 2015
2.27 Comparison Between Series and Parallel Resonance ..... 2014, 2020
* GTU Questions and Answers

## UNIT-II : THREE PHASE A.C. CIRCUIT

**Three Phase A.C. Circuit**

2.28 Generation of Three Phase EMF
2.29 Phase Sequence ..... 2015
2.30 Interconnection of Three Phases
2.31 Star Connection
2.32 Balanced and Unbalanced Loads
2.33 Important Definitions ..... 2015
2.34 Voltage and Current Relationships in Star Connection ..... 2015, 2016, 2020
2.34.1 Power
2.35 Delta Connection ..... 2014, 2016
2.35.1 Voltage and Current Relation in Delta Connected System
2.35.2 Power
2.36 Comparison of Star and Delta Connected System
2.37 Measurement of Power in 3-phase System
2.37.1 One Wattmeter Method
2.37.2 Three Wattmeter Method
2.37.3 Two Wattmeter Method
2.38 Measurement of Power and Power Factor by Two Wattmeter Method ..... 2012, 2013, 2015, 2017, 2018, 2019, 2020
* Exercise

## G.T.U. QUESTION PAPER STATISTICAL ANALYSIS

| | January-2019 | May-2019 | December-2020 |
|---|---|---|---|
| Marks | 31 | 27 | 25 |
| Repeated Questions Marks | 17 | 14 | 18 |

Scanned with CamScanner

# UNIT-I

# SINGLE PHASE A. C. CIRCUIT

## A. C. Fundamentals

### 2.1 INTRODUCTION :

- Electrical energy is used in our homes, offices, shops, factories is in the form of a.c. (alternating currents.)
- In this chapter, we shall study the alternating current (A.C.) fundamentals.

### 2.2 TYPES OF CURRENTS :

- There are three types of current that flows in the electrical circuits.

1. Direct Current or DC
2. Fluctuating Current
3. Alternating Current or AC

### 1. Direct Current or DC :

- The current which always flows in one direction in a circuit is called as direct current.
- Thus the current whose magnitude remains constant with time and flows continuously in a definite direction is called direct current.

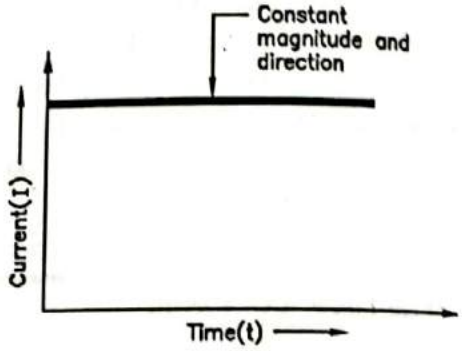


FIG. 2.1 : DC CURRENT

### 2. Fluctuating current :

- If the current generated by devices like rectifier, it will be observed that the direction of current remains constant but the magnitude has small periodic variations with time, Fig. 2.2 such type of current is called fluctuating current.

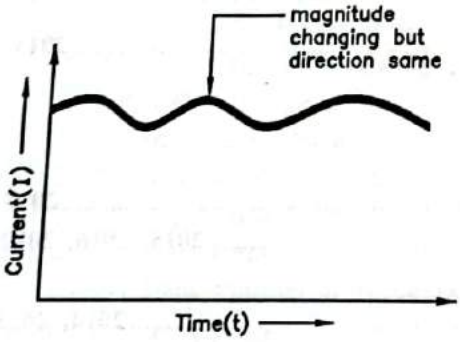


FIG. 2.2 : FLUCTUATING CURRENT

### 3. Alternating current :

- The current which changes its direction and magnitude periodically at regular intervals of time in a circuit is called alternating current.
- For alternating current or voltage the only necessary conditions is the periodic variation with time.
- It can be many forms according to the wave form. Some of the wave forms are as shown in Fig. 2.3.

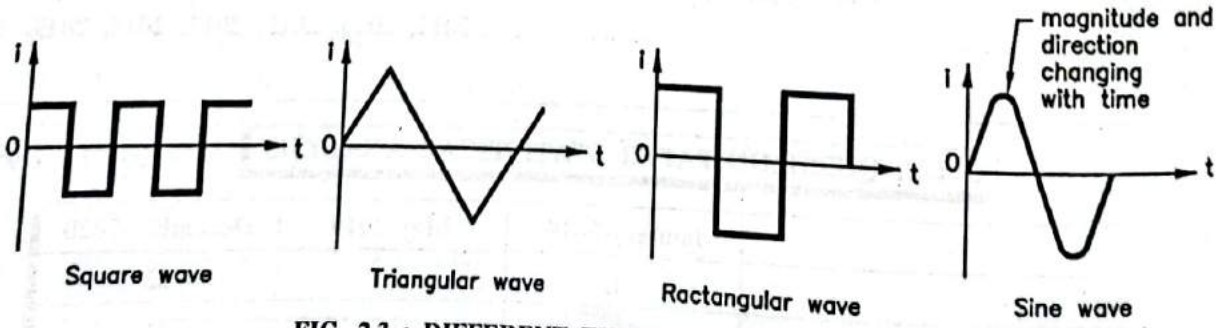


FIG. 2.3 : DIFFERENT TYPES OF WAVE FORMS

Scanned with CamScanner

## 2.3 COMPARISON OF A.C. WITH D.C. :

Table 2.1

| Alternating Current | Direct Current |
|---|---|
| 1. In a.c. voltage and current reverses periodically. | 1. In d.c. voltage, and current remain constant. |
| 2. Low cost of power generation. | 2. Higher cost of power generation. |
| 3. Cost of transmitting A.C. power can be reduced by using step-up transformers. | 3. No such provision can be made. |
| 4. A.C. can be converted into D.C. by using a device, called convertor (rectification circuit). | 4. D.C. can be converted to A.C. by using inverter. |
| 5. A.C. cannot be used directly for electroplating, electrotyping, etc. | 5. D.C. can be used directly for carrying out such operations. |
| 6. A.C. motors and other appliances are more robust and durable. | 6. D.C. motors and appliances are less durable. |

## 2.4 IMPORTANT TERMS RELATED TO ALTERNATING QUANTITIES :

**GTU, May-2009, 2013, 2017; December-2018; January-2019**

**GTU Questions**

1. Define following terms in connection with A.C. wave forms :
   (1) frequency (2) phase and phase difference (3) time period (4) form factor. **[May-2009, 7-Marks]**
2. Define following terms with respect to a.c. waveform.
   (1) Frequency (2) Power factor (3) Amplitude. **[April-2010, 6-Marks]**
3. Define the following terms with respect to AC waveforms :
   (1) Frequency **[December-2010, 4-Marks]**
4. Define : (1) Frequency **[May-2013, 3-Marks]**
5. Define time period and frequency. **[May-2017, 1-Mark]**
6. Define Amplitude, Frequency and Time period for alternating quantities. **[January-2019, 3-Marks]**

### 1. Wave form :

- The shape of the curve obtained by plotting the instantaneous values of alternating quantity along y-axis and time or angle along x-axis is called waveform.
- The waveform of an alternating quantity varying sinusodally is shown in Fig. 2.4.
- The alternating voltage and current may vary in different manner such Sinusoidal wave, sauare wave, Triangular wave, Tapezoidal wave etc Fig.. 2.4.

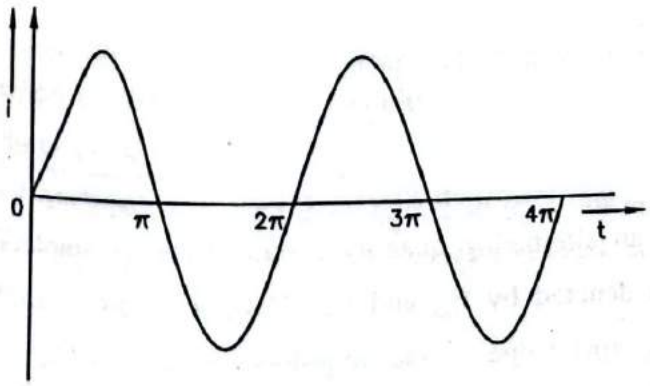


(a) Sinusoidal wave

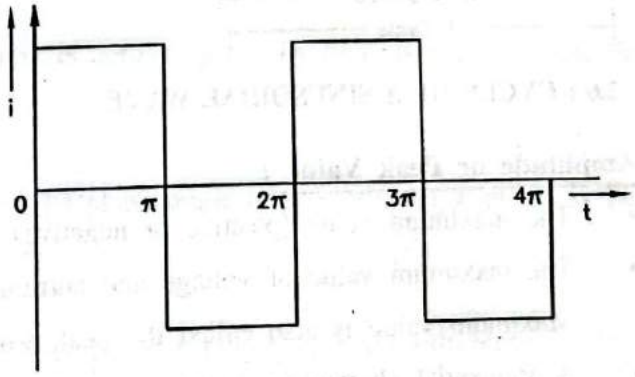


(b) Square wave

Scanned with CamScanner

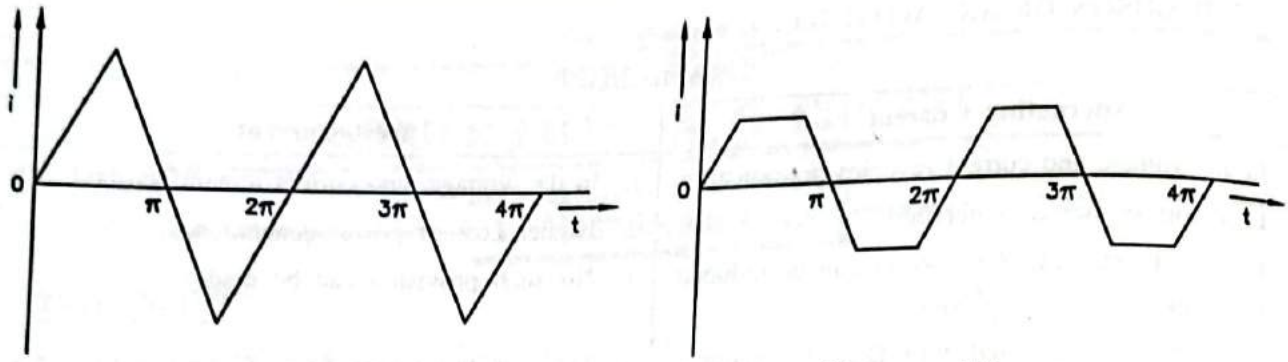


(c) Triangular wave (d) Trapezoidal wave

FIG. 2.4 : DIFFERENT TYPES OF WAVE FORMS

## 2. Instantaneous value :

- The value of an alternating qunatity (voltage current and power etc.) at any instant is called its instantaneous value and is represented by small English letters (i.e. v, i, p, e) respectively.
- The instantaneous values of an alternating quantity can be found either from the curve or from an equation of that alternating quantity.

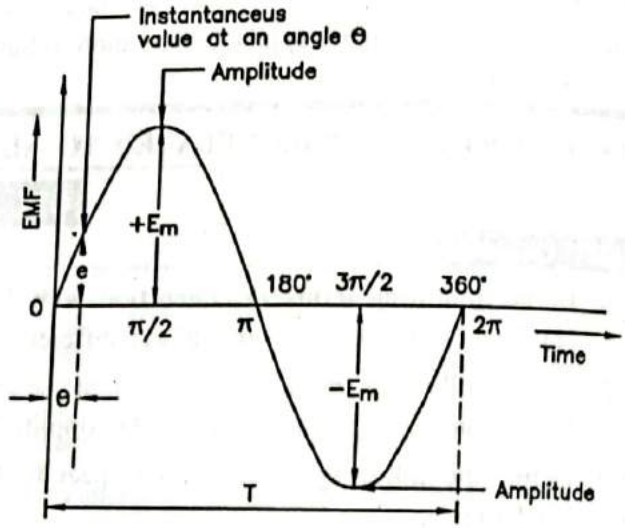


FIG. 2.5 : INSTANTANEOUS VALUE

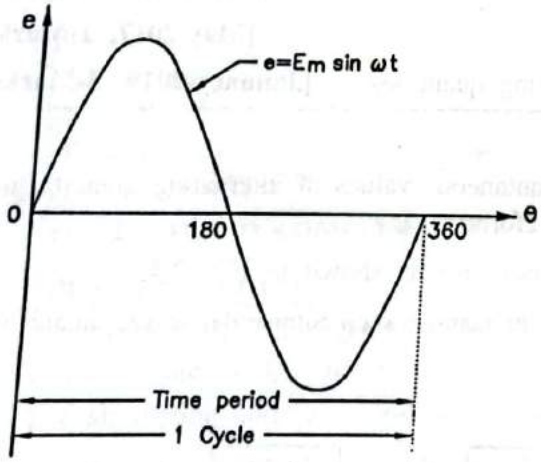


FIG. 2.6 : CYCLE OF A SINUSOIDAL WAVE

## 3. Cycle :

- One complete set of positive and negative values of an alternating quantity is known as cycle,
- A cycle is normally specified in terms of angular measure spread over 360° or 2π radian.

## 4. Amplitude or Peak Value :

- The maximum value (positive or negative) of an alternating quantity is known as its amplitude.
- The maximum value of voltage and current is denoted by $E_m$ and $I_m$. (Ref. Fig. 2.5)
- Maximum value is also called the peak value, crest value or the amplitude.
- A sinusoidal alternating quantity attains its maximum value at 90° and 270° in a cycle.

Scanned with CamScanner

## 5. Time period (Periodic time) : GTU, May-2017

- The time taken by an alternating quantity to complete one cycle is called its time period. It is denoted by T and is expressed in seconds. The relationship between frequency and periodic time (T) is given by

$$T = \frac{1}{f}$$

- For example, a 50 Hz alternating quantity has a time period $\frac{1}{50} = 0.02$ second.

HEINRICH RUDOLF HERTZ (1857-1894)

**Heinrich Rudolf Hertz (1857-1894)**
German physicist who discovered radio waves, and demonstrated that heat waves (infrared) and light are also the part of the electromagnetic spectrum. Hertz also discovered in 1887 that an electric spark occurs more readily when the electrodes are irradiated with ultraviolet light (the Hertz effect), and consequence of the photoelectric effect.

## 6. Frequency : GTU, May-2017

- The number of cycles completed by an alternating quantity per second is known as frequency.
- It is denoted by $f$ and is expressed in hertz (Hz) or cycles/second.
- In a simple 2-pole alternator, one cycle of alternating current or voltage is generated in one revolution. In case of 4 poles, two cycles would have been produced in each revolution. In fact, the frequency of the alternating voltage or current is given by

$$f = \frac{PN}{120}$$

where, $f$ = frequency,
P = No. of poles of the alternator,
N = Speed of the alternator in rpm.

- Standard frequency of generation adopted in India is 50 Hz while in USA, it is 60 Hz.

## 7. Angular frequency (ω) :

- Angular frequency of an alternating quantity is defined as

$$\omega = 2\pi f = \frac{2\pi}{T}$$

where $f$ is the frequency and T is a time period.

## 8. Phase :

- It is defined as the fractional part of the cycle through which the alternating quantity has advanced from the origin (reference point).
- The phase at any instant $t$ from that instant where time is zero, is given by $t/T$, where T be the time period of the alternating quantity.

## 9. Phase angle :

- It is defined as the phase measured in terms of angle. The phase angle at any instant $t$ is given by $2\pi t/T = \omega t$. It is measured in terms of electrical degrees.

## 10. Phase difference :

- The phase difference between two alternating quantities having same frequency is the difference of phases at the maximum or zero or minimum value of the two alternating quantities.

Scanned with CamScanner

(a) Two alternating quantities are called **in phase**, when they attain maximum values or zero values at the same instant. Fig. (2.7).

(b) Two alternating quantities are called out of phase when one alternating quantity attains positive maximum when other quantity attains negative maximum at the same instant. (Fig. 2.8)

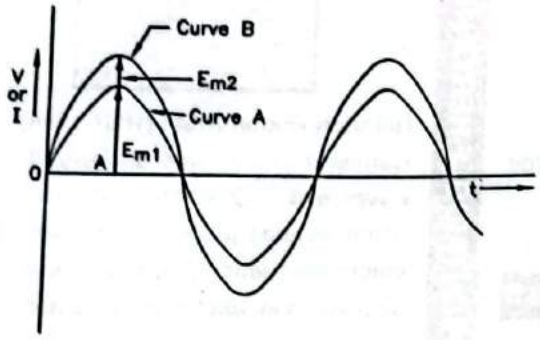


**FIG. 2.7 : ALTERNATING QUANTITIES IN PHASE**

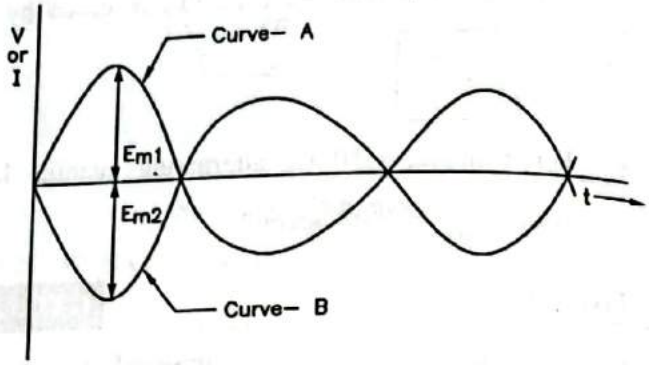


**FIG. 2.8 : ALTERNATING QUANTITIES OUT OF PHASE**

**Syllabus Topic :** Generation of Sinusoidal Votlage

## 2.5 GENERATION OF ALTERNATING VOLTAGE :

**Working principle :**

- When a coil is rotated with a high speed in a uniform magnetic field, the magnetic flux linked with the coil changes continuouly so that an emf is induced in the coil and if the circuit is closed, an induced current flows through the circuit.
- The induced emf and current both are alternating in nature and current changes its direction after every half cycle.

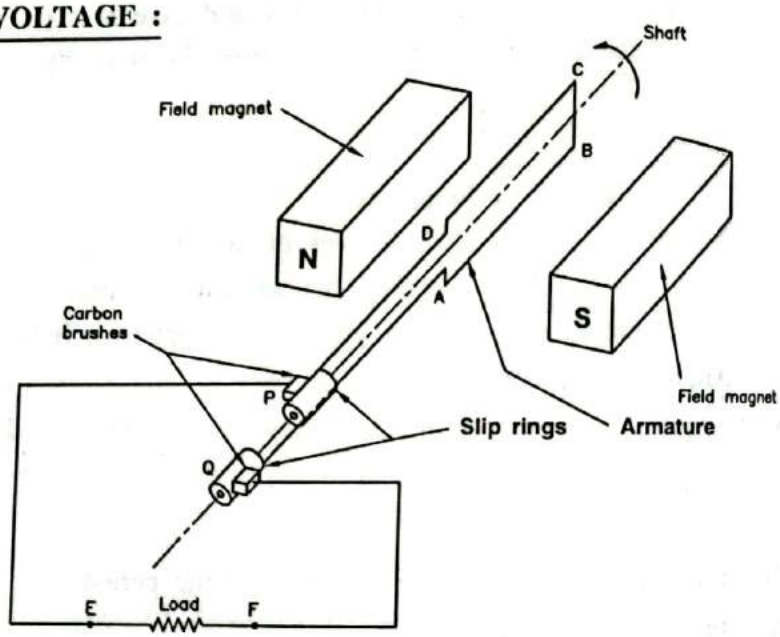


**FIG. 2.9 : THE ELEMENTARY ALTERNATOR WITH TWO POLES**

**Construction :**

- The construction of an ac generation is shown in Fig. (2.9). It has three main parts :

**1. Field magnet :**

- To produce a strong magnetic field a strong magnet of electromagnet is used, which is called field magnet. It is shown by N-S in the figure. N and S represent the two poles of the magnet.
- A horseshoe magnet can be used in small generators but for bigger generators electromagnets are required.

**2. Armature :**

- The armature consists of coil or coils wound on a soft iron laminated core of high permeability.
- The coil is made by winding a large number of turns of insulated copper wire.
- The armature is rotated by a shaft mounted on bearings.

Scanned with CamScanner

### 3. Slip rings and brushes :

- The ends of the coil are connected to two rings of copper P and Q which move along the coil on the same axis without touching each other.
- These rings are called slip rings. Each ring touches a carbon brush. The brushes are supported by a frame and remain stationary. The brushes are connected to the load.
- The induced current flows through these brushes in the load circuit.

**Working :**

- In position (a) the coil is moving parallel to the magnetic lines of force. In this position, the coil is not cutting any lines of force and hence no emf is induced in the coil.
- When the coil rotates by 90° in the anti clockwise direction, it comes to position (b) as shown in the figure. In this position the induced emf is maximum because rate of change of flux is maximum.
- When the coil is further rotated, it will cut progressively fewer lines of force till it reaches position (c) where again the rate of change of flux is zero. Therefore the induced emf in position (c) will be zero.

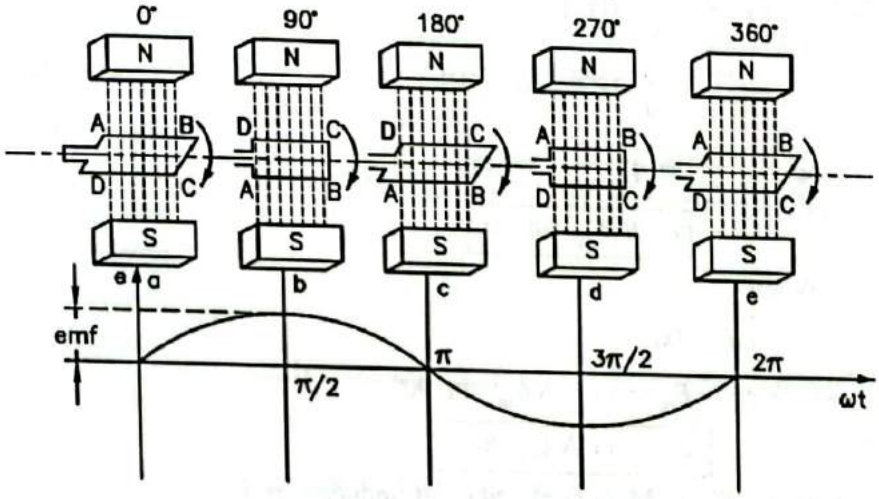


FIG. 2.10 : GENERATION OF AC

- On further rotation by 90°, (i.e. 270°), the induced emf again becomes maximum but the direction is reversed. This is the position (d).
- In position (e), when the conductor has rotated by 360° the induceed emf again becomes zero.
- Various positions and the curve is shown in Fig. 2.10.
- The figure shows the induced emf at different positions of the coil.
- When the coil has rotated from position (a) to the position (e), it has rotated through one complete cycle of 360°. This is known as one cycle of the induced emf.
- One cycle contains two half-cycles known as positive half-cycle and negative half cycle.

**Syllabus Topic :** Representation of Sinusoidal Waveform

## 2.6 EQUATION OF ALTERNATING VOLTAGE (E.M.F.) :

**GTU Questions**

1. Explain the phenomenon of generation of Alternating voltages and currents and derive expression for it with suitable diagrams. **[December-2010, 6-Marks]**
2. Explain how ac sinusoidal emf is generated ? **[December-2014, 3-Marks]**

- Consider a rectangular coil having N turns rotating in a uniform magnetic field, with angular velocity of radian/second about x-axis in its own plane as shown in Fig. 2.11.
- Let $\phi_m$ be the maximum flux perpendicular to the axis of rotation, when the plane of the coil coinsides with the x-axis.



Scanned with CamScanner

- Let in t seconds, the coil rotates angle $\phi = \omega t$ and in this deflected position, the flux perpendicular to the plane of the coil.

$$\boxed{\phi = \phi_m \cos \omega t}$$

- Accordingly to Faraday's Laws of Electromagnetic induction, the instantaneous induced e.m.f. at time when $\theta = \omega t$ is given by

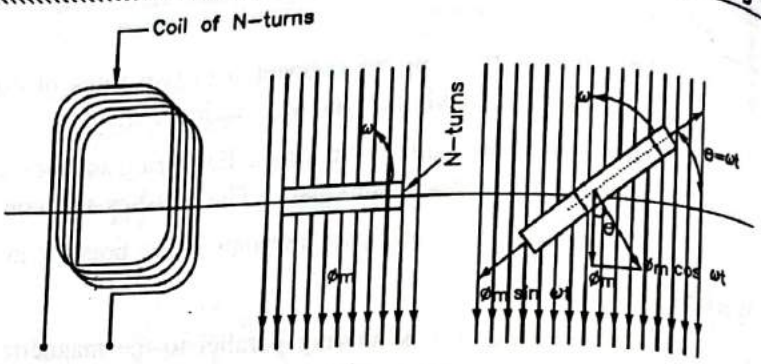


FIG. 2.11

$$e = -\frac{d}{dt}(N\phi)$$

$$= -\frac{d}{dt}(N\phi_m \cos \omega t) \qquad [\because \ \phi = \phi_m \cos \omega t]$$

$$= -N\phi_m \frac{d}{dt} \cos \omega t$$

$$= \boxed{\omega N \phi_m \sin \omega t} \qquad \text{... (1)}$$

When,

$$\omega t = 90^\circ$$

$$\therefore \quad E_m = \omega \cdot N\phi_m \sin 90^\circ$$

$$\therefore \quad \boxed{E_m = \omega N\phi_m \text{ volts}} \qquad \text{... (2)}$$

where $E_m$ = Maximum value of induced emf

From equation (1) and (2), we get

$$\boxed{e = E_m \sin \omega t} \qquad \text{... (3)}$$

- From the above equation, it is clear that the induced e.m.f. varies according to size of angle $\theta = \omega t$.
- The wave shape of the induced e.m.f. is shown in Fig. 2.12. This wave is called sinusoidal voltage wave.
- When $\theta$ varies from $0^0$ to $180^0$, the emf is considered positive and it is negative when $\theta$ varies between $180^0$ and $360^0$. Thus in one cycle of the waveform, there is one positive half-cycle and one negative half-cycle.

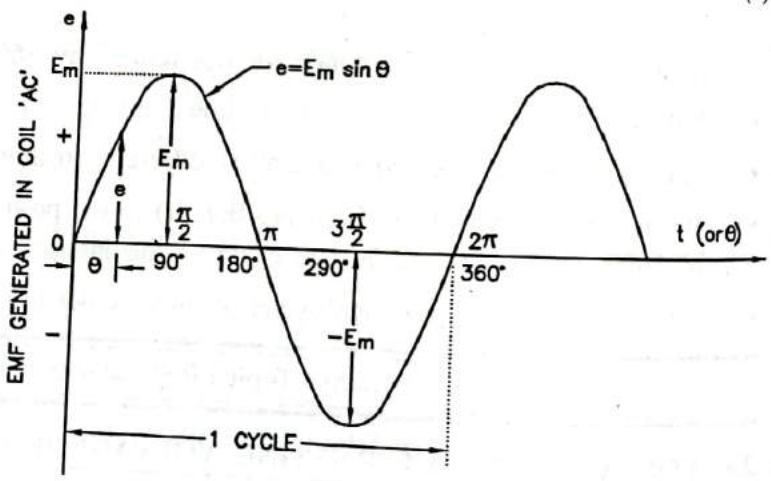


FIG. 2.12 : SINUSOIDAL WAVEFORM OF EMF

**Syllabus Topic :** Average Value

## 2.7 AVERAGE VALUE :

**GTU, May-2013, 2015, 2017, 2018; December-2014, 2016, 2020**

**GTU Questions**

1. Define following terms in connection with A.C. wave forms : Average Value **[May-2009, Dec. 2020]**
2. Define following terms with respect to a.c. waveform : Average value **[April-2010]**

Scanned with CamScanner

3. Define the following terms : (1) RMS value (2) Average value [December-2012]
4. Define average value for alternating circuit. [December-2013]
5. Compare the following term with respect to a.c. waveform : Average value [December-2014]
6. Define the following for AC circuits : Average value [May-2015]
7. Define average value. [May-2016]
8. Define following terms in context with AC circuits :
   (1) Average value of alternating current [December-2016]
9. Determine the average and R.M.S. value of sinusoidal waveforms. [May-2017]
10. Define the following terms : Average value [December-2017]

**Definition :**

- The steady current (d.c.) which flows through a circuit for a given time, transfer same charge as transferred by the alternating current when flows through the same circuit for same time is called average value of the alternating current.
- The average value of voltage and current is denoted by $V_{av}$ or $E_{av}$ and $I_{av}$ respectively.
- Fig. 2.13(a) gives the explanation of average or mean values.

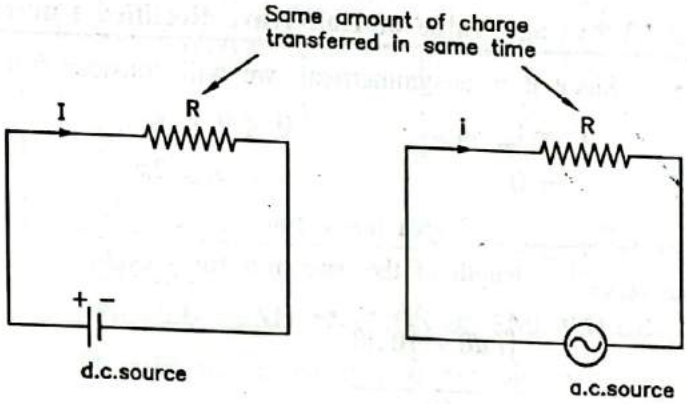


**FIG. 2.13(a) : EXPLANATION OF AVERAGE VALUE**

**Determination of Average Value :**

- The average or mean value of an a.c. quantity over a given interval is the sum of all instantaneous values divided by number of values taken over that interval.

$$\text{Average Value} = \frac{\text{Area under the curve}}{\text{Length of the Base of the curve}}$$

**2.7.1 Expression for Average Value of Sinusoidal Alternating Current :**

- Since it is a symmetrical wave, we can consider only half-cycle.
- Equation of the alternating current is

$$i = I_m \sin \theta$$

By definition

$$I_{av} = \frac{\text{area under half-cycle}}{\text{length of the base over half-cycle}}$$

$$= \frac{\int_0^{\pi} i \, d\theta}{\pi}$$

$$= \frac{1}{\pi}\int_0^{\pi} I_m \sin \theta \, d\theta \qquad [\because i = I_m \sin \theta]$$

$$= \frac{I_m}{\pi}\int_0^{\pi} \sin\theta \, d\theta$$

$$= \frac{I_m}{\pi}\left[-\cos \theta\right]_0^{\pi}$$

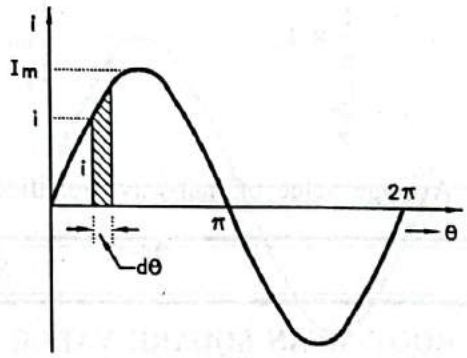


**FIG. 2.13(b) : SINUSOIDAL WAVEFORM**

Scanned with CamScanner

$$= \frac{-I_m}{\pi}[\cos\pi - \cos 0]$$

$$= \frac{-I_m}{\pi}[-1-1]$$

$$= \frac{2I_m}{\pi}$$

$$= \frac{I_m}{\frac{\pi}{2}}$$

$$= \boxed{0.637\ I_m}$$

### 2.7.2 Average Value of Half-Wave Rectified Current :

- Since it is unsymmetrical, we will consider full cycle. Therefore,

$$i = I_m \sin\theta \qquad 0 \le \theta \le \pi$$
$$= 0 \qquad \pi \le \theta \le 2\pi$$

$$I_{av} = \frac{\text{area under full} - \text{cycle}}{\text{length of the base over full} - \text{cycle}}$$

$$= \frac{\int_0^{\pi} i\, d\theta + \int_{\pi}^{2\pi} 0\, d\theta}{2\pi}$$

$$= \frac{1}{2\pi}\int_0^{\pi} I_m \sin\theta\, d\theta$$

$$= \frac{I_m}{2\pi}[-\cos\theta]_0^{\pi}$$

$$= \frac{-I_m}{\pi}[\cos\pi - \cos 0]$$

$$= \frac{-I_m}{2\pi}[-1-1] = \frac{I_m}{\pi}$$

$$= \frac{I_m}{\pi}$$

$$= \frac{1}{\pi} \times I_m$$

$$= \frac{I_m}{\pi}$$

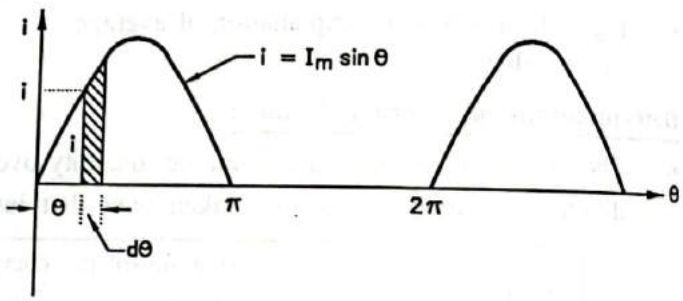


FIG. 2.13(c) : WAVE FORM OF HALF-WAVE RECTIFIED CURRENT

- Average value of half-wave rectified current $= \frac{1}{\pi} \times$ maximum value of the current

**Syllabus Topic :** RMS Value

## 2.8 ROOT MEAN SQUARE VALUE (RMS) VALUE :

**GTU, May-2015, 2016, 2017, 2018; December-2013, 2014, 2016, 2020**

**GTU Questions**

1. Define following terms in connection with A.C. wave forms : R.M.S. value **[May-2009, Dec. 2020]**
2. Define following terms with respect to a.c. waveform : R.M.S. value **[April-2010]**

Scanned with CamScanner

3. Define the following terms : R.M.S. value [December-2012]
4. Define rms value for alternating circuit. [December-2013]
5. Compare the following term with respect to a.c. waveforms : R.M.S. value [December-2014]
6. Define the following for A.C. circuits : (1) R.M.S. value (2) Average value [May-2015]
7. Define R.M.S. value. [May-2016]
8. Define following terms in context with A.C. circuits : R.M.S. value of alternating current [December-2016]
9. Determine the average and R.M.S. value of sinusoidal waveform. [May-2017]
10. Define the following terms : R.M.S. value [December-2017]

**Definition :**

- It is steady current (d.c.) which flows through a given circuit (i.e. resistor) for a given time which produces the same amount of heat as produced by the alternating current when flows through the same resistor for the same time is called r.m.s. value of alternating current.
- The r.m.s. values are denoted by capitals without any suffix. For example $I_{r.m.s.} = I$ and $V_{r.m.s.} = V$

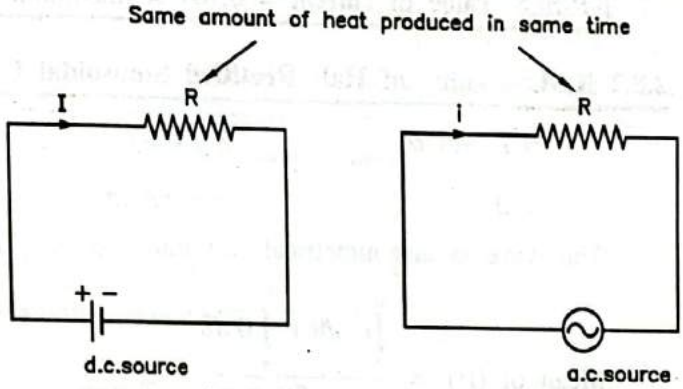


FIG. 2.14 : EXPLANATION OF RMS VALUE

- These values are commonly used in practice. Fig. 2.14 gives the explanation of r.m.s. value.

### 2.8.1 R.M.S. Value of an a.c. Sinusoidal Wave : GTU, May-2019

**GTU Questions**

1. For A.C. sinusoidal current prove that $I_{rms} = 0.707\ I_m$. [May-2009, 3-Marks]

The expression of sinusoidal alternating current is

$$i = I_m \sin \omega t$$
$$= I_m \sin \theta$$

- The mean of the squares of the instantaneous values of current over one complete cycle is given by

$$(\text{mean of } i^2) = \int_0^{2\pi} \frac{i^2\, d\theta}{2\pi}$$
$$= \int_0^{2\pi} \frac{(I_m \sin\theta)^2}{2\pi}\, d\theta$$
$$= \frac{I_m^2}{2\pi} \int_0^{2\pi} \sin^2\theta\, d\theta$$
$$= \frac{I_m^2}{2\pi} \int_0^{2\pi} \left(\frac{1-\cos 2\theta}{2}\right) d\theta$$
$$= \frac{I_m^2}{4\pi} \left[\theta - \frac{\sin 2\theta}{2}\right]_0^{2\pi}$$
$$= \frac{I_m^2}{4\pi} [2\pi - 0]$$
$$= \frac{I_m^2}{2}$$

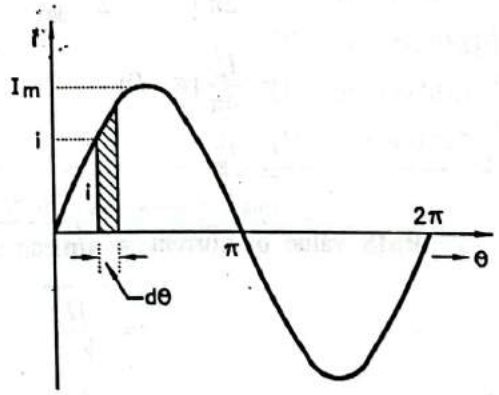


FIG. 2.15 : SINUSOIDAL WAVEFORM

Scanned with CamScanner

The r.m.s. value of the alternating current = $\sqrt{\text{mean of the squares of the instantaneous values of currents}}$

$$= \sqrt{\frac{I_m^2}{2}}$$

$$= \frac{I_m}{\sqrt{2}}$$

$$= \boxed{0.707\ I_m}$$

**R.M.S. value of current = 0.707 × maximum value of current**

### 2.8.2 R.M.S. Value of Half Rectified Sinusoidal Current :

$$i = I_m \sin\theta \qquad 0 \le \theta \le \pi \qquad \text{... (i)}$$

$$= 0 \qquad \pi \le \theta \le 2\pi \qquad \text{... (ii)}$$

The wave is unsymmetrical, we must consider full-cycle. (Refer Fig. 2.13(c))

$$\text{Mean of } (i^2) = \frac{\int_2^{\pi} i^2\, d\theta + \int_{\pi}^{2\pi} 0\, d\theta}{2\pi}$$

$$= \frac{1}{2\pi}\int_2^{\pi} i^2\, d\theta$$

$$= \frac{1}{2\pi}\int_2^{\pi} (I_m \sin\theta)^2\, d\theta \qquad [\because\ i = I_m \sin\theta]$$

$$= \frac{I_m^2}{2\pi}\int_2^{\pi} \sin^2\theta\, d\theta$$

$$= \frac{I_m^2}{2\pi}\int_2^{\pi}\left(\frac{1-\cos 2\theta}{2}\right) d\theta$$

$$= \frac{I_m^2}{2\pi}\left[\theta - \frac{\sin 2\theta}{2}\right]_0^{\pi}$$

$$= \frac{I_m^2}{4\pi}[\pi - 0]$$

$$= \frac{I_m^2}{4}$$

$$\therefore \text{ RMS value of current} = \sqrt{\text{mean of } (i^2)}$$

$$= \sqrt{\frac{I_m^2}{4}}$$

$$= \frac{I_m}{2}$$

$$\boxed{I = 0.5 \times I_m}$$

**∴ RMS value of current for half-wave rectified wave = 0.5 × maximum value of current.**

Scanned with CamScanner

## 2.9 FORM FACTOR :

**GTU, May-2009, 2010; Dec. 2008, 2010, 2012, 2014, 2015, 2016, 2020**

**GTU Questions**

1. Define : Form factor **[December-2008, 2020]**
2. Define following terms in connection with A.C. waveforms : Form factor **[May-2009]**
3. Define following terms with respect to a.c. waveform : Form factor **[April-2010]**
4. Define the following terms with respect to A.C. waveform : Form factor **[December-2010]**
5. Define the following terms : Form factor **[December-2012]**
6. Compare the following term with respect to a.c. waveform : Form factor **[December-2014]**
7. Define the following A.C. circuits : Form factor **[December-2015]**
8. Define form factor in context with A.C. circuits. **[December-2016, 2020]**

- It is defined as the ratio of r.m.s. value to average value of an alternating quantity.
- Mathematically,

$$\text{Form factor } (K_f) = \frac{\text{r.m.s. value of an alternating quantity}}{\text{average value of an alternating quantity}}$$

In case of sinusoidal alternating current,

$$\text{r.m.s. value} = \frac{\text{Maximum value}}{\sqrt{2}}$$

$$= 0.707 \times I_m$$

$$\text{and average value} = 0.637\ I_m$$

$$\therefore \quad \text{Form factor} = \frac{0.707 \times I_m}{0.637 \times I_{m1}}$$

$$= \boxed{1.11}$$

## 2.10 PEAK FACTOR :

**GTU, December-2008, 2012, 2015, 2017, 2020**

**GTU Questions**

1. Define : Peak factor, Obtain the rms value and average value of half wave rectified sinusoidal voltage wave. **[December-2008]**
2. Define the following terms : Peak factor regarding a.c. quantity **[December-2012]**
3. Define following for A.C. circuits : Peak factor **[December-2015]**
4. Define the following terms : Crest factor **[December-2017]**

- It is defined as the ratio of maximum value to r.m.s. value of the alternating quantity.
- Mathematically,

$$\text{Peak factor } (k_p) = \frac{\text{Maximum value of alternating quantity}}{\text{r.m.s. value of alternating quantity}}$$

- For sinusoidal alternating current,

$$\text{Peak factor} = \frac{I_m}{I_m / \sqrt{2}}$$

$$= \sqrt{2}$$

$$= \boxed{1.414}$$

Scanned with CamScanner

**Example-2.1 :**

**An alternating emf is represented by e = 200 sin 2π 50t. Find (1) maximum value (2) frequency (3) time period (4) angular frequency.**

***Solution :***

The given equation is $e = 200 \sin 2\pi\ 50\ t$.

Now, Comparing this equation with $e = E_m \sin \omega t$

**(1) To find maximum value :**

The maximum value, $E_m = \boxed{200\ \text{V}}$ ... (i)

**(2) To find frequency**

Frequency is $f = \boxed{50\ \text{Hz}}$ ... (ii)

**(3) To find Time period**

Time period $T = \frac{1}{f} = \frac{1}{50} = \boxed{0.02\ \text{second}}$ ... (iii)

**(4) To find Angular frequency**

Angular frequency $\omega = 2\pi f$

$= 2\pi\ 50$

$= \boxed{314.2\ \text{rad/sec.}}$ ... (iv)

**Example-2.2 :**

**RMS value of an alternating current is 30 A and its frequency is 25 Hz. Write its equation to find its instantaneous value. Calculate also (1) its average value and (2) time period.**

***Solution :***

$I = 30\ \text{A}$

$f = 25\ \text{Hz}$

$I_m = \sqrt{2} \times I = \sqrt{2} \times 30 = 42.43\ \text{A}$

The instantaneous value of the current

$\therefore \quad i = I_m \sin \omega t$

$\therefore \quad i = I_m \sin 2\pi f\ t \qquad [\because\ \omega = 2\pi f]$

$\therefore \quad i = 42.43 \sin 2\pi \times 25\ t$

$\boxed{i = 42.43 \sin 50\pi\ t}$

**(1) Average value,** $I_{av} = 0.637\ I_m$

$= 0.637 \times 42.43$

$= \boxed{27\ \text{A}}$

**(2) Time period,** $T = \frac{1}{f} = \frac{1}{25}$

$= \boxed{0.04\ \text{sec}}$

Scanned with CamScanner

**Example-2.3 :**

**A sinusoidal alternating current is expressed by $i = 100 \sin 377\ t$. Calculate (1) RMS value (2) Average value and (3) Frequency.**

***Solution :***

The given equation is $i = 100 \sin 377\ t$,

Now, comparing this equation with $i = I_m \sin \omega t$, we get

$I_m = 100$ A, $\omega = 377$ rad/sec

**(1) To Find RMS Value :**

$$I_{RMS} = \frac{I_m}{\sqrt{2}}$$

$$= \frac{100}{\sqrt{2}}$$

$$= \boxed{70.7 \text{ A}}$$

**(2) To Find Average Value :**

Average value $I_{av} = I_m \times 0.637$

$$= 100 \times 0.637$$

$$= \boxed{63.7 \text{ A}}$$

**(2) To Find Frequency :**

$\omega = 377$

$\therefore \quad 2\pi f = 377$

$$\therefore \quad f = \frac{377}{2\pi}$$

$$= \boxed{60 \text{ Hz}}$$

**Example-2.4 :**

**An alternating current is having an equation $I = 141.4 \sin 314\ t$. Find : (1) Frequency (2) R.M.S. value of I (3) Average value of $I$ (4) Instantaneous value of current when $t = 2$ ms.** **GTU, June-2011**

***Solution :***

The given equation is $I = 141.4 \sin 314\ t$

Now comparing this equatin with $i = I_m \sin \omega t$, we get

$\therefore \quad \omega = 314 = 2\pi f$

$$\therefore \quad \text{Frequency, } f = \frac{314}{2\pi}$$

$$= \frac{314}{2 \times 3.14}$$

$$= \boxed{50 \text{ Hz}}$$

$I_m = 141.4$ A



Scanned with CamScanner

**(1) To Find RMS Value :**

r.m.s. values of $I = \frac{I_m}{\sqrt{2}}$

$$= \frac{141.4}{\sqrt{2}}$$

$$= \boxed{100 \text{ A}}$$

**(2) To Find Average Value :**

Average value of $I = 0.637\ I_m$

$$= (0.637)\ (141.4)$$

$$= \boxed{90 \text{ A}}$$

**(2) To Find Instantaneous Value :**

Instantaneous value of I at $t = 2$ ms $= 2 \times 10^{-3}$ sec

$$i = 141.4 \sin (314)\ (2 \times 10^{-3})$$

$$= \boxed{83 \text{ A}}$$

**Example-2.5 :**

**A certain waveform has a form factor of 1.2 and a peak factor of 1.5. If the maximum value is 100, find rms value and average value.** **GTU, December-2008**

***Solution :***

**Given data :**

Form factor = 1.2

Peak factor = 1.5

Max. Value = 100

**(1) To Find RMS Value :**

$$\text{Peak factor} = \frac{\text{Maximum value}}{\text{r.m.s. value}}$$

$$\therefore \quad \text{r.m.s. value} = \frac{\text{Maximum value}}{\text{Peak factor}}$$

$$= \frac{100}{1.5}$$

$$= \boxed{66.67}$$

**(2) To Find Average Value :**

$$\text{Form factor} = \frac{\text{r.m.s. value}}{\text{Average value}}$$

$$\therefore \quad \text{Average value} = \frac{\text{r.m.s. value}}{\text{Form factor}}$$

$$= \frac{66.67}{1.2}$$

$$= \boxed{55.55}$$

Scanned with CamScanner

**Example-2.6 :**

**An alternating current varying sinusoidally with a freq. of 50 c/s. has a r.m.s. value of 30 A. Write down the equation for the instantaneous value and find this value at (i) 0.0025 sec. (ii) 0.0125 sec. after passing through a positive max. value. (iii) At what time measured from a positive maximum value will the instantaneous value of current be 21.2 Amp.**

**GTU, September-2009**

***Solution :***

$f = 50$ Hz

$\therefore \omega = 2\pi f$

$= 2 \times \pi \times 50$

$= 100\ \pi$

$= 314$ rad/sec

$I = 30$ A

$I_{max} = \sqrt{2} \times 30$

$= 42.42$ A

Equation for instantaneous value, $i = I_m \sin \omega t$

$= 42.42 \sin 100\ \pi t$

$= \boxed{42.42 \sin (100\ \pi) t}$ ... (1)

**(i) To find equation for instantaneous value at 0.0025 sec**

Periodic time $T = \dfrac{1}{f} = \dfrac{1}{50}$ sec

Positive maximum occurs at $t = \dfrac{T}{4} = \dfrac{1}{4 \times 50} = \dfrac{1}{200}$ sec

$= 5 \times 10^{-3}$ sec

Instantaneous value is required at $t = \dfrac{T}{4} + 0.0025$

$= 5 \times 10^{-3} + 2.5 \times 10^{-3}$

$= 7.5 \times 10^{-3}$ sec

$\therefore \quad i = 42.42 \sin (100\ \pi)\ t$

$= 42.42 \sin (100 \times 180 \times 7.5 \times 10^{-3})°$

$= 42.42 \sin (135)°$

$= \boxed{30 \text{ A}}$

**(ii) To find instantanious value at 0.0125 sec**

$t = \dfrac{T}{4} + 0.0125$

$= 5 \times 10^{-3} + 12.5 \times 10^{-3}$

$= 17.5 \times 10^{-3}$

$i = 42.42 \sin (100\ \pi)\ t$

$= 42.42 \sin (100 \times 180 \times 17.5 \times 10^{-3})°$

$= 42.42 \sin (315)°$

$= \boxed{-30 \text{ A}}$

Scanned with CamScanner

**(iii) When the time is measured from positive maximum value, the equation can be written as**

$$i = 42.42 \cos (100\pi)t$$

Now when $i = 21.2$

$$\therefore \quad 21.2 = 42.42 \cos (100\pi t)$$

$$\therefore \quad \cos (100\pi t) = 0.5$$

$$(100 \times 180 \times t)^\circ = 60^\circ$$

$$\therefore \quad t = \frac{60}{100 \times 180}$$

$$= \frac{1}{300} \text{ sec}$$

$$= \boxed{3.33 \times 10^{-3} \text{ sec}}$$

**Example-2.7 :**

**Obtain (1) form factor and (2) peak factor of a half wave rectified sine wave.**

**GTU, December-2008**

***Solution :***

**(1) To Find R.M.S. value :**

The instantaneous value of sinusoidal current is given by

$$i = I_m \sin\theta \qquad 0 \le \theta \le \pi$$

$$= 0 \qquad 0 \le \theta \le 2\pi$$

$$\text{Mean of } (i^2) = \frac{1}{2\pi}\left[\int_0^{\pi} i^2\, d\theta + \int_{\pi}^{2\pi} 0 \times d\theta\right]$$

$$= \frac{1}{2\pi}\int_0^{\pi} (I_m \sin\theta)^2\, d\theta$$

$$= \frac{I_m^2}{2\pi}\int_0^{\pi} \sin^2\theta\, d\theta$$

$$= \frac{I_m^2}{2\pi}\int_0^{\pi} \frac{(1-\cos 2\theta)}{2}\, d\theta$$

$$= \frac{I_m^2}{4\pi}\left[\theta - \frac{\sin 2\theta}{2}\right]_0^{\pi}$$

$$= \frac{I_m^2}{4\pi}[\pi]$$

$$= \frac{I_m^2}{4}$$

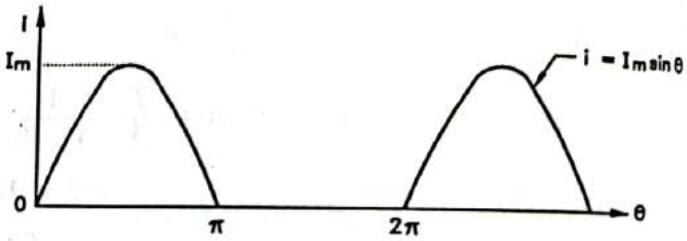


**FIG. 2.16**

$$\text{R.M.S. value of current, } I = \sqrt{\text{mean of } (i^2)}$$

$$= \sqrt{\frac{I_m^2}{4}} = \frac{I_m}{2} \qquad \text{... (i)}$$

**(2) To Find Average value :**

Half-wave rectified sine wave is an unsymmetrical wave.

$$\therefore \quad \text{Average value} = \frac{\text{area under the curve for one cycle}}{\text{length of the base}}$$

Scanned with CamScanner

Area under the curve for one cycle $= \int_0^{\pi} i\, d\theta + \int_{\pi}^{2\pi} 0 \times d\theta$

$$= \int_0^{\pi} I_m \sin\theta\, d\theta$$

$$= I_m \left[-\cos\theta\right]_0^{\pi}$$

$$= -I_m \left[\cos\pi - \cos 0\right]$$

$$= 2\, I_m$$

Length of the base $= 2\pi$

$\therefore$ average value, $I_{av} = \dfrac{2I_m}{2\pi} = \dfrac{I_m}{\pi}$ ... (ii)

**Form factor,** $K_f = \dfrac{\text{R.M.S. value}}{\text{Average value}}$

$$= \frac{\frac{I_m}{2}}{\frac{I_m}{\pi}}$$

$$= \frac{\pi}{2}$$

$$= 1.57$$

**Peak factor,** $K_p = \dfrac{\text{Peak value}}{\text{R.M.S. value}}$

$$= \frac{I_m}{I_m/2}$$

$$= \boxed{2}$$

**Example-2.8 :**

**Calculate the RMS value and average value of the voltage wave as shown in Fig. 2.17. Also calculate form factor and peak factor.** **GTU, June-2012**

***Solution :***

The voltage varies according to straight line AB. The equation is given by the equation of straight line $y = mx + c$

Where $m = \dfrac{2-1}{2\pi - 0} = \dfrac{1}{2\pi}$ and $c = 1$

$\therefore \quad v = \dfrac{1}{2\pi}\theta + 1$

$v = 1 + \dfrac{\theta}{2\pi} \qquad 0 \le \theta \le 2\pi$ ... (i)

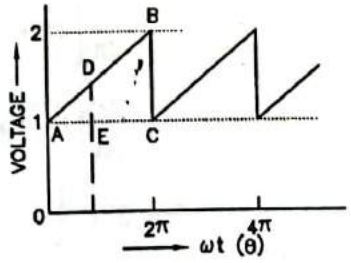


**FIG. 2.17 : WAVEFORM FOR EXAMPLE 2.8**

**(I) To Find Average Value :**

Average value $V_{av} = \dfrac{\text{Area under the curve over full-cycle}}{\text{base over full-cycle}}$

$$= \frac{\int_0^{2\pi} v\, d\theta}{2\pi}$$

Scanned with CamScanner

From equation (i)

$$= \frac{1}{2\pi}\int_0^{2\pi}\left(1+\frac{\theta}{2\pi}\right)d\theta$$

$$= \frac{1}{2\pi}\left[\theta+\frac{\theta^2}{4\pi}\right]_0^{2\pi}$$

$$= \frac{1}{2\pi}\left[2\pi+\frac{4\pi^2}{4\pi}\right]$$

$$= \frac{1}{2\pi}[2\pi+\pi]$$

$$= \frac{3\pi}{2\pi}$$

$$= \boxed{1.5\ \text{V}}$$

**(2) To Find R.M.S. value :**

$$(\text{mean value})^2 = \frac{\text{Area under the squared curve for one-cycle}}{\text{Base over full-cycle}}$$

$$\text{mean of } (v^2) = \frac{\int_0^{2\pi} v^2\, d\theta}{2\pi}$$

$$= \frac{1}{2\pi}\int_0^{2\pi}\left(1+\frac{\theta}{2\pi}\right)^2 d\theta$$

$$= \frac{1}{2\pi}\int_0^{2\pi}\left(1+\frac{\theta}{\pi}+\frac{\theta^2}{4\pi^2}\right)d\theta$$

$$= \frac{1}{2\pi}\left(\theta+\frac{\theta^2}{2\pi}+\frac{\theta^3}{12\pi^2}\right)_0^{2\pi}$$

$$= \frac{1}{2\pi}\left[2\pi+\frac{4\pi^2}{2\pi}+\frac{8\pi^3}{12\pi^2}\right]$$

$$= \frac{1}{2\pi}\left[2\pi+2\pi+\frac{2\pi}{3}\right]$$

$$= \frac{2\pi}{2\pi}\left(1+1+\frac{1}{3}\right)$$

$$= 2+\frac{1}{3}$$

$$= \frac{7}{3}$$

$$\text{RMS value} = \sqrt{\text{mean of } (v^2)} = \sqrt{\frac{7}{3}} = \boxed{1.527\ \text{V}}$$

Scanned with CamScanner

$$\text{Form factor, } K_f = \frac{\text{r.m.s. value}}{\text{average value}}$$

$$= \frac{1.527}{1.5}$$

$$= \boxed{1.018}$$

$$\text{Peak factor, } K_p = \frac{\text{maximum value}}{\text{r.m.s. value}}$$

$$= \frac{2}{1.527}$$

$$= \boxed{1.31}$$

**Example-2.8.1 :**

**The maximum values of voltage and current in a circuit are 400 V and 20 A respectively. Both the quantities are sinusoidal with 50 Hz frequency. The instantaneous values of voltage and current at time t = 0 second are 283 V and 10 A respectively (both increasing and positive). Obtain the equations of voltage and current in this circuit at time 't' second. Also find out the active power consumption in the circuit.**

**GTU, January-2019**

*Solution :*

Give data

$V_m = 400$ V

$I_m = 20$ A

$f = 50$ Hz

$\therefore \omega = 2\pi f = 2\pi \times 50 = 314$ rad/sec.

**(1) To obtain the equations of voltage and current at '$t$' second :**

$$V_{(t)} = V_m \sin(\omega t + \theta_1)$$

$$= 400 \sin(314t + \theta_1) \quad \text{... (1)}$$

$$I_{(t)} = I_m \sin(\omega t + \theta_2)$$

$$= 20 \sin(314t + \theta_2) \quad \text{... (2)}$$

It is given that at $t = 0$, $V_{(t)} = 283$ V and $I_{(t)} = 10$ A

$\therefore$ Substitute the above values in equation (1) and (2), we get

$$283 = 400 \sin(314(0) + \theta_1)$$

$$\therefore 283 = 400 \sin\theta_1$$

$$\therefore \sin\theta_1 = \frac{283}{400} = 0.707$$

$$\therefore \theta_1 = \sin^{-1}(0.707) = 45° \quad \text{... (3)}$$

$$10 = 20 \sin(314(0) + \theta_2)$$

$$\therefore 10 = 20 \sin\theta_2$$

$$\therefore \sin\theta_2 = \frac{10}{20} = 0.5$$

$$\therefore \theta_2 = \sin^{-1}(0.5) = 30° \quad \text{... (4)}$$

So the required expression are

$$\boxed{V_{(t)} = 400 \sin(314t + 45°)} \quad \text{... (5)}$$

Scanned with CamScanner

$$\boxed{I_{(t)} = 20 \sin(314t + 30°)} \quad \cdots (6)$$

From the equation (5) and (6), the voltage leads the current by 15°

$$\therefore \quad V_{rms} = 0.707\ V_m$$
$$= 0.707 \times 400$$
$$= \boxed{282.8\ V} \quad \cdots (8)$$

Power factor = $\cos\phi = \cos 15° = 0.966$ (lag)

**(2) To find power consumption in the circuit**

Power $P = V \cdot I \cdot \cos\phi$

$$= 282.8 \times 14.14 \times 0.966$$
$$= \boxed{3862.83 \text{ watt}} \quad \cdots (9)$$

## Exercise-2.1

1. Derive an expression for the alternating sinusoidal e.m.f. **(Refer Section-2.6)**
2. Define r.m.s value and obtain the same for a sinusoidal voltage wave. **(Refer Section-2.8)**
3. Define average value and obtain the same for a half-wave rectified sinusoidal voltage wave. **(Refer Section-2.7)**
4. Define the following :
   (1) Frequency **(Refer Section-2.4(6))**
   (2) Phase **(Refer Section-2.4(8))**
   (3) Form factor **(Refer Section-2.9)**
   (4) Peak Factor **(Refer Section-2.10)**
5. Define the following :
   (1) Wave form **(Refer Section-2.4(1))**
   (2) Time period **(Refer Section-2.4(5))**
   (3) Cycle **(Refer Section-2.4(3))**
   (4) Amplitude **(Refer Section-2.4(4))**
6. Explain the terms phase and phase difference. **(Refer Section-2.4(8) and 2.4(10))**
7. Show that the form factor of the sinusoidal wave form is 1.11. **(Refer Section-2.9)**
8. Show that the peak factor of the sinusoidal wave form is 1.414. **(Refer Section-2.10)**
9. A coil having 200 turns of cross section 50 cm$^2$ is rotated about its axis perpendicular to the uniform magnetic field of strength 0.5 T at a speed of 1200 r.p.m. Determine :
   (1) equation for the instantaneous value of induced e.m.f.
   (2) maximum value of induced e.m.f.
   (3) instantaneous values of induced e.m.f. in the following cases :
      (a) the plane of coil is parallel to the field.
      (b) the plane of the coil is perpendicular to the field.
      (c) the plane of the coil is inclined at a angle of 45° to the field.

   **[Ans. :** $e = 314 \sin 125.67\ t$, 314 V, (a) 314 V (b) 0 V (c) 222 V]
10. A rectangular coil measuring 30 cm by 20 cm and having 40 turns is rotated about an axis coinciding with one of its longer sides at a speed of 1500 r.p.m. in a uniform magnetic field of flux density 0.075 T. Find from first principles, an expression for the instantaneous e.m.f. induced in the coil. Calculate its value at an instant of 0.002 sec. after the plane of coil has been perpendicular to the field. Assume that the flux is normal to the axis of rotation.

   **[Ans. :** $28.27 \sin 157\ t$, 8.74 V]

Scanned with CamScanner

11. Calculate the maximum value of the e.m.f. generated in a coil which is rotating at 50 rev/sec. in a uniform magnetic field is 0.8 T. The coil is wound on a square former having sides 5 cm in length and is wound with 300 turns. [Ans. : 188.5 V]

12. (a) What is the peak value of a sinusoidal alternating current of 4.78 r.m.s. amperes ?
(b) What is the r.m.s. value of rectangular voltage wave with an amplitude of 9.87 A ?
(c) What is the average value of a sinusoidal alternating current of 31 A maximum value ?
(d) An alternating current has a periodic time of 0.03 second. What is its frequency ?
(e) An alternating current is represented by $i = 70.7 \sin 520\, t$.
Determine : (i) the frequency, (ii) the current 0.0015 second after passing through zero increasing positively. [**Ans. :** 6.76 A, 9.87 A, 19.75 A, 33.3 Hz, 82.8 Hz, 49.7 A]

13. A voltage $e = 141.4 \sin (100\, \pi t + 10°)$ is applied to a ckt. It causes a steady state current to flow, which is given by $i = 14.14 \sin (314.2\, t - 20°)$. Determine (i) Amplitude of voltage and current (ii) The r.m.s. value of voltage and current (iii) Supply frequency (iv) Power factor of the circuit (v) Impedance and resistance of the circuit.
[**Ans. :** 141.4, 14.14, 100 V, 10 A, 50 Hz, 10 Ω, 8.66 Ω]

**Syllabus Topic :** Phasor representation of AC quantities

## 2.11 PHASOR REPRESENTATION OF AC QUANTITY :

- It has been discussed that an alternating quantity (varying sinusoidally) may be represented by the wave and equation.
- The waveform presents the graphical representation, whereas, the equation represents the mathematical expression of the instantaneous value of an alternating quantity.

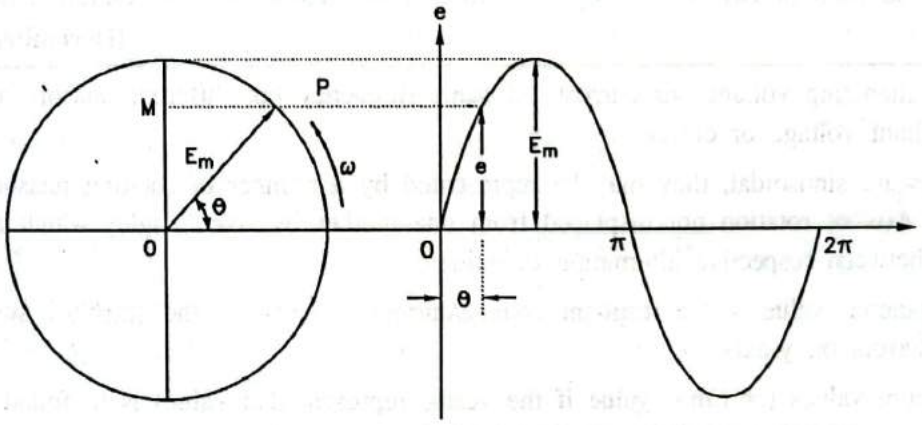


**FIG. 2.18 : REPRESENTATIN OF ALTERNATING QUANTITY BY A PHASOR**

- Consider an alternating quantity (voltage represented Fig. 2.18 by the equation $e = E_m \sin \omega t$. Take a line OP to represent the maximum value of voltage $E_m$ to scale. Imagine this line OP is rotating in anti-clockwise direction at an angular velocity ω rad./sec. about the point O. After time of t seconds the line is rotated through an angle θ (θ = ωt), from its horizontal position as shown in Fig. 2.18.
- The projection of OP on y-axis is OM. Then

$$OM = OP \sin \theta$$
$$= E_m \sin \omega t$$
$$= \boxed{e \text{ (the value of voltage at that instant)}}$$



Scanned with CamScanner

- Hence the projection of the phasor on the y-axis (i.e. OM) at any instant gives the value of voltage at that instant. Thus when $\theta = 90°$, the projection on y-axis OP ($= E_m$) is that the value of voltage at this instant ($\theta = 90°$) is $E_m$ can be readily obtained if we put $\theta = 90°$ in the voltage equation.
- If we plot the projections of phasor on y-axis versus its angular position point by point, a sinusoidal alternating voltage is generated as shown in Fig. 2.18. Thus the phasor represents the sine-wave for every instant of time.
- The phasor representation of an alternating quantity enables us to understand its magnitude and position on the axis. The alternating quantities can be added or subtracted with a fair degree of ease by representing them by phasor diagram.
- The phasor OP rotating in counter-clockwise direction will represent a sinusoidal quantity (current or voltage) if
  - (a) Its angular velocity is such that it completes one revolution in the same time as completed by the altenating quantity to complete one cycle.
  - (b) Its length is equal to the peak or maximum value of the sinusoidal voltage or current to a suitable scale.

## 2.12 ADDITION AND SUBTRACTION OF ALTERNATING QUANTITIES :

- In a.c. circuits, some time it is needed to add or subtract the alternating quantities. In such cases we following the following methods.

### 2.12.1 Addition of Alternating Quantities :

**GTU, December-2012**

**GTU Questions**

**1.** Explain the addition of two vectors by a parallelogram method and by resolution method. **[December-2012, 3-Marks]**

- The given altenating voltages or currents of same frequency but different phasors may be required to obtain resultant voltage or current.
- If quantities are sinusoidal, they may be represented by a number of rotating phasors (vectors) having a common axis of rotation not displaced from one-another by fixed angles which are equal to phase difference between respective alternating quantities.
- The instantaneous value of the resultant voltage/current is given by the algebraic sum of projection of different phasors on y-axis.
- The maximum values (or r.m.s. value if the vector represent that value) is to found by combining the several vectors by using parallelogram and method of components.

**1. Parallelogram Method :**

- This method is used for addition of two phasors at a time. Two phasor are represented in magnitude and direction (phases) as adjacent sides of a parallelogram. Then the diagonal of this parallelogram represents magnitude of resultant.
- Let two alternating currents $i_1$, and $i_2$ in the two branch of a circuit as shown in Fig. 2.19.

$$i_1 = I_{m1} \sin \omega t \text{ and}$$

$$i_2 = I_{m2} \sin (\omega t + \phi)$$

- The maximum values of two current $I_{m1}$ and $I_{m2}$ are represented as the two adjacent sides of OM and ON respectively of a parallelogram OMPN as shown in Fig. 2.19.

Scanned with CamScanner

- The current $I_{m2}$ leads the current $I_{m1}$ by an angle $\phi$. The maximum value of the resultant ($I_{mr}$) represented by diagonal OP of the parallelogram and leads the phasor $I_{m1}$ by $\theta$.

$$OP = \sqrt{OQ^2 + QP^2}$$

$$= \sqrt{(OM + MQ)^2 + QP^2}$$

$$I_{mr} = \sqrt{[I_{m1} + (I_{m2} + \cos\phi)]^2 + (I_{m2} \sin\phi)^2}$$

$$= \sqrt{I_{m1}^2 + I_{m2}^2 (\cos^2\phi + \sin^2\phi) + 2 I_{m1} I_{m2} \cos\phi}$$

$$= \boxed{\sqrt{I_{m1}^2 + I_{m2}^2 + 2 I_{m1} I_{m2} \cos\phi}}$$

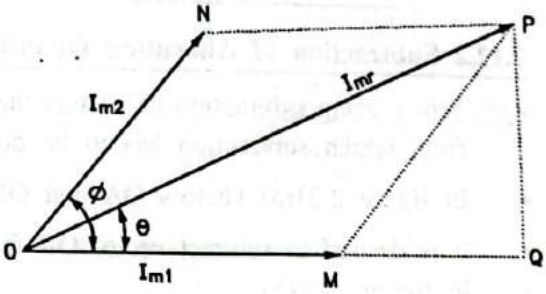


FIG. 2.19 : PARALLELOGRAM METHOD

Phase angle, $\theta = \tan^{-1}\left(\frac{PQ}{OQ}\right) = \boxed{\tan^{-1} \frac{I_{m2} \sin\phi}{I_{m1} + I_{m2} \cos\phi}}$

- The instananeous value of the resultant current is given as

$\boxed{i_r = i_{mr} \sin(\omega t + \theta)}$ as $\theta$ is positive

- This method is very suitable when alternating quantities to be added are not more than two.

## 2. Method of Components :

**GTU, December-2012**

- This method provides a very convenient means to add two more alternating quantities. Each phasor is resolve into horizontal and vertical components.
- The horizontal components are summed up algebraically to obtain the resultant horizontal component $I_{xx}$. Similarly, vertical components are added algebraically to obtain the resultant vertical component $I_{yy}$.
- Consider three alternating currents $i_1$, $i_2$, $i_3$ in three branches of a circuit as shown in Fig. 2.20 (a). Let they may be written by

$$i_1 = I_{m1} \sin(\omega t + \phi_1)$$

$$i_2 = I_{m2} \sin \omega t$$

$$i_3 = I_{m3} \sin(\omega t - \phi_2)$$

- The maximum value of three current $I_{m1}$, $I_{m2}$ and $I_{m3}$ are given by the phasors as shown in Fig. 2.20(a).

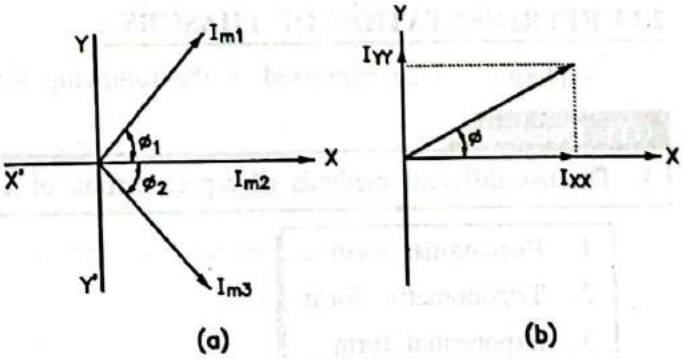


FIG. 2.20

Resolving the horizontal and verrical components.

Algebraic sum of horizontal components,

$$\boxed{I_{xx} = I_{m1} \cos\phi_1 + I_{m2} + I_{m3} \cos\phi_2}$$

Algebraic sum of vertical components,

$$\boxed{I_{yy} = I_{m1} \sin\phi_1 + 0 + I_{m3} \sin\phi_2}$$

Maximum value of resultant current

$$\boxed{I_{mr} = \sqrt{I_{xx}^2 + I_{yy}^2}}$$

- If $\phi$ is the phase difference (leadings) between resultant current and horizontal axis which is shown in Fig. 2.20(b).

Scanned with CamScanner

- The instantaneous value of the resultant current is given by the relation.

$$i_r = I_{mr} \sin(\omega t + \phi)$$

### 2.12.2 Subtraction of Alternting Quantities :

- While doing subtraction of vectors the vector which is to be subtraced is reversed and added to the vector from which subtraction has to be done.
- In figure 2.21(a) vectors OA and OB are shown.
- It is desired to subtract vector OB from vector OA. Vector OB is reversed and added to OA as shown in figure 2.21(b).

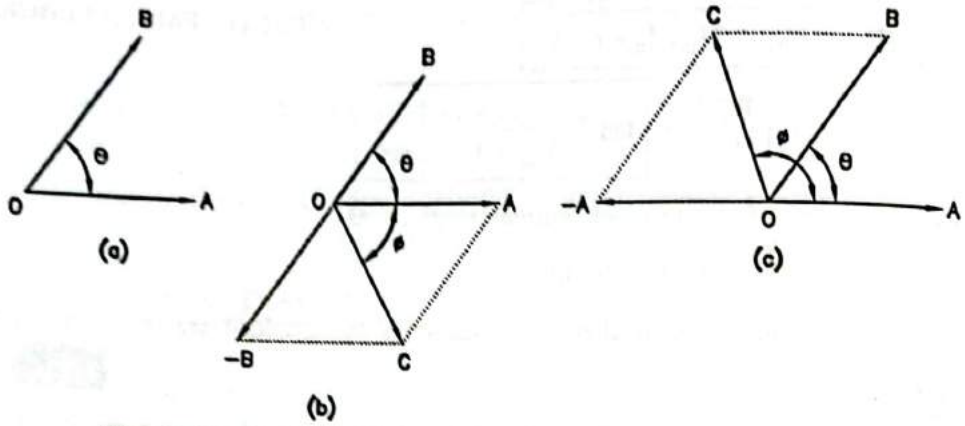


FIG. 2.21 : SUBSTRACTION OF ALTERNATING QUANTITIES

- The resultant OC is making an angle $\phi$ with OA.
- If however vector OA has to be subtracted from OB, OA is reversed and added to OB as shown in figure 2.21 (c). The resultant OC makes an angle $\phi$ with the reference.

## 2.13 REPRESENTATION OF PHASORS :

**GTU, June-2010**

A phasor can be expressed in the following form

**GTU Questions**

1. Discuss different methods of representation of vector quantities. [June-2010, 6-Marks]

1. Rectangular form
2. Trigonometric form
3. Exponential form
4. Polar form

### 2.13.1 Rectangular Form :

- This method is also called the rectangular notation or cartesian notation. Here the X component is called the real component and the Y component is called the imaginary component.
- These are called the active and reactive components respectively.
- Imaginary component is shown by operator $j$.
- In Fig. 2.22 vector A is shown. Horizontal component of A is $a_1$ and vertical component is $b_1$.
- Then vector A can be shown as $A = a_1 + j\, b_1$.

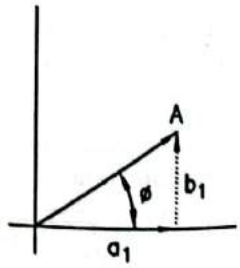


FIG. 2.22 : REPRESENTATION OF A VECTOR IN TERMS OF COMPONENTS

Scanned with CamScanner

- In Fig. 2.23 other vectors are shown in the symbolic notation.

$$E_1 = a_1 + j\,b_1$$
$$E_2 = -a_2 + j\,b_2$$
$$E_3 = -a_3 - j\,b_3$$
$$E_4 = a_4 - j\,b_4$$

$\boxed{|E_1| = \sqrt{a_1^2 + b_1^2}}$ and the angle with X axis is $\boxed{\theta_1 = \tan^{-1}\frac{b_1}{a_1}}$

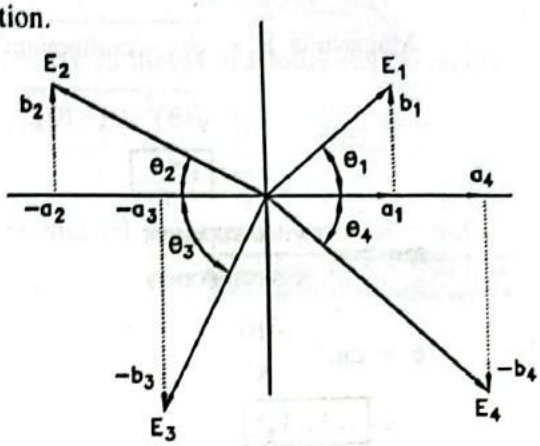


**FIG. 2.23 : REPRESENTATION OF VECTORS IN REACTANGULAR FORM**

### 2.13.2 Trigonometrical Form :

- We know that the X component of vector E is $|E|\cos\theta$ and Y component is $|E|\sin\theta$. So $E = |E|\cos\theta + j\,E\sin\theta$ so $a = |E|\cos\theta$ and $b = |E|\sin\theta$.
- So vector can also be represented in trigonometrical form as

$$\boxed{E = |E|\,(\cos\theta \pm j\,\sin\theta)}$$

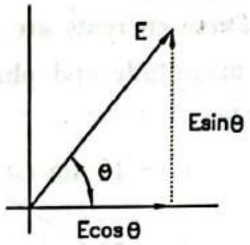


**FIG. 2.24 : EXPONENTIAL FORM OF VECTOR REPRESENTATION**

### 2.13.3 Exponential Form :

$(\cos\theta \pm j\,\sin\theta) = e^{(\pm j\theta)}$ so

$E = |E|\,(\cos\theta \pm j\,\sin\theta)$ can be represented as

$$\boxed{E = |E|\,e^{(\pm j\theta)}}$$

- This is called the exponential form. Magnitude of the vector is E and the angle from the reference is $\pm\theta$.

### 2.13.4 Polar Form :

- In this, the vector is shown by its magnitude and phase angle.

$$E = |E|\,\angle\theta \text{ or } E = E\,\angle\,\theta$$

If the angle is taken clockwise its sign is taken as negative. So the general form is

$$\boxed{E = |E|\,\angle \pm \theta}$$

### 2.13.5 Transformation of Vector From One Form into other :

- It is many times necessary to transfer the vector form into the other. Because the addition and subtraction can be done easily in the rectangular form while multiplication and division can be done easily in the polar form.

**Example-2.9 :**

**An alternating current is represented by $i = 8 - j10$. Express it in the polar form and exponential form. Show it on the vector diagram also.**

***Solution :***

$\boxed{i = 8 - j\,10}$ is in the cartesian form.

$\hookrightarrow$ y – component

$\hookrightarrow$ X – component

Scanned with CamScanner

$\therefore$ Magnitude is $= \sqrt{(x-\text{component})^2 + (y-\text{component})^2}$

$$= \sqrt{(8)^2 + (-10)^2}$$

$$= \boxed{12.8}$$

$$\tan\phi = \frac{y-\text{component}}{x-\text{component}}$$

$$\therefore \quad \phi = \tan^{-1}\frac{-10}{8}$$

$$= \boxed{-51.34°}$$

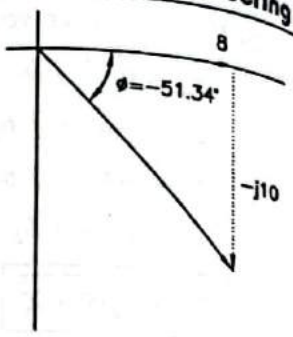


FIG. 2.25 : VECTOR OF EXAMPLE-2.9

the angle is negative as the sign of $j10$ is negative. So in polar form it is represented as $12.8 \angle -51.34$. And in exponential form it isrepresented as $12.8\, e^{-j51.34}$. Vector diagram is shown in Fig. 2.25.

**Example-2.10 :**

**Three currents are represented by $i_1 = 10 \sin\omega t$; $i_2 = 20 \sin(\omega t - \pi/6)$; $i_3 = 30 \sin(\omega t + \pi/4)$. Find magnitude and phase angle of resultant current.** **GTU, June-2006**

***Solution :***

$$i_1 = 10 \sin \omega t = 10 \angle 0°$$

$$i_2 = 20 \sin\left(\omega t - \frac{\pi}{6}\right) = 20 \angle -30°$$

$$i_3 = 30 \sin\left(\omega t - \frac{\pi}{4}\right) = 30 \angle 45°$$

- $x$-component of the resultant current $= 10 \cos 0° + 20 \cos(-30°) + 30 \cos 45°$

$$= 10 + 17.32 + 21.21$$

$$= 48.53 \text{ A}$$

- y-component of the resultant current $= 10 \sin 0° + 20 \sin(-30°) + 30 \sin 45°$

$$= 0 + (-10) + 21.21$$

$$= 11.21 \text{ A}$$

- Magnitude of the resultant current $= \sqrt{(x-\text{component})^2 + (y-\text{component})^2}$

$$= \sqrt{(48.53)^2 + (11.21)^2}$$

$$= \boxed{49.80 \text{ A}}$$

- Phase angle $\phi = \tan^{-1}\left(\frac{y-\text{comp.}}{x-\text{comp.}}\right)$

$$= \tan^{-1}\left(\frac{11.21}{48.53}\right)$$

$$= \boxed{13°}$$

$$\therefore \quad \boxed{i = 49.80 \sin(\omega t + 13°) \text{ A}}$$

Scanned with CamScanner

**Example-2.11 :**

**The following expressions represent the instantaneous values of e.m.f. in three coils connected in series.**

$$e_1 = 50 \sin \omega t$$
$$e_2 = 40 \sin (\omega t + 60°)$$
$$e_3 = 60 \sin (\omega t - 30°)$$

**Find an expression for the resultant e.m.f. when coils are connected to give the sum of e.m.f.s.**

**GTU, December-2011**

*Solution :*

$$e_1 = 50 \sin \omega t = 50 \angle 0°$$
$$e_2 = 40 \sin (\omega t + 60°)$$
$$= 40 \angle 60°$$
$$e_3 = 60 \sin (\omega t - 30°)$$
$$= 60 \angle -30°$$

X - component of the resultant voltage

$$= 50 \cos 0° + 40 \cos 60° + 60 \cos (-30°)$$
$$= 121.9 \text{ V}$$

Y - component of the resultant voltage

$$= 15 \sin 0° + 40 \sin 60° + 60 \sin (-30°)$$
$$= 4.64 \text{ V}$$

Magnitude of the resultant voltage

$$E = \sqrt{(x-\text{comp.})^2 + (y-\text{comp.})^2}$$
$$= \sqrt{(121.9)^2 + (4.64)^2}$$
$$= 121.98$$
$$\boxed{\cong 122 \text{ V}}$$

$$\text{Phase angle} = \phi = \tan^{-1}\left(\frac{y-\text{comp.}}{x-\text{comp.}}\right)$$
$$= \tan^{-1}\left(\frac{4.64}{121.9}\right)$$
$$= 2.179$$
$$\boxed{\cong 2.18°}$$

Expression of the resultant voltage

$$\boxed{e = 122 \sin (\omega t + 2.18°) \text{ Volt}}$$

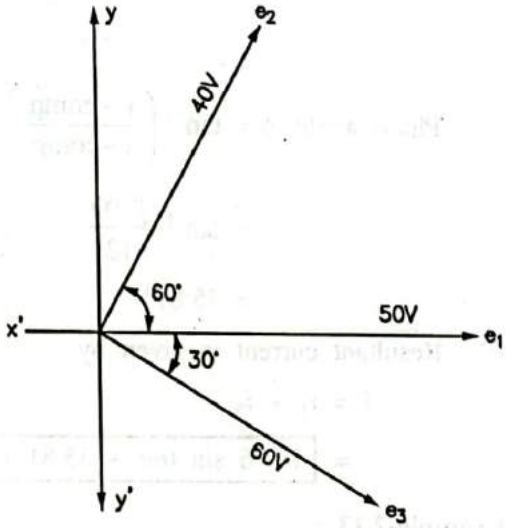


**FIG. 2.26 : VECTORS OF EXAMPLE-2.11**

**Example-2.12 :**

**Add the following currents as wave and as vectors.**

**GTU, June-2010**

$$i_1 = 7 \sin \omega t$$
$$i_2 = 10 \sin \left(\omega t + \frac{\pi}{3}\right)$$

*Solution :*

$$i_1 = 7 \sin \omega t = 7 \angle 0°$$
$$i_2 = 10 \sin \left(\omega t + \frac{\pi}{3}\right) = 10 \angle 60°$$

Scanned with CamScanner

X-comp. of the resultant current $= 7 \cos 0^\circ + 10 \cos 60^\circ$

$= 7 + 5$

$= 12$

Y-comp. of the resultant current $= 7 \sin 0 + 10 \sin 60^\circ$

$= 0 + 8.66$

$= 8.66$

Magnitude of the resultant current $I = \sqrt{(x-\text{comp.})^2 + (y-\text{comp.})^2}$

$= \sqrt{12^2 + 8.66^2}$

$= \boxed{14.76 \text{ A}}$

Phase angle, $\phi = \tan^{-1}\left(\dfrac{y-\text{comp.}}{x-\text{comp.}}\right)$

$= \tan^{-1} \dfrac{8.66}{12}$

$= 35.81^\circ$

Resultant current is given by

$i = i_1 + i_2$

$= \boxed{14.76 \sin (\omega t + 35.81^\circ) \text{ A}}$

**Example-2.13 :**

**Two currents are given by expressions.**

$i_1 = 40 \sin (314t + 30^\circ)$ **and**

$i_2 = 20 \sin (314t - 60^\circ)$

**Find expression for $(i_1 - i_2)$** **GTU, May-2013**

***Solution :***

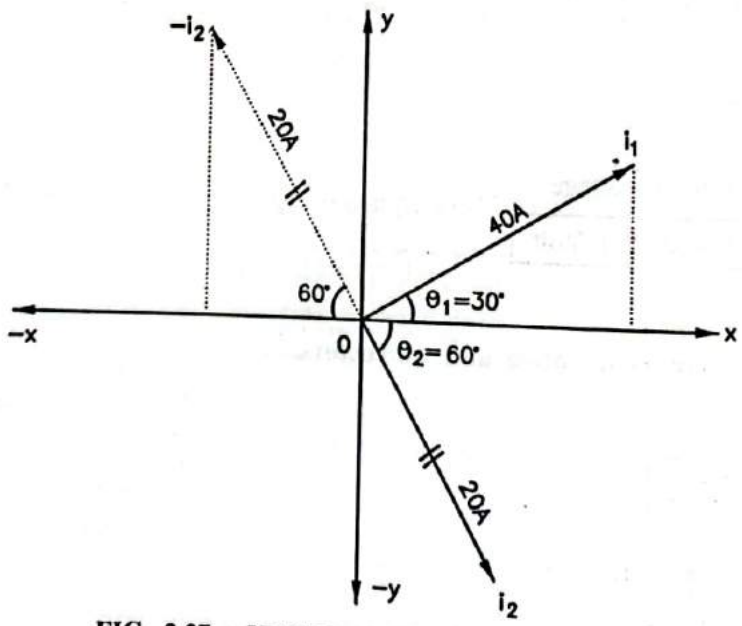


**FIG. 2.27 : VECTORS OF EXAMPLE-2.13**

Scanned with CamScanner

$i_1 = 40 \angle 30°$

$i_2 = 20 \angle -60°$

Total X-comp of the resultant current $(i_1 - i_2) = 40 \cos 30° - 20 \cos 60°$

$= 34.64 - 10$

$= 24.64.$ A

Total Y-comp of the resultant current $(i_1 - i_2) = 40 \sin 30° + 20 \sin 60°$

$= 20 + 17.32$

$= 37.32$ A

Magnitude of the resultant current $(i_1 - i_2) = \sqrt{(x-\text{comp.})^2 + (y-\text{comp.})^2}$

$= \sqrt{(24.64)^2 + (37.32)^2}$

$= \boxed{44.72 \text{ A}}$

Phase angle of the resultant current $(i_1 - i_2)$, $\phi = \tan^{-1} \dfrac{\text{Y-comp}}{\text{X-comp}}$

$= \tan^{-1} \dfrac{37.32}{24.64}$

$= \boxed{56.56°}$

$\therefore$ Expression for $(i_1 - i_2) = 44.72 \sin (314t + 56.56°)$ A

$\therefore$ $\boxed{i_1 - i_2 = 44.72 \sin (314t + 56.56°) \text{ A}}$

**Exercise-2.2**

1. Explain how sinusoidal quantities can be represented by phasors. **(Refer Section-2.11)**
2. Determine the equation of the resultant voltage of the following voltage :

   $e_1 = 25 \sin \omega t$, $\quad e_3 = 30 \cos \omega t$,

   $e_2 = 30 \sin\left(\omega t + \dfrac{\pi}{6}\right)$, $\quad e_4 = 20 \sin\left(\omega t - \dfrac{\pi}{4}\right)$ $\quad [e_r = 72 \sin (\omega t + 64.5°)]$

3. Four emfs $e_1 = 100 \sin \omega t$, $e_2 = 80 \sin\left(\omega t - \dfrac{\pi}{6}\right)$, $e_3 = 120 \sin\left(\omega t + \dfrac{\pi}{4}\right)$, $e_4 = 100 \sin\left(\omega t + \dfrac{2\pi}{3}\right)$ are induced in four coils connected in series so that the vector sum of four emfs is obtained. Calculate the resultant emf and its phase difference with (a) $e_1$ and (b) $e_2$.

   If the connections to the coil in which the emf $e_3$ is induced are reversed, find the new resultant emf. [208 sin ($\omega t$ – 0.202), (a) 11°34′ lag, 76 sin ($\omega t$ + 0.528)]
4. Two currents represented by $i_1 = 50 \sin \omega t$ and $i_1 = 100 \sin (\omega t + 45°)$ pass through a common conductor. Find a expression for the total current in a similar form. If the conductor has a resistance of 120 Ω, calculate the number of calories of heat produced in 20 minutes.

   [$i = 140 \sin (\omega t + 30.4°)$, $2.8 \times 10^7$ cal]
5. Three voltage represented by the following equations,

   $e_1 = 15 \sin \omega t$, $\quad e_2 = 5 \sin (\omega t + \pi/6)$ $\quad e_3 = 10 \cos \omega t$

   act together in an ac circuit. Write the expression for the resultant voltage. [$e = 23 \sin (\omega t + 32.9°)$]



Scanned with CamScanner

# Analysis of A. C. Circuits

**Syllabus Topic : Analysis of single phase ac circuits consisting of R**

## 2.14 PURELY RESISTIVE CIRCUIT :

**GTU Questions** **GTU, June-2010**

**1. Derive the equation of power in a single phase AC circuit in vector form only. [June-2010, 2-Marks]**

- Consider a circuit having a resistor of resistance $R$ ohms across the terminals of an alternating voltage source as shown in Fig. 2.28.

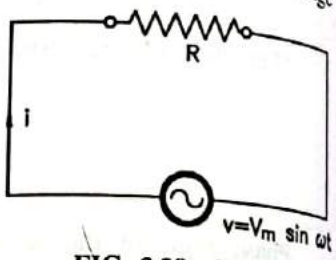


**FIG. 2.28 : PURELY RESISTIVE CIRCUIT**

- If the voltage has a sinusoidal waveform and $v = V_m \sin \omega t$ is the instantaneous value of the voltage at any given time '$t$', the current at that instant is given by Ohm's law,

$$i = \frac{v}{R}$$

$$= \frac{V_m \sin \omega t}{R}$$

$$= \frac{V_m}{R} \sin \omega t \quad \text{... (1)}$$

- The current '$i$' is maximum (peak) when $\sin \omega t$ is unity.

$$\boxed{\therefore \; I_m = \frac{V_m}{R}} \quad \text{... (2)}$$

- Hence equation (1) becomes,

$$\boxed{i = I_m \sin \omega t} \quad \text{... (3)}$$

**Voltage and Current Waveform and Phasor Diagram :**

- Comparing the equations of $v$ and $i$, we find that the applied voltage and the resulting current in the circuit are in phase with each other.
- The graphical and phasor representation of these quantities are shown in Fig. 2.29 and Fig. 2.30 respectively.

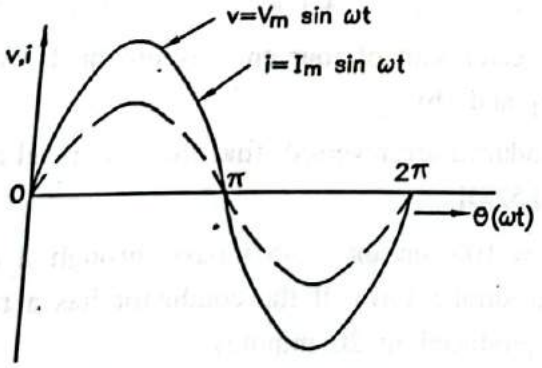


**FIG. 2.29 : WAVEFORMS**

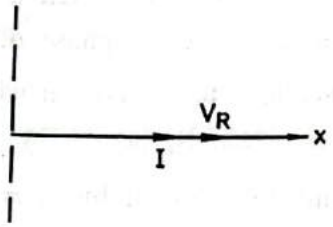


**FIG. 2.30 : PHASOR DIAGRAM**

- In Fig. 2.30 $V_R$ = Voltage across $R$ (rms)

  $I$ = Current through resistor (rms)

Scanned with CamScanner

- Power drawn by this circuit at any instant is the product of the instantaneous voltage and instantaneous current i.e.

$$p = v\,i \qquad \text{... (4)}$$

$$= (V_m \sin \omega t)\,(I_m \sin \omega t)$$

$$= V_m I_m \sin^2 \omega t$$

$$= V_m I_m \sin^2\theta \qquad (\because \omega t = \theta)$$

- Average power for one cycle,

$$P_{av} = \frac{1}{2\pi}\int_0^{2\pi} p \cdot d\theta$$

$$= \frac{1}{2\pi}\int_0^{2\pi} V_m I_m \sin^2\theta\, d\theta$$

$$= \frac{V_m I_m}{2\pi}\int_0^{2\pi} \sin^2\theta\, d\theta$$

$$= \frac{V_m I_m}{2\pi}\int_0^{2\pi}\left(\frac{1-\cos 2\theta}{2}\right) d\theta$$

$$= \frac{V_m I_m}{4\pi}\left[\theta - \frac{\sin 2\theta}{2}\right]_0^{2\pi}$$

$$= \frac{V_m I_m}{4\pi}[2\pi]$$

$$= \frac{V_m I_m}{2}$$

$$= \frac{V_m}{2}\cdot\frac{I_m}{2}$$

$$P_{av} = V_{rms} \cdot I_{rms}$$

$$\boxed{P_{av} = V \cdot I}$$

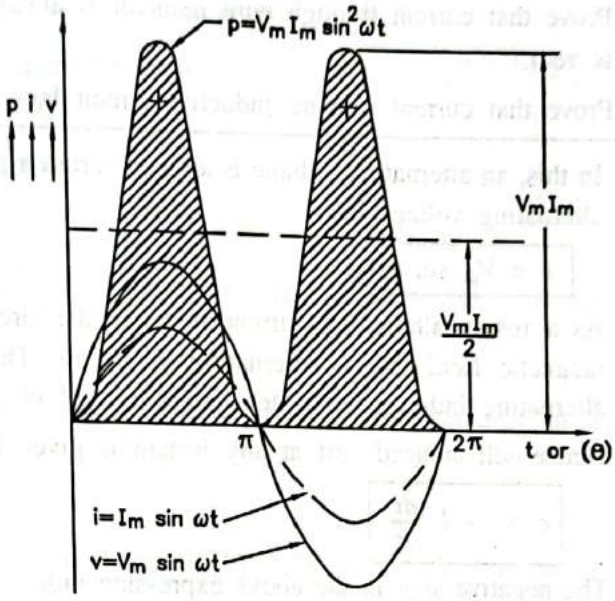


FIG. 2.31 : WAVEFORMS OF $v$, $i$ AND $p$

**Power-factor :**

- It is the cosine of the phase angle between applied voltage and the resulting current in the circuit.
- In a purely resistive circuit $V$ and $I$ are both in phase with each other. So the phase angle (Phase difference) between $V$ and $I$ is zero.

$$\therefore \text{ Power factor} = \cos\phi$$

$$= \cos 0^\circ$$

$$= \boxed{1 \text{ (unity)}}$$

- Thus power factor of a purely resistive circuit is **unity**.

Scanned with CamScanner

Syllabus Topic : Analysis of single-phase ac circuit consisting of L

## 2.15 PURELY INDUCTIVE CIRCUIT :

GTU, April-2010; May-2013; Dec. 2020

**GTU Questions**

1. Prove that current through pure inductor is always lagging by 90° to its voltage and power consumed is zeor. [April-2010, December-2020, 7-Marks]
2. Prove that current in pure inductive circuit lags its voltage by 90°. [May-2013, 6-Marks]

- In this, an alternating voltage is applied across a pure inductor of self inductance $L$ henry. Let the applied alternating voltage be

$$\boxed{v = V_m \sin \omega t} \quad \text{... (1)}$$

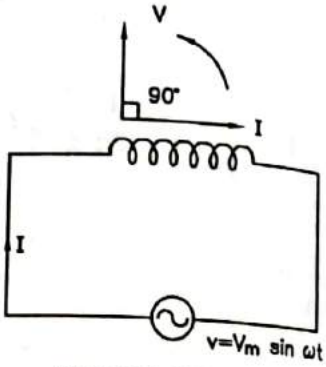


FIG. 2.32 : PURELY INDUCTIVE CIRCUIT

- As a result, alternating current flows in the circuit which will set up a magnetic field that is alternating in nature. This will give rise to an alternating induced emf often called as emf of self induction.
- Hence self-induced emf at any instant is given by

$$\boxed{e = -L\frac{di}{dt}} \quad \text{... (2)}$$

- The negative sign in the above expression indicates that it is an opposing emf. Hence the applied voltage is equal and opposite to the self-induced emf in the inductor at every instant.
- Thus the applied voltage at any instant $v = -e = -\left(-L\frac{di}{dt}\right) = \boxed{L\frac{di}{dt}}$ ... (3)
- Substituting the value of $v$ from equation (1), in equation (3) we get,

$$V_m \sin \omega t = L\frac{di}{dt}$$

$$\therefore \quad di = \frac{V_m}{L}\sin \omega t \, dt$$

Integrating both sides of above equation, we get

$$i = \frac{V_m}{L}\int \sin \omega t \, dt$$

$$= -\frac{V_m}{L}\frac{\cos \omega t}{\omega}$$

$$= -\frac{V_m}{\omega L}\cos \omega t$$

$$= -\frac{V_m}{\omega L}\sin\left[\frac{\pi}{2} - \omega t\right]$$

$$= \frac{V_m}{\omega L}\sin\left[-\left(\frac{\pi}{2} - \omega t\right)\right]$$

$$= \frac{V_m}{\omega L}\sin\left(\omega t - \frac{\pi}{2}\right) \quad \text{... (2.9)}$$

- From the equation (4), it is observed that the current attains its maximum value when $\sin\left(\omega t - \frac{\pi}{2}\right)$ becomes unity and the maximum value of current is

$$\boxed{I_m = \frac{V_m}{\omega L}} \quad \text{... (5)}$$

Scanned with CamScanner

- So we find that if the applied voltage is represented by

$$v = V_m \sin \omega t$$

then current flowing in a purely inductive circuit is given by

$$i = I_m \sin\left(\omega t - \frac{\pi}{2}\right)$$

- $\frac{\pi}{2}$ → Current is legs behind the applied voltage
- $I_m$ → Maximum value of current
- $i$ → Instantaneous value of current

**Conclusion from Equation :**

- From the above equation it is clearly seen that the current lags behind the applied voltage (voltage across the inductor) by an angle $\frac{\pi}{2}$ radian or 90°.
- Hence in a purely inductive circuit, the current flowing in the circuit lags the applied voltage by an angle of 90°.

**Waveform and phasor Diagram :**

- Graphical and phasor representation of these quantities are shown in Fig. 2.33 and Fig. 2.34 respectively.

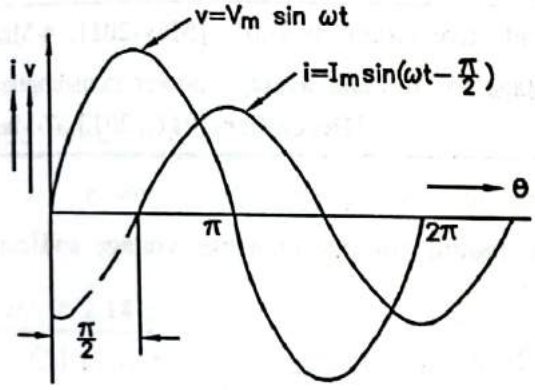


FIG. 2.33 : WAVEFORMS

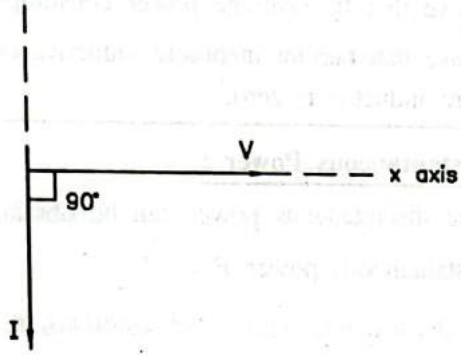


FIG. 2.34 : PHASOR DAIGRAM

## 2.15.1 Concept of Inductive Reactance ($X_L$) :

- In purely inductive circuitt, according to equation (5)

$$I_m = \frac{V_m}{\omega L}$$

- In this expression, the term '$\omega L$' plays the role of opposition similar to resistance.
- This opposition to the flow of current offered by an inductance (L) is called the inductive reactance denoted by $X_L$.
- Its unit is ohm (Ω).

$$\therefore \quad I_m = \frac{V_m}{X_L}$$

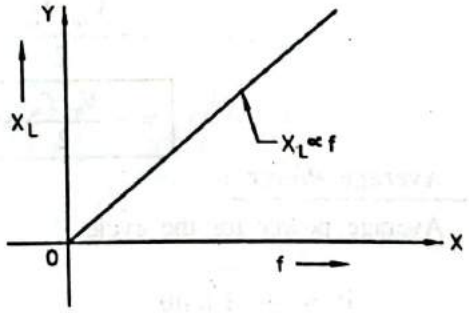


FIG. 2.35 : GRAPH OF INDUCTIVE REACTANCE ($X_L$) AGAINST FREQUENCY

Scanned with CamScanner

### 2.15.2 Definition of $X_L$ : GTU, May-2009, 2018

**GTU Questions**

1. Define the term : Inductive reactance explain how it depends on frequency in an A.C. circuit [May-2009, 7-Marks]
2. Explain the effect of frequency on resistance, inductive reactance. [May-2018, 3-Marks]

- Inductive reactance can be defined as opposition offered by inductance of a circuit to the flow of an alternating current.
- Hence $X_L = \omega L$

$$= 2\pi f L$$

$\therefore$ $\boxed{X_L \propto f}$ (if L is constant)

- Thus we conclude that the inductive reactance is directly proportional to the frequency of the sinusoidal emf applied to the circuit.
- Fig. 2.35 shows the graph of inductive reactance ($X_L$) against frequency under such condition. It is straight line passing through the origin.

### 2.15.3 Power in Purely Inductive Circuit : GTU, May-2011; Dec. 2011, 2013

**GTU Questions**

1. Prove that the average power consumption in a pure inductive circuit is zero. [May-2011, 4-Marks]
2. Prove that current in purely inductive circuit lag its voltage by 90° and average power consumption in pure inductor is zero. [December-2011, 2013, 7-Marks]

#### 1. Instantaneous Power :

- The instantaneous power can be obtained by taking the product of instantaneous voltage and current.

Instantaneous power $P = v.i$

$$= V_m \sin \omega t \times I_m \sin(\omega t - \pi/2)$$

$$= V_m I_m \sin \omega t \sin(\omega t - \pi/2)$$

$$= V_m I_m \sin \omega t \sin[-(\pi/2 - \omega t)]$$

$$= -V_m I_m \sin \omega t \sin(\pi/2 - \omega t)$$

$$= -V_m I_m \sin \omega t \cos \omega t$$

$$= -\frac{V_m I_m}{2} \sin 2\omega t$$

$$\boxed{= -\frac{V_m I_m}{2} \sin 2\theta} \quad [\because \omega t = \theta]$$

#### 2. Average Power :

- Average power for the cycle

$$P = \frac{1}{2\pi} \int_0^{2\pi} p \, d\theta$$

$$= -\frac{1}{2\pi} \int_0^{2\pi} \frac{V_m I_m}{2} \sin 2\theta \, d\theta$$

Scanned with CamScanner

$$= \frac{V_m I_m}{4\pi}\left[\frac{-\cos 2\theta}{2}\right]_0^{-2\pi}$$

$$= \frac{V_m I_m}{8\pi}[\cos 2\theta]_0^{2\pi}$$

$$= \frac{V_m I_m}{8\pi}[\cos 4\pi - \cos 0]$$

$$= \boxed{0}$$

- Hence the average power consumed in a purely inductive circuit is zero.

### 2.15.4 Power Waveform for purely inductive circuit :

- The maximum (peak) value of the instantanesus power is $\frac{V_m I_m}{2}$ and the frequency of power wave is twice that of the applied voltage.
- In a purely inductive circuit, the phase angle (phase difference) between the applied voltage (voltage across the inductor) and the current in the circuit is 90°.

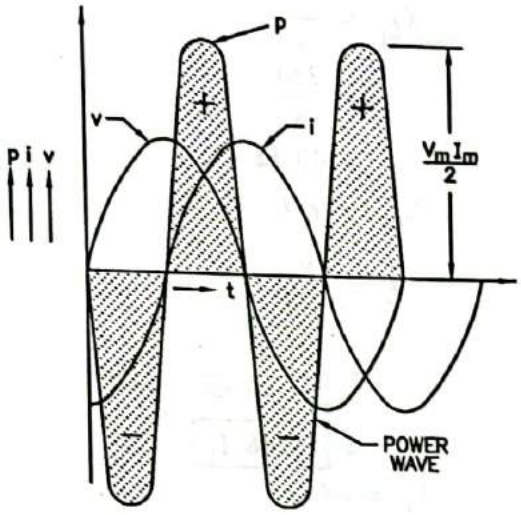


**FIG. 2.36 : WAVE FORM OF *v, i* AND *p***

### 2.15.5 Power Factor :

$\therefore$ Power factor = $\cos\phi = \cos 90° = 0$ (lagging)

- Thus power factor of a purely inductive circuit is zero lagging.

**Example-2.14 :**

**Calculate the current which will flow through a coil of negligible resistance and inductance of 0.8 H, When connected to 230 V, 50 Hz supply.**

***Solution :***

L = 0.8 H

V = 230 V

$f$ = 50 Hz

Inductive Reactance

$$X_L = \omega L$$

$$= 2\pi f L$$

$$= 2\pi \times 50 \times 0.8$$

$$= \boxed{251.2\ \Omega}$$

$$I = \frac{V}{X_L}$$

$$= \frac{230}{251.2}$$

$$= \boxed{0.915\ \text{A}}$$

Scanned with CamScanner

**Example-2.15 :**

**A choke coil of negligible resistance is connected across 230 V, 50 Hz, supply. It draws 5 Amp from mains. Calculate the inductance of a coil. If the frequency of supply is reduced to 40 Hz, what will be the current drawn from mains ?**

**GTU, May-2009**

***Solution :***

Given Data :

$V = 230$ V, $f_1 = 50$ Hz, $f_2 = 40$ Hz

$I_1 = 5$A $L = ?$ $I_2 = ?$

$$X_{L_1} = \frac{V}{I}$$

$$= \frac{230}{5}$$

$$= 46\ \Omega$$

$$X_{L_1} = \omega L$$

$$\therefore \quad L = \frac{X_{L_1}}{\omega}$$

$$= \frac{46}{2 \times \pi \times 50}$$

$$= \boxed{0.146\ \text{H}}$$

$$X_L = \omega L$$

$$X_L \ \alpha \ \omega$$

$$\therefore \frac{X_{L_2}}{X_{L_1}} = \frac{\omega_2}{\omega_1} = \frac{2\pi f_2}{2\pi f_1} = \frac{f_2}{f_1}$$

$$\therefore X_{L_2} = \frac{f_2}{f_1} X_{L_1}$$

$$= \frac{40}{50} \times 46$$

$$= 36.8\ \Omega$$

$$I_2 = \frac{V}{X_{L_2}}$$

$$= \frac{230}{36.8}$$

$$= \boxed{6.25\ \text{A}}$$

**Example-2.16 :**

**An alternating voltage of 200V, 50 Hz is applied to a coil of negligible resistance and inductance of 0.1 H. Find the current drawn if (i) frequency is reduced to half and (ii) frequency is doubled. The supply voltage is kept constant.**

**GTU, May-2012**

***Solution :***

$$X_L = \omega L$$

$$= 2\pi f L$$

$$= 2\pi \times 50 \times 0.1$$

$$= 31.4\ \Omega$$

Scanned with CamScanner

$$I = \frac{V}{X_L} = \frac{200}{31.4}$$

$$= 6.36 \text{ A}$$

(i) **Frequency is reduced to half**

$\therefore \quad f = 25$ Hz

$\therefore \quad X_L = 2\pi f L$

$= 2 \times \pi \times 25 \times 0.1$

$= 15.7\ \Omega$

$$I = \frac{V}{X_L} = \frac{200}{15.7}$$

$$= \boxed{12.72 \text{ A}}$$

(ii) **Frequency is doubled**

$\therefore \quad f = 100$ Hz

$\therefore \quad X_L = 2\pi f L$

$= 2 \times 3.14 \times 100 \times 0.1$

$= 62.8\ \Omega$

$$I = \frac{V}{X_L} = \frac{200}{62.8}$$

$$= \boxed{3.18 \text{ A}}$$

**Syllabus Topic : Analysis of Single Phase ac Cirouit Consisting of C**

## 2.16 PURELY CAPACITIVE CIRCUIT :

**GTU, December-2011, 2013**

**GTU Questions**

1. Prove that current in purely capacitive circuit leads its voltage by 90° and average power consumption in pure capacitor is zero. **[December-2011, 2013, 7-Marks]**

- Fig. 2.37 shows an a.c. circuit containing a capacitor of capacitance C farads. Let the alternating voltage applied be

$$v = V_m \sin \omega t \quad \text{... (1)}$$

we know that

$$q = C \cdot V \quad \text{... (2)}$$

where, q = charge on the plates at any instant of time '$t$'

$v$ = voltage across the plates at any instant of time '$t$'

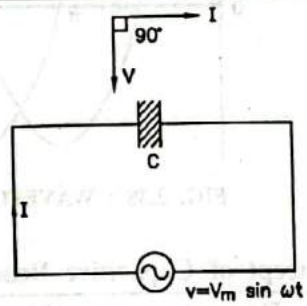


**FIG. 2.37 : PURELY CAPACITIVE CIRCUIT**

- Substituting the value of v from (1) in equation (2) we get

$$q = C\ V_m \sin \omega t \quad \text{... (3)}$$

Also we know that

$$i = \frac{dq}{dt} \quad \text{... (4)}$$

$$= \frac{d}{dt}(C\ V_m \sin \omega t)$$



Scanned with CamScanner

$$= C V_m \omega \sin \omega t$$

$$= \frac{V_m}{1/\omega C} \cos \omega t$$

$$\boxed{i = \frac{V_m}{1/\omega C} \sin (\omega t + \pi/2)} \quad \cdots (5)$$

- From the expression (5) it is observed that the current attains its maximum value when $\sin (\omega t + \pi/2)$ becomes unity and hence the maximum value of current is given by

$$\boxed{I_m = \frac{V_m}{1/\omega C} = \omega C V_m} \quad \cdots (6)$$

- And the expression for the current becomes

$$i = I_m \sin (\omega t + \pi/2)$$

- It is seen that if the applied voltage is given by

$$v = V_m \sin \omega t$$

then the current is given by

$$\boxed{i = I_m \sin (\omega t + \pi/2)}$$

↳ Current is leading the applied voltage by 90°

↳ Maximum value of current

↳ Instantaneous value of current

**Conclusion From Equation :**

- The current in a purely capacitive circuit is leading the applied voltage by an angle $\pi/2$ radian or 90°.
- Graphical and phasor representation of the these quantities are shown in Fig. 2.38 and 2.39 respectively.

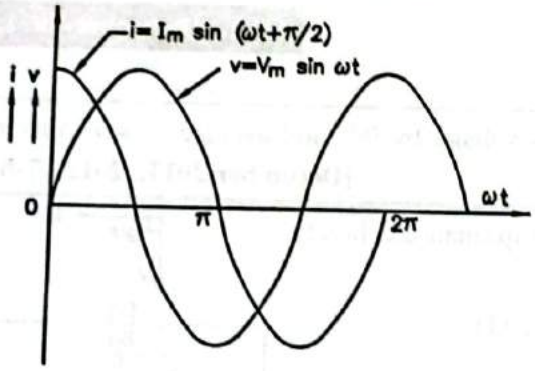


FIG. 2.38 : WAVEFORMS OF $v$ AND $i$

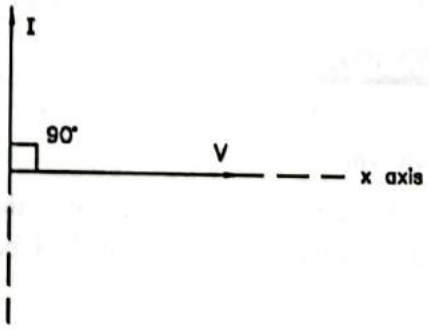


FIG. 2.39 : PHASOR DIAGRAM

**Concept of Capacitive Reactance ($X_C$) :**

- From expression (6)

$$I_m = \frac{V_m}{1/\omega C}$$

- In this expression, the term $\frac{1}{\omega C}$ plays the role of opposition similar to resistance.
- This opposition to the flow of current offered by a capacitance $C$ is called the capacitive reactance.
- It is denoted by $X_C$. Its unit is ohm (Ω).

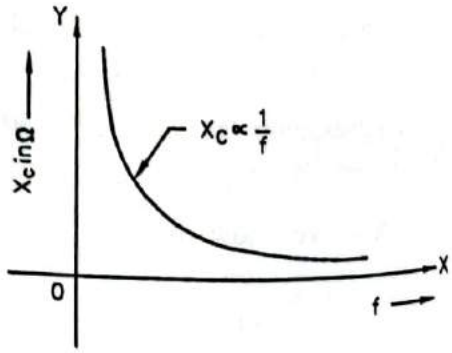


FIG. 2.40 : GRAPH OF CAPACITIVE REACTANCE ($X_C$) AGAINST FREQUENCY

Scanned with CamScanner

Again, $X_c = \frac{1}{\omega C} = \frac{1}{2\pi f C}$

$$\boxed{\therefore \; X_c \propto \frac{1}{f}}$$

- Thus capacitive reactance is inversely proportional to the frequency of the sinusoidal emf applied to the circuit.

### 2.16.1 Power in Purely Capacitive Circuit : GTU, May-2011; December-2011, 2013

**GTU Questions**

1. Prove that the average power consumption in a pure capacitive circuit is zero. **[May-2011 4-Marks]**
2. Prove that current in purely capacitive circuit leads its voltage by 90° and average power consumption in pure capacitor is zero. **[December-2011, 2013, 7-Marks]**

**1. Instantaneous Power :**

- Instantaneous value of power in an ac circuit is given by

$$p = v\,i$$
$$= V_m \sin \omega t \; I_m \sin(\omega t + \pi/2)$$
$$= V_m I_m \sin \omega t \sin(\omega t + \pi/2)$$
$$= V_m I_m \sin \omega t \cos \omega t$$
$$= \boxed{\frac{V_m I_m}{2} \sin 2\omega t = \frac{V_m I_m}{2} \sin 2\theta} \qquad [\because \; \omega t = \theta]$$

**2. Average Power :**

- Average power for one complete cycle is given by

$$P = \frac{1}{2\pi} \int_0^{2\pi} p \, d\theta$$
$$= \frac{1}{2\pi} \int_0^{2\pi} \frac{V_m I_m}{2} \sin 2\theta \, d\theta$$
$$= \frac{V_m I_m}{4\pi} \left[ \frac{-\cos 2\theta}{2} \right]_0^{2\pi}$$
$$= \frac{V_m I_m}{8\pi} [\cos 2\theta]_{2\pi}^{0}$$
$$= \frac{V_m I_m}{8\pi} (1 - 1)$$
$$= \boxed{0}$$

- Thus average power consumed by a purely capacitive circuit for one complete cycle is zero.

### 2.16.2 Power Waveform for Purrely Capacitive Circuit :

- This fact is graphically illustrated in Fig. 2.41. Here we observe that in a purely capacitive circuit, the average power demand from supply is zero.
- Again it is seen that power wave is a sine wave of frequency double that of the applied voltage.
- The maximum value of the instantaneous power is $\frac{V_m I_m}{2}$.

Scanned with CamScanner

### 2.16.3 Power Factor :

- In a purely capacitive circuit, the phase angle (phase difference) between the applied voltage and current in the circuit is 90° (lead).

  ∴ Power factor = $\cos \phi$

  $= \cos 90°$

  $= \boxed{0 \text{ (lead)}}$

- Thus power factor of a purely capacitive circuit is zero leading.

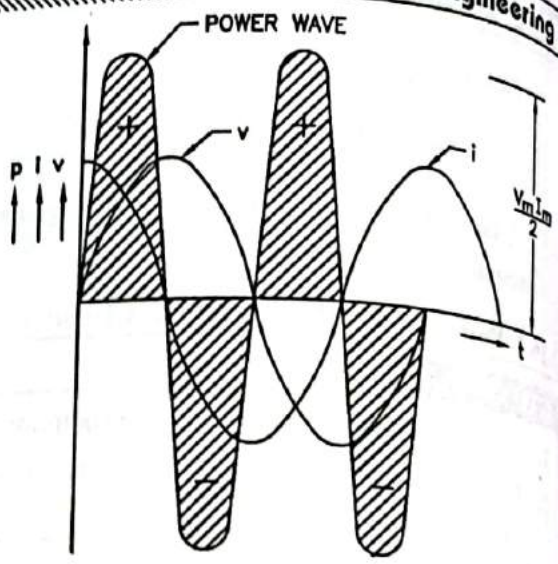


FIG. 2.41 : WAVEFORMS OF $v$, $i$ AND $p$

**Example-2.17 :**

**A capacitor of value 100 μ F is connected across a 200 V, 50 Hz supply.**

**Calculate : (i) reactance of the capacitor**

**(ii) r.m.s. value of the current**

**(iii) the maximum**

**GTU, January-2011**

***Solution :***

$C = 100\ \mu F = 100 \times 10^{-6}$ F

Capacitive reactance $X_c = \dfrac{1}{\omega C}$

$= \dfrac{1}{2\pi f C}$

$= \dfrac{1}{2 \times 3.14 \times 50 \times 100 \times 10^{-6}}$

$= \boxed{31.85\ \Omega}$

RMS value of the current $I = \dfrac{V}{X_C}$

$= \dfrac{200}{31.85}$

$= \boxed{6.28 \text{ A}}$

Maximum current, $I_m = \sqrt{2}\ I$

$= \sqrt{2} \times 6.28$

$= \boxed{8.88 \text{ A}}$

**Example-2.18 :**

**A capacitor connected to a 230 V, 50 Hz supply draws 10 amp. What current it will draw for a frequency of 20 Hz ? Assume voltage remains unchanged.**

**GTU, December-2010**

***Solution :***

Given Data :

$V = 230$ Volt, $f_1 = 50$ Hz, $f_2 = 20$ Hz, $I_1 = 10$ A

Scanned with CamScanner

$$X_{C_1} = \frac{V}{I_1} = \frac{230}{10} = 23\ \Omega$$

We know, $X_C = \frac{1}{\omega C} = \frac{1}{2\pi f C}$

$$\therefore\ X_C\ \alpha\ \frac{1}{f}$$

$$\therefore\ \frac{X_{C_2}}{X_{C_1}} = \frac{f_1}{f_2}$$

$$\therefore\ X_{C_2} = \frac{f_1}{f_2} X_{C_1}$$

$$= \frac{50}{20} \times 23$$

$$= 57.5\ \Omega$$

$$I_2 = \frac{V}{X_{C_2}}$$

$$= \frac{230}{57.5}$$

$$= \boxed{4\ \text{A}}$$

## Exercise-2.3

1. Define the term inductive reactance of a coil and explain its variation with frequency. **(Refer Section-2.15.1)**
2. What is the phase difference between the applied voltage and current in a purely inductive circuit ? Justify your answer analytically. **(Refer Section-2.15)**
3. What is the phase difference between the applied voltage and current in a purely capacitive circuit ? Justify your answer analytically ? **(Refer Section-2.16)**
4. Define the term capacitive reactance and explain its variation with frequency. **(Refer Section-2.16)**
5. Derive an expression for the instantaneous current drawn by a purely inductive circuit on application of sinusoidal alternating voltage. **(Refer Section-2.15.3)**
6. Derive an expression for the instantaneous current in a purely capacitive circuit when a sinusoidal voltage given by $e = E_m \sin \omega t$ is applied to the circuit. **(Refer Section-2.16.1)**
7. Prove that the current in a purely capacitive circuit leads its voltage by 90°. **(Refer Section-2.16)**
8. Prove analytically that the current in a purely inductive circuit lags behind its voltage by 90°. **(Refer Section-2.15)**
9. Prove that average power consumed by a purely inductive circuit is zero when a sinusoidal voltage is applied to it. **(Refer Section-2.15.3(2))**
10. Prove that average power consumed by purely capacitive circuit is zero when a sinusoidal voltage is applied to it. **(Refer Section-2.16.1(2))**
11. A pure resistive circuit is excited by a voltage of $v = 100 \sin 314\, t$. The current flowing through it is found to be $i = 25 \sin 314\, r$. Determine the resistance and the power consumed in the resistance. **[1250 W, 4 Ω]**

Scanned with CamScanner

12. A choke coil having negligible resistance takes a current of 5 A when connected across a 200 V, 50 Hz supply. Determine the value of inductance. Also determine the current when the frequency is reduced to 45 Hz. **[0.127 H, 4.44 A]**

13. A voltage of 150 V, 50 Hz is applied to a coil of negligible resistance and inductance 0.2 H. Write the time equations for the voltage and current. **[$v = 212.13 \sin 314\,t$, $i = 3.376 \sin\left(314\,t - \frac{\pi}{2}\right)$]**

14. Calculate the current drawn by a pure capacitive circuit of 25 μF when connected across 200 V, 60 Hz supply. Also calculate the current through it when (i) frequency is doubled (ii) frequency is halved. **[1.88 A, 3.77 A, 0.942 A]**

15. A voltae of 110 V is applied to a pure capacitive circuit having capacitance of 15 μF. What must be the frequency if the current flowing through it is 0.518 A ? **[50 Hz]**

## A. C. Series Circuits

**Syllabus Topic :** Analysis of single phase ac circuit consisting of R-L combination

### 2.17 R-L SERIES CIRCUIT :

**GTU, May-2017; December-2012, 2017; January-2020**

**GTU Questions**

1. Draw the phasor diagram in R-L circuit. Draw impedance triangle and power triangle. **[December-2012, January-2020, 7-Marks]**
2. Draw impedance triangle for R-L siereis and R-C series circuit. **[May-2017, 1-Mark]**
3. Deduce an expression for the everage power in a single phase series R.L. circuit and there from explain the term power factor. **[December-2017, 4-Marks]**

- A pure resistance $R$ and pure inductive coil of inductance $L$ are connected in series.

  $V$ = Supply voltage

  $V_R$ = Potential difference across $R = I.R$

  $V_L$ = Potential difference across $L = I.X_L$

  $f$ = Supply frequency (Hz)

- As the R and L are connected in series, the same current (I) will flow through both of them.
- So it is convenient to draw phasor diagram by taking the current as a reference phasor.

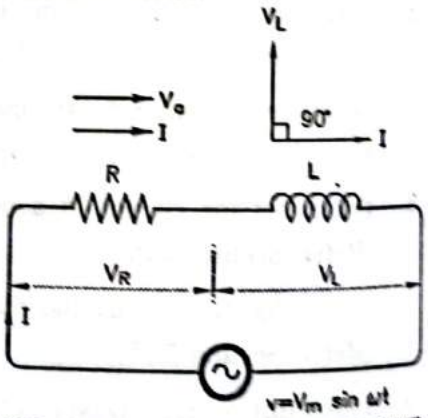


FIG. 2.42 : R-L SERIES CIRCUIT

- The complete phasor diagram of R-L series circuit is shown in FIg. 2.43

**Phasor diagram**

From diagram

$$OB^2 = OA^2 + AB^2$$

Scanned with CamScanner

$$V = \sqrt{(V_R)^2 + (V_L)^2}$$

$$= \sqrt{(IR)^2 + (IX_L)^2}$$

$$= I\sqrt{R^2 + X_L{}^2}$$

$$\therefore \quad I = \frac{V}{\sqrt{R^2 + X_L^2}}$$

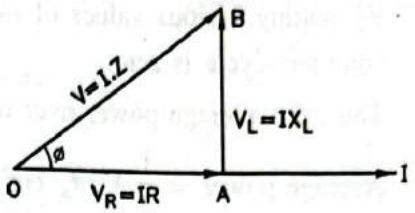


**FIG. 2.43 : PHASOR DIAGRAM OF R-L SERIES CIRCUIT**

where $\sqrt{R^2 + X_L^2}$ = impedance of the circuit = Z

$$\therefore \quad \boxed{I = \frac{V}{Z}}$$

**Phase Angle = $\phi$**

$$\tan\phi = \frac{V_L}{V_R} = \frac{IX_L}{IR} = \frac{X_L}{R}$$

$$\therefore \quad \phi \ \tan^{-1}\left(\frac{X_L}{R}\right)$$

**Equation For Current : $i = I_m \sin(\omega t - \phi)$**

- Current $I$ lags behind the applied voltage V by an angle $\phi$

**Instantaneous Power**

$$P = V \times i$$

$$= V_m \sin \omega t \times I_m \sin(\omega t - \phi)$$

$$= V_m I_m \sin \omega t \cdot \sin(\omega t - \phi)$$

$$= \frac{V_m I_m}{2} 2 \sin \omega t \cdot \sin(\omega t - \phi)$$

$$= \frac{V_m I_m}{2} [(\cos\phi - \cos(2\omega t - \phi))]$$

$$\boxed{= \underbrace{\frac{1}{2} V_m I_m \cos\phi}_{\text{Constant part}} - \underbrace{\frac{1}{2} V_m I_m \cos(2\omega t - \phi)}_{\text{Variable part}}}$$

**Average Power :**

- Thus the instantaneous value of the power consists of two components.

(1) $\frac{1}{2} V_m I_m \cos\phi$ which remains constant w.r.t. time.

(2) $\frac{1}{2} V_m I_m \cos(2\omega t - \phi)$ which is a variable component which varies at twice the supply frequency.

Scanned with CamScanner

- By putting various values of $\omega t$, we find that the average value of the variable power component over a complete cycle is zero.
- Thus, the average power over one complete cycle is

$$\text{Average power} = \frac{1}{2} V_m I_m \cos\phi$$

$$= \frac{V_m}{\sqrt{2}} \cdot \frac{I_m}{\sqrt{2}} \cdot \cos\phi$$

$$= \boxed{VI\cos\phi}$$

**Waveform of $v$ and $i$ :**

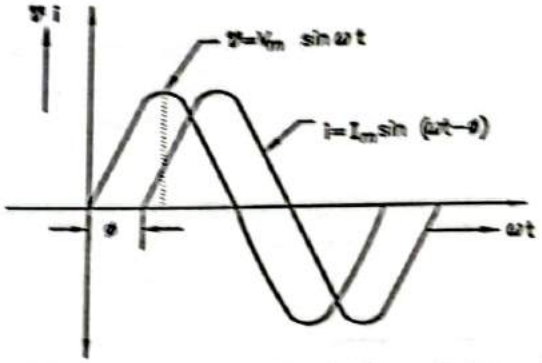


FIG. 2.44 : WAVE FORM OF $v$ AND $i$

**Power waveform :**

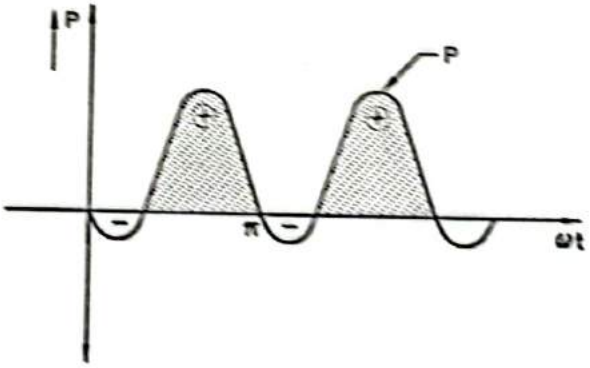


FIG. 2.45 : WAVE FORM OF P

**Power factor :**

$$\cos\phi = \frac{V_R}{V}$$

$$= \frac{IR}{IZ}$$

$$\boxed{= \frac{R}{Z}}$$

## 2.18 ACTIVE AND REACTIVE COMPONENTS OF CURRENT :

- Fig. 2.46 shows the phasor diagram in which current $I$ is lagging behind the voltage $V$ by an angle $\phi$.
- The current can be resolved into two mutually perpendicular components known as active component and reactive component.

Scanned with CamScanner

(i) **Active component :** It is that component of current which is in phase with the applied voltage i.e. $I \cos \phi$. It is also known as 'wattful' component. $OA$ is the active component of current.

(ii) **Reactive component :** It is that component of current which is in quadrature with $V$. i.e. $I \sin \phi$. It is also known as "wattless" component. It is represented by $AB$.

- Hence active component of current $= I \cos \phi$
- and reactive component of current $= I \sin \phi$

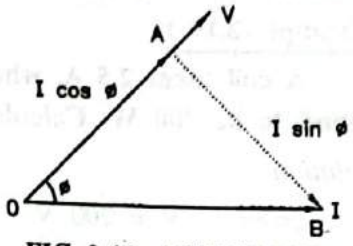


**FIG. 2.46 : ACTIVE AND REACTIVE COMPONENTS OF CURRENT**

**Syllabus Topic :** Real power, Reactive power, Apparent power

## 2.19 ACTIVE, REACTIVE & APPARENT POWER :

**GTU, January-2016, 2019, 2020**

**GTU Questions**

1. Derive the equations of active, reactive and apparent powers in a series R-L circuit with sinusoidal AC supply. **[January-2019, 2020, 7-Marks]**

**Apparent Power :**

- The product of r.m.s values of voltage and current in a.c. circuit is called apparent power.
- It is denoted by 'S'
- Apperent power $= VI$
- It is measured in volt amp (VA)

**Active Power or Real Power :**

- The power which is actually consumed in an a.c. circuit is called active power.

**OR**

- It is the power which is actually dissipated in the circuit resistance.
- It is denoted by 'P'
- Active Power = Voltage × active component of current = $\boxed{V \times I \cos \phi}$
- It is measured in watt (W)

**Reactive Power :**

- Power drawn by the circuit due to reactive component of current is called reactive power.
- It is denoted by 'Q'
- Reactive Power = Voltage × Reactive component of current = $\boxed{V \times I \sin \phi}$
- It is measured in VAR (Volt Ampere Reactive)

**Power Triangle :**

**GTU, May-2017**

- A purely inductive and capacitive circuit do not consume any power. It means that during +Ve half cycle they received power and returned to the source in –Ve half cycle. This power which flows back is called reactive power.

Where OA = Active power $= VI \cos \phi$

AB = Reactive Power $= VI \sin \phi$

OB = Apparent power $= VI$

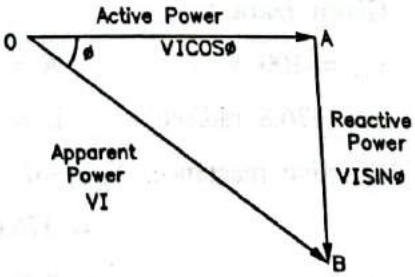


**FIG. 2.47 : POWER TRIANGLE**



Scanned with CamScanner

**Example-2.19 :**

**A coil takes 2.5 A, when connected across 200V, 50 Hz main. The power consumed by the coil is found to be 400 W. Calculate resistance and inductance of the coil.**

***Solution :***

Given : $V = 200$ V  Find :

$I = 2.5$ A  $R = ?$

$f = 50$ Hz  $L = ?$

$P = 400$ watt

Power $P = I^2R = (2.5)^2 \times R$

$\therefore \quad 400 = (2.5)^2 \times R$

$$\therefore \quad R = \frac{400}{(2.5)^2}$$

$$= \boxed{64\ \Omega}$$

Impedance of coil $Z = \dfrac{V}{I} = \dfrac{200}{2.5} = 80\ \Omega$

But $\quad Z = \sqrt{R^2 + X_L^2}$

$\therefore \quad Z^2 = R^2 + X_L^2$

$\therefore \quad X_L = \sqrt{Z^2 - R^2}$

$= \sqrt{80^2 - 64^2}$

$= \boxed{48\ \Omega}$

But, $X_L = 2\pi f L$

$\therefore \quad 48 = 2\pi \times 50 \times L$

$$\therefore \quad L = \frac{48}{100\pi}$$

$$= \boxed{0.153\ \text{H}}$$

**Example-2.20 :**

**An alternating voltage of v = 100 sin (376.8 t) is applied to a coil having resistance of 6 Ω and inductance of 21.22 mH.**

**Determine : (i) Current through the coil**

**(ii) Power dissipated in the coil.**

**GTU, June-2011**

***Solution :***

**Given Data :**

$V_m = 100$ V  $R = 6\ \Omega$

$\omega = 376.8$ rad/sec  $L = 21.22$ mH $= 21.22 \times 10^{-3}$ H

Inductive reactance, $X_L = \omega L$

$= 376.6 \times 21.22 \times 10^{-3}\ \Omega$

$= 8\ \Omega$

Scanned with CamScanner

Total impedance, $Z = \sqrt{R^2 + X_L^2}$

$= \sqrt{6^2 + 8^2}$

$= 10\ \Omega$

Current through the coil, $I_m = \frac{V_m}{Z}$

$= \frac{100}{10}$

$= \boxed{10\ A}$

R.M.S. value of current, $I = \frac{10}{\sqrt{2}}$

$= \boxed{70.7\ A}$

Power dissipated in the coil, $P = I^2R$

$= (7.07)^2 \times 6$

$= \boxed{300\ W}$

**Example-2.21 :**

**An inductive coil draws 10 A current and consumes 1 kW power from a 200 V, 50 Hz ac supply. Determine : (i) impedance in cartesian form and polar form**

**(ii) power factor**

**(iii) reactive and apparent power** **GTU, January-2016**

***Solution :***

Impedance of the coil $Z = \frac{V}{I}$

$= \frac{200}{10}$

$= 20\ \Omega$

Power consuemd in coil $= 1$ kW

$= 1000$ W

Power $= I^2 R$

$\therefore\ R = \frac{\text{Power}}{I^2} = \frac{1000}{(10)^2} = 10\ \Omega$

Inductive reactance, $X_L = \sqrt{Z^2 - R^2} = \sqrt{(20^2 - 10^2)} = 17.32\ \Omega$

$\therefore$ Impedance $Z = R + j\,X_L = 10 + j\,17.32\ \Omega$

Impedance in polar form $Z = \sqrt{10^2 + 17.32^2}\ \tan^{-1}\left(\frac{17.32}{10}\right)$

$= \boxed{20 \angle 60^\circ \text{ polar form}}$

Power factor, $\cos\phi = \frac{R}{Z}$

$= \frac{10}{20}$

$= 0.5$

$\therefore\ \phi = \boxed{60^\circ}$

Scanned with CamScanner

Apparent power, $S = VI$

$= 200 \times 10$

$= \boxed{2000 \text{ VA}}$

Reactive power $Q = VI \sin\phi$

$= 200 \times 10 \sin 60°$

$= \boxed{1732 \text{ VAR}}$

**Example-2.21.1 :**

**In a series R-L circuit, a voltage of 10 V at 50 Hz frequency produces a current of 700 mA. In the same circuit with same magnitude of applied voltage with a frequency of 75 Hz produces a current of 500 mA. Find out the values of R and L in the circuit.** **GTU, January-2019**

***Solution :***

**Given**

$V = 10$ V

$f_1 = 50$ Hz

$I_1 = 700$ mA $= 700 \times 10^{-3}$ A

$f_2 = 75$ Hz

$I_2 = 500$ mA $= 500 \times 10^{-3}$ A

**Find**

$R = ?$

$L = ?$

**(1) Case-1 :**

$V = 10$ V, $f_1 = 50$ Hz, $I_1 = 700 \times 10^{-3}$

$$Z = \sqrt{R^2 + (2\pi \times 50\, L)^2}$$

$$= \sqrt{R^2 + 98696\, L^2}$$

But $V = I \cdot Z$

$$10 = 700 \times \sqrt{R^2 + 98696\, L^2}$$

$$\therefore \quad \sqrt{R^2 + 98696\, L^2} = \frac{10}{700 \times 10^{-3}}$$

$$\therefore \quad R^2 + 98696\, L^2 = \frac{10{,}000}{49} \quad \text{... (1)}$$

**(1) Case-2 :**

$V = 10$ V, $f_2 = 75$ Hz, $I_2 = 500 \times 10^{-3}$ A

$$Z = \sqrt{R^2 + (2\pi \times 75\, L)^2}$$

$$= \sqrt{R^2 + 222066\, L^2}$$

$V = I \cdot Z$

$$\therefore \quad 10 = 500 \times 10^{-3} \sqrt{R^2 + 222066\, L^2}$$

$$\therefore \quad \sqrt{R^2 + 222066\, L^2} = 20$$

$$\therefore \quad R^2 + 222066\, L^2 = 400 \quad \text{... (2)}$$

Substracting equation (1) from (2), we get

$$222066\, L^2 - 98696\, L^2 = 400 - \left(\frac{10{,}000}{49}\right)$$

Scanned with CamScanner

$\therefore \quad 123370\,L^2 = 196$

$\therefore \quad L = 0.398\ H \equiv \boxed{40\ mH}$

Substitute the value of L in equation (2), we get

$R^2 + 222066\,L^2 = 400$

$R^2 + 222066\,(0.398)^2 = 400$

$\therefore \quad \boxed{R = 6.9\,\Omega}$

**Exercise-2.4**

1. Find the expression for the current and calculate the power when a voltage represented by $v = 283 \sin 100\pi t$ is applied to a coil having R = 50 ohms and L = 0.159 H. $\left[i = 4 \sin\left(100\pi t - \frac{\pi}{4}\right),\ 400\ W\right]$
2. A coil having resistance R ohms and inductance L henries is connected across a variable frequency alternating current supply of 110 V. An ammeter in the circuit showed 15.6 A when the frequency was 80 Hz and 19.7 A when the frequency was 40 Hz. Find the values of R and L. [4.95 Ω, 0.01 H]
3. A noninductive load takes 10 A at 100 V. Calculate the inductance of a reactor to be connected in series in order that the same current be supplied from 200 V, 50 Hz mains. What is the phase angle between the supply voltage and current ? Neglect the resistance of the reactor. [0.062 H, 63°]
4. A 100 V, 50 Hz inductive circuit takes a current of 15 A which lags the applied voltage by 30°. Calculate the resistance and inductance of the circuit. [5.77 Ω, 0.0106 H]

**Syllabus Topic :** Power Factor

## 2.20 POWER FACTOR IN A.C. CIRCUITS :

**GTU, May-2013, 2015, 2017; Dec. 2008, 2013, 2014, 2015, 2017; Jan. 2019**

**GTU Questions**

1. Define power factor. What is the power factor of a pure inductor ? Give the difference between active and reactive power. **[December-2008, 4-Marks]**
2. Define power factor. **[May-2013, December-2013, 1-Mark]**
3. Compare the following term with respect to ac waveform : Power factor. **[December-2014, 4-Marks]**
4. Define the following for AC circuits : Power factor. **[May-2015, December-2015, 1-Mark]**
5. What is the power factor for pure resistivie circuit ? **[May-2017, 1-Mark]**
6. Explain the term power factor. Explain the steps to obtain power factor of an AC circuit with parallel connection of R, L and C elements. **[January-2019, 7- Marks]**

(1) It is the cosine of the phase angle between the applied voltage and resulting current in the circuit.

(2) It is defined as the ratio of resistance of the circuit to the impedance of the circuit.

$$\text{Power factor} = \frac{\text{Resistance}}{\text{Impedance}}$$

$$\boxed{\cos\phi = \frac{R}{Z}}$$

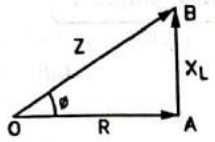


FIG. 2.48

(3) It is the ratio of active power to apparent power.

$$\text{Power factor} = \frac{\text{Active power}}{\text{Apparent power}}$$

$$\boxed{\cos\phi = \frac{kW}{kVA}}$$

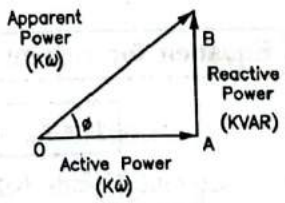


FIG. 2.49

Scanned with CamScanner

Syllabus Topic : Analysis of single phase ac circuit consisting of R-C combination

## 2.21 R-C SERIES CIRCUIT :

GTU, May-2016

**GTU Questions**

1. Draw the phasor diagram of R-C series circuit. [May-2016, 1-Mark]

- Circuit contain resistance and capacitance in series with single phase a.c. supply.

  $V$ = Supply voltage

  $V_R$ = Potential difference across $R = IR$

  $V_C$ = Potential difference across $C = IX_C$

  $f$ = Supply frequency

- This is series connection. So we take current as a refrence.

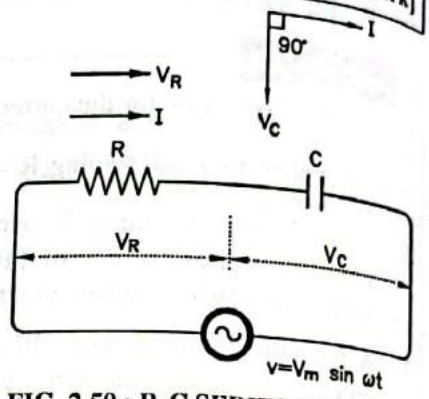


FIG. 2.50 : R-C SERIES CIRCUIT

**Phasor diagram :**

- From the phasor diagram, it is seen that the current leads the applied voltage by an angle $\phi$. Hence the power factor of the circuit is always leading.
- Referring to the Fig. 2.51, the magnitude of the applied voltage is given by

$$V = \sqrt{V_R^2 + V_C^2}$$

$$= \sqrt{(IR)^2 + (I X_C)^2}$$

$$= I\sqrt{R^2 + X_C^2}$$

$$\therefore \quad I = \frac{V}{\sqrt{R^2 + X_C^2}}$$

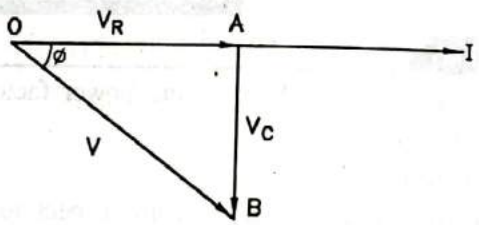


FIG. 2.51 : PHASOR DIAGRAM OF R-C SERIES CIRCUIT

$$\text{Impedance} = Z = \sqrt{R^2 + X_C^2}$$

$$\therefore \quad I = \frac{V}{Z}$$

**Phase angle :**

$$\tan\phi = \frac{V_C}{V_R} = \frac{IX_C}{IR} = \frac{X_C}{R}$$

$$\therefore \quad \phi = \tan^{-1}\left(\frac{X_C}{R}\right)$$

**Equation for current :**

$$\boxed{i = I_m \sin(\omega t + \phi)}$$

- Current $I$ leads behind the applied voltage $V$ by an angle $\phi$.

Scanned with CamScanner

Wave form :

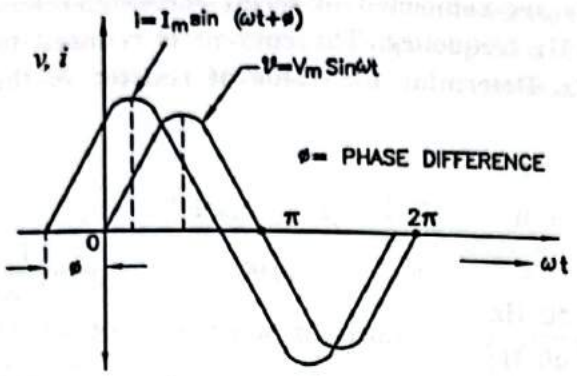


**FIG. 2.52 : WAVE FORM OF V AND L**

### 2.21.1 Instantaneous Power :

$$P = v \times i$$

$$= V_m \sin \omega t \times I_m \sin (\omega t + \phi)$$

$$= \frac{V_m . I_m}{2} [2 \sin \omega t . \sin (\omega t + \phi)]$$

$$= \frac{V_m I_m}{2} [\cos \phi - \cos (2\omega t - \phi)]$$

$$= \underbrace{\frac{1}{2} V_m I_m \cos \phi}_{\text{Constant part}} - \underbrace{\frac{1}{2} V_m I_m \cos (2\omega t - \phi)}_{\text{Fluctuating part}}$$

- The instantaneous power consists of two parts

**Part-1 :**

$$\frac{1}{2} V_m I_m \cos \phi.$$

- This is constant part of the total instantanious power.

**Part-2 :**

$$\frac{1}{2} V_m I_m \cos (2\omega t - \phi).$$

- This is the fluctuating part and has a frequancy. Which is double the frequency of the voltage and current waves. Therefore the average value of this second term is zero.

### 2.21.2 Average Power :

$$\therefore \quad \text{Average Power} = \frac{V_m I_m}{2} \cos\phi = VI \cos \phi$$

### 2.21.3 Power Factor :

$$\cos \phi = \frac{V_R}{V} = \frac{IR}{IZ} = \frac{R}{Z}$$

Scanned with CamScanner

**Example-2.22 :**

**A resistor & a capacitor are connected in series across 230 V, ac supply. The current taken by the circuit is 6 A for 50 Hz frequency. The current is reduced to 5 A, when the frequency of supply is decreased to 40 Hz. Determine the value of resistor & the capacitor.**

**GTU, December-2009**

***Solution :***

Given Data :

$V = 230$ V

$I_1 = 6$ A $\quad f_I = 50$ Hz

$I_2 = 5$ A $\quad f_2 = 40$ Hz

$R = ?$ $\quad C = ?$

$$Z_1 = \frac{V}{I_1} = \frac{230}{6} = 38.3\ \Omega$$

$$Z_2 = \frac{V}{I_2} = \frac{230}{5} = 46\ \Omega$$

$$X_{C_1} = \frac{1}{2\pi f_1 C} = \frac{1}{2\pi \times 50 \times C}$$

$$X_{C_2} = \frac{1}{2\pi f_3 C} = \frac{1}{2\pi \times 40 \times C}$$

$$Z_1^2 = R^2 + X_{C_1}^2$$

$$\therefore \quad (38.3)^2 = R^2 + X_{C1}^2 \qquad \text{... (i)}$$

$$\therefore \quad \boxed{1466.89 = R^2 + X_{C1}^2}$$

$$Z_2^2 = R^2 + X_{C2}^2$$

$$\therefore \quad (46)^2 = R^2 + X_{C2}^2$$

$$\therefore \quad \boxed{2116 = R^2 + X_{C2}^2} \qquad \text{... (ii)}$$

Now, we take equation (ii) – (i)

$$\therefore \quad 649.1 = X_{C2}^2 - X_{C1}^2$$

$$\therefore \quad 649.1 = \left(\frac{1}{2\pi \times 40 \times C}\right)^2 - \left(\frac{1}{2\pi \times 50 \times C}\right)^2$$

$$\therefore \quad C = 0.0939 \times 10^{-3}\ \text{F}$$

$$\boxed{C = 93.9\ \mu\text{F}}$$

Now Substitute the value of C in equation (ii), we get

$$\therefore \quad 2116 = R^2 + X_{C2}^2$$

$$\therefore \quad 2116 = R^2 + \left(\frac{1}{2\pi \times 40 \times 93.9 \times 10^{-6}}\right)^2$$

$$\therefore \quad R^2 = 2116 - 1795.5$$

$$= 320.5$$

$$\therefore \quad \boxed{R = 17.9\ \Omega}$$

Scanned with CamScanner

**Example-2.23 :**

**A capacitor of 35 μF is connected in series with a variable resitor. It is connected across 230 V, 50 Hz mains. Find the value of the resistor for a condition when the voltage across capacitor is half the supply voltage, also calculate, (i) current drawn (ii) power factor and (iii) power of the said conditions.** **GTU, May-2012**

***Solution :***

Given Data : $C = 35\ \mu F$, $f = 50$ Hz, $V_c = \frac{1}{2}$ V, $R = ?$

$$X_c = \frac{1}{\omega C} = \frac{1}{2\pi \times 50 \times 35 \times 10^{-6}} = 90.99\ \Omega$$

Let under the condition mentioned, the value of resistor is $R$ ohms.

$$\therefore\ Z = \sqrt{R^2 + X_C^2} = \sqrt{R^2 + (90.99)^2}$$

Supply voltage, $V = IZ$

Voltage across $C$ is $V_c = I\,X_c$

where, $Z = \sqrt{R^2 + X_c^2} = \sqrt{R^2 + (90.99)^2}$

Given that $V_c = \frac{1}{2}$ V

$$\therefore\ IX_c = \frac{1}{2} I Z$$

$$\therefore\ X_c = \frac{Z}{2} \qquad \text{... (1)}$$

$$\therefore\ 90.99 = \frac{1}{2}\sqrt{R^2 + (90.99)^2}$$

$$\therefore\ \sqrt{R^2 + (90.99)^2} = 2 \times 90.99$$

$$\boxed{R = 157.6\ \Omega}$$

From the equation (1)

$$Z = 2\,X_c = 2 \times 90.99 = 182\ \Omega$$

$$I = \frac{V}{Z} = \frac{230}{182} = \boxed{1.26\ A}$$

$$\text{Power factor } \cos\phi = \frac{R}{Z} = \frac{157.6}{182} = \boxed{0.866 \text{ legging}}$$

$$\text{Power} = V\,I\cos\phi$$

$$= 230 \times 1.26 \times 0.866$$

$$= \boxed{251\ W}$$

**Exercise-2.5**

1. Find the circuit constants of a two element series circuit which consumes 700 W with 0.707 leading power factor. The applied voltage is $v = 141.4 \sin 314\,t$. **[R = 7.13 Ω, C = 446.6 μF]**
2. A series RC circuit consumes a power of 7 kW when connected across 200 V, 50 Hz supply. The voltage across the resistor is 130 V.
   Calculate (i) resistance, capacitance, impedance (ii) the current (iii) equations for the voltage and current.
   **[R = 2.414 Ω, C = 1128.7 μF, Z = 3.71 Ω, I = 53.85 A, i = 76.155 sin (314 $t$ +) 49.4°, $v$ = 282.84 sin 314 $t$]**
3. A resistance of 100 ohms is connected in series with a 50 μF capacitor to a 200 V, 50 Hz supply. Find (i) impedance (ii) current (iii) power factor. **[48.54 Ω, 1.69 A, 0.844 leading]**
4. A lamp rated 500 W, 100 V is connected in series with a capacitor across 250 V, 50 Hz supply. Determine the value of the capacitance. **[690 μF]**



Scanned with CamScanner

Syllabus Topic : Analysis of single phase ac circuit consisting of R-L-C combination

## 2.22 R-L-C SERIES CIRCUIT :

GTU, December-2012, 2015

**GTU Questions**

1. Analyze the phenomena of R-L-C series AC circuit with the help of equations and graph. [December-2015, 7-Marks]
2. Ex;lain series R-L-C circuit with the phasor diagram for $X_L : X_C$; $X_L < X_C$ and $X_L = X_C$. [December-2012, 7-Marks]

- A circuit that contain a pure resistance of $R$ ohm, a purel inductance of $L$ Henry, and a pure capacitance of $C$ Farad in series is known as $R$-$L$-$C$ series circuit.
- It is shown in Fig. 2.53.

$V$ = Applied voltage

$V_R$ = Potential difference across resistance $R$

$= IR$

$V_L$ = Potential difference across inductance $L$

$= IX_L$

$V_C$ = Potential difference across capacitance $C$

$= IX_C$

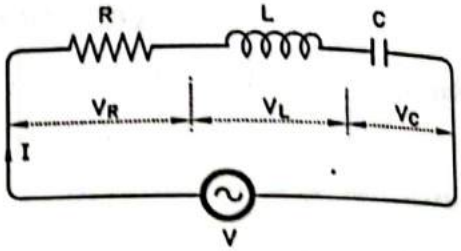


FIG. 2.53 : R-L-C SERIES CIRCUIT

- The phasor diagram is shown in Fig. 2.54.
- The current ($I$) is taken as a refrence phasor.

(1) $V_R$ is in phase with I.

(2) $V_L$ leads I by 90°

(3) $V_C$ lags I by 90°

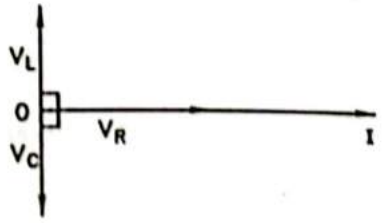


FIG. 2.54 : PHASOR OF VOLTAGE REPRESENTATION ACROSS EACH ELEMENT

The equation for applied voltage $V = V_m \sin \omega t$

Since $V_L$ and $V_C$ are in opposition to each other, there can be two cases :

(1) $V_L > V_C$ (2) $V_C > V_L$

**If (i) $V_L > V_C$**

- The circuit behaves as an inductive circuit
- The phasor diagram is given below.

From diagram

$$OB^2 = OA^2 + AB^2$$

$$OB = \sqrt{OA^2 + AB^2}$$

$$V = \sqrt{(V_R)^2 + (V_L - V_C)^2}$$

$$= \sqrt{(IR)^2 + (IX_L - IX_C)^2}$$

$$= I\sqrt{R^2 + (X_L - X_C)^2}$$

$$I = \frac{V}{\sqrt{R^2 + (X_L - X_C)^2}} = \frac{V}{Z}$$

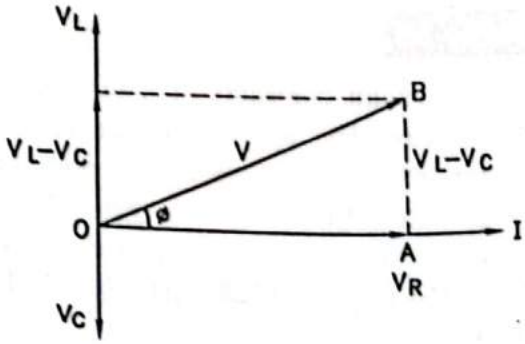


FIG. 2.55 : PHASOR DIAGRAM OF R-L-C SERIES CIRCUIT $V_L > V_C$

Scanned with CamScanner

$\therefore$ $Z = \sqrt{R^2 + (X_L - X_C)^2}$ is the oppositon offered to the flow of current is called impedance.

$$\cos\phi = \frac{V_R}{V}$$

$$= \frac{IR}{IZ}$$

$$= \frac{R}{Z}$$

$$= \frac{R}{\sqrt{R^2 + (X_L - X_C)^2}}$$

- Thus when $V_L > V_C$ the series current $I$ lags $V$ by angle $\phi$.

$\therefore$ $V = V_m \sin \omega t$ $V.i$ and $i = I_m \sin(\omega t - \phi)$

$\therefore$ Power consumed, $P = Vi = V_m \sin \omega t \,.\, I_m \sin(\omega t - \phi)$

$$\therefore \quad P = \frac{V_m I_m}{2}(2 \sin \omega t \sin(\omega t - \phi)$$

$$= \frac{V_m I_m}{2}(\cos\phi - \cos(2\omega t - \phi))$$

- Since the average value of $\cos(2\omega t - \phi)$ over a cycle is zero, the power consumed,

$$P = \frac{V_m I_m}{2}\cos\phi$$

$$= \frac{V_m}{\sqrt{2}}\frac{I_m}{\sqrt{2}}\cos\phi$$

$$= \boxed{VI\cos\phi}$$

Where, $V$ and $I$ are the rms values of the voltage and current respectively.

**If (ii) $V_C > V_L$**

- The circuit behaves as a capacitive circuit
- The phasor diagram is given below

From diagram

$$OB^2 = OA^2 + AB^2$$

$$V^2 = (V_R)^2 + (V_C - V_L)^2$$

$$V = \sqrt{R^2 + (X_C - X_L)^2}$$

$$\therefore \quad V = \sqrt{(IR)^2 + (IX_C - IX_L)^2}$$

$$I = \frac{V}{\sqrt{R^2 + (X_C - X_L)^2}}$$

$$= \frac{V}{Z}$$

Where Z = Impedance of the circuit

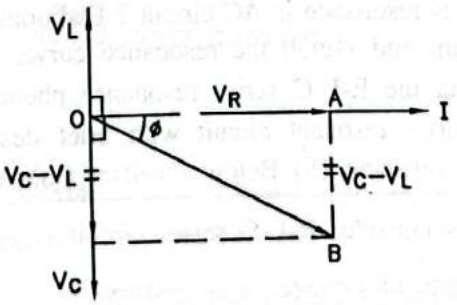


**FIG. 2.56 : PHASOR DIAGRAM OF R-L-C SERIES CIRCUIT $V_C > V_L$**

Scanned with CamScanner

**Power Factor :**

$$\cos\phi = \frac{V_R}{V}$$

$$= \frac{IR}{IZ}$$

$$= \frac{R}{Z}$$

$$= \frac{R}{\sqrt{R^2 + (X_C - X_L)^2}}$$

Thus when $V_C > V_L$, current $I$ leads $V$ by angle $\phi$.

$\therefore$ If $V = V_m \sin \omega t$

$I = I_m \sin(\omega t + \phi)$

$\therefore$ Power consumed, $P = V.i = V_m \sin \omega t \,.\, I_m \sin(\omega t + \phi)$

$$\therefore \quad P = \frac{V_m I_m}{2}[2 \sin \omega t \sin(\omega t + \phi)]$$

$$= \frac{V_m I_m}{2}[\cos\phi - \cos(2\omega t + \phi)]$$

Since the average value of $\cos(2\omega t + \phi)$ is zero.

$$\therefore \quad P = \frac{V_m I_m}{2}\cos\phi$$

$$= \boxed{VI\cos\phi}$$

**Syllabus Topic : Series Resonance**

## 2.23 RESONANCE IN R-L-C SERIES CIRCUIT :

**GTU Questions** **GTU, May-2013,2015, 2016, 2017, 2018, 2019; Dec. 2013, 2016**

1. Explain series resonance circuit. Draw response curve. **[May-2013, 7-Marks]**
2. Explain series resonance circuit. Draw response curve. **[December-2013, 7-Marks]**
3. Prove the condition of resonance for R-L-C AC circuit. Also analyze the phenomena with the help of graph. **[May-2015, 7-Marks]**
4. Prove the condition of resonance for R-L-C AC circuit. **[May-2016, 7-Marks]**
5. What is resonance in AC circuit ? Elaborate resonance in case of series R-L-C circuit with help of phasor diagram and sketch the resonance curve. **[December-2016, 7-Marks]**
6. Explain the R-L-C series resonance phenomena. **[May-2017, 7-Marks]**
7. For series resonant circuit with brief description draw the phasor diagrams for following conditions (i) At resonant (ii) Below resonant (iii) Above resonant. **[May-2019, 3-Marks]**

- Let us consider R-L-C series circuit :
- The applied voltage

$$V = V_R + V_L + V_C$$

$$= IR + j\,IX_L - j\,IX_C$$

$$= I(R + j\,X_L - j\,X_C)$$

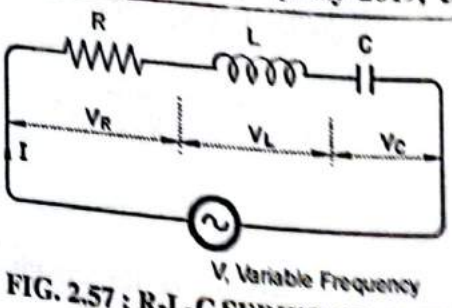


**FIG. 2.57 : R-L-C SERIES CIRCUIT**

Scanned with CamScanner

Impedance $Z = (R + j X_L - j X_C)$

$\therefore$ the magnitude of the impendance is given by

$$|Z| = \sqrt{R^2 + (X_L - X_C)^2}$$

$$= \sqrt{R^2 + \left[\omega L - \frac{1}{\omega C}\right]^2}$$

$$= \sqrt{R^2 + \left[2\pi f L - \frac{1}{2\pi f C}\right]^2}$$

- The circuit is connected to a variable frequency a.c. source
- We know that inductive reactance $X_L$ is directly proportional to the frequency and capacitive reactance $X_C$ is inversely proportional to frequency.
- So if frequency increase, $X_L$ increase while $X_C$ decrease.
- At one frequency the value of inductive reactance $(X_L)$ becomes equal to capacitive reactance $(X_C)$ is called the **resonant frequency**.

So, at resonance

$$X = 0$$

$$\therefore \quad X_L - X_C = 0$$

$$\therefore \quad X_L = X_C$$

$$\therefore \quad \omega_r L = \frac{1}{\omega_r C}$$

$$\therefore \quad \omega_r^2 = \frac{1}{LC}$$

$$\therefore \quad \omega_r = \frac{1}{\sqrt{LC}}$$

$$\therefore \quad 2\pi f_r = \frac{1}{\sqrt{LC}}$$

$$\therefore \quad \boxed{f_r = \frac{1}{2\pi\sqrt{LC}}} \qquad [\because f_r = \text{Resonant Frequency}]$$

under this condition

$$Z = \sqrt{R^2 + X^2}$$

$$= R \qquad [\because X = X_L - X_C = 0]$$

- The impedance becomes minimum and equals $R$ and the current becomes maximum.

$$\boxed{I_{max} = \frac{V}{Z} = \frac{V}{R}} \qquad [\because Z = R]$$

- The circuit behave like a pure resistive circuit because net reactance $(X_L - X_C)$ is zero.
- The power factor of the circuit is unity under resonant condition.

## 2.24 Q-FACTOR OF A SERIES RESONANT CIRCUIT : GTU Dec. 2010, 2017; Jan. 2020

**GTU Questions**

1. Write the equation of qualit factor Q. **[December-2010, 1-Mark]**
2. Define the following term Q factor. **[December-2017, January-2020, 1-Mark]**

Scanned with CamScanner

- The Q-factor of an R-L-C series circuit is given below.
- It is given by the voltage magnification produced in the circuit at resonance.
- We have seen that at resonance, current has maximum value.

$$I_m = \frac{V}{R}, \quad \text{Supply voltage } V = I_m R$$

- Voltage across inductor or capacitor is given by

$$V_C = I_m X_L \quad [\text{or } V_C = I_m X_C]$$

- So Q-factor = Voltage magnification = $\dfrac{\text{Voltage across } L[\text{or } C]}{\text{Applied voltage}}$

$$= \frac{V_L}{V} \text{ or } \frac{V_C}{V}$$

$$= \frac{I_m X_L}{I_m R} \text{ or } \frac{I_m X_C}{I_m R}$$

$$= \frac{X_L}{R} \text{ or } \frac{X_C}{R}$$

$$= \frac{2\pi f_r L}{R} \text{ or } \frac{1}{2\pi f_r CR}$$

$$= \frac{\omega_r \cdot L}{R} \text{ or } \frac{1}{\omega_r CR}$$

but at resonance

$$\omega_r^2 = \frac{1}{LC}$$

$$\therefore \quad \omega_r = \frac{1}{\sqrt{LC}}$$

$$\text{Q-factor} = \frac{1}{\sqrt{LC}} \cdot \frac{L}{R} \quad \text{or} \quad \frac{\sqrt{LC}}{CR}$$

$$= \frac{1}{R}\sqrt{\frac{L}{C}} \qquad = \frac{1}{R}\sqrt{\frac{L}{C}}$$

$$\therefore \quad \boxed{\text{Q-factor} = \frac{1}{R}\sqrt{\frac{L}{C}}}$$

### 2.24.1 Graphic Representation of Series Resonance :

- Suppose an alternating voltage of constant magnitude but variable frequency is applied to an R-L-C circ
- The variation of resistance, inductive reactance, capacitive reactance with frequency are

Scanned with CamScanner

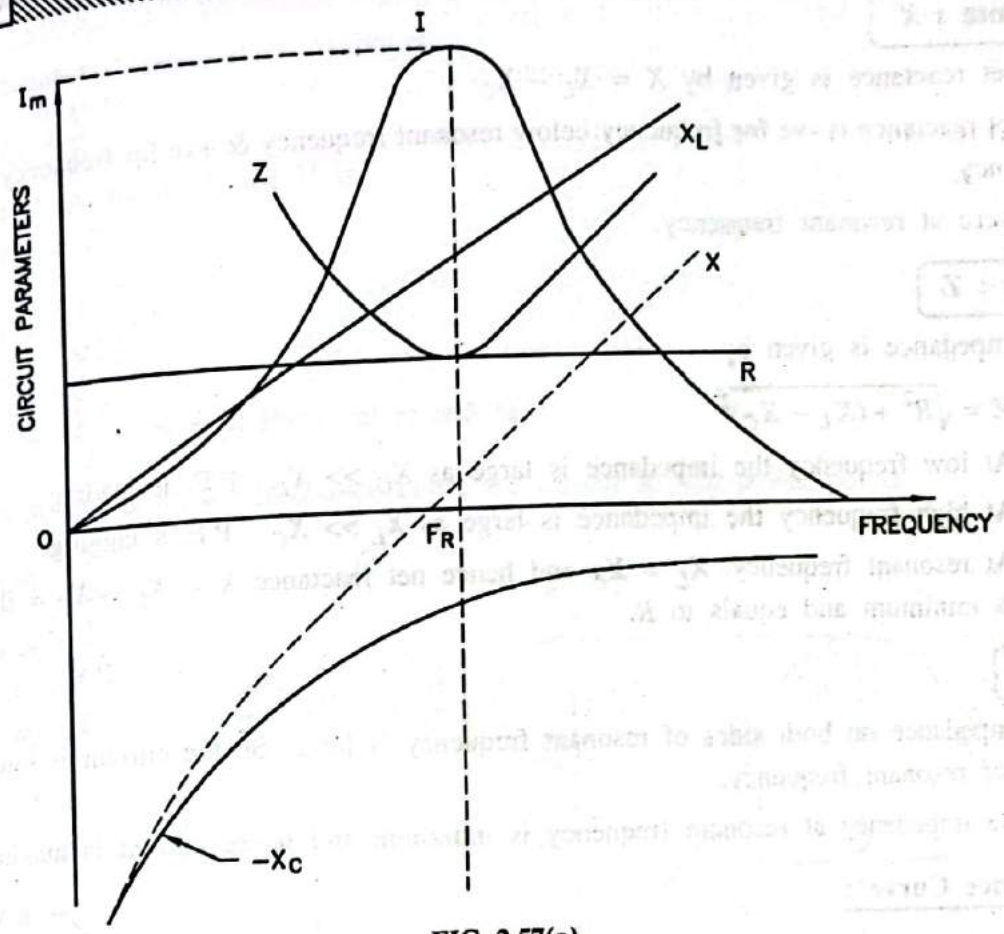


FIG. 2.57(a)

**[1] Resistance :**

- It is independent of frequency
- It is represented by a straight horizontal line.

**[2] Inductive reactance : $X_L$**

- We know that

$$X_L = \omega L = 2\pi f L$$

$$\therefore \quad X_L \propto f$$

- The inductive reactance $X_L$ is directly proportional to the supply frequency.
- So graph is a straight line passing through the origin.

**[3] Capacitive reactance : $X_C$**

- We know that

$$X_C = \frac{1}{\omega C} = \frac{1}{2\pi f C}$$

$$\therefore \quad X_C \propto \frac{1}{f}$$

- Capacitive reactance is inversely proportional to the frequency.
- So capacitive reactance decrease with increase in the frequency.
- So graph is a rectangular hyperbola which is drawn in the farth quadrant because $X_C$ regared as negative.

Scanned with CamScanner

**[4] Net reactance : $X$**

- The net reactance is given by $X = X_L - X_C$
- The net reactance is -ve for frequency below resonant frequency & +ve for frequency greater resonant frequency.
- It is zero at resonant frequency.

**[5] Impedance : Z**

- The impedance is given by

$$Z = \sqrt{R^2 + (X_L - X_C)^2}$$

(i) At low frequency the impedance is large as $X_C >> X_L$. P.F. is leading.

(ii) At high frequency the impedance is large as $X_L >> X_C$. P.F. s lagging.

(iii) At resonant frequency, $X_L = X_C$ and hence net reactance $X = X_L - X_C = 0$. So impedance is minimum and equals to $R$.

**[6] Current :**

- The impedance on both sides of resonant frequency is large. So the current is low value on both sides of resonant frequency.
- But the impedance at resonant frequency is minimum and hence current is maximum.

### 2.24.1.1 Resonance Curve :

- The curve between current and frequency is known as resonance curve.
- The shape for different values of $R$ is shown in Figure.
- For smaller values of $R$ the current – frequency curve (or resonance curve) is sharply peaked. But for larger values of $R$, the curve is flat.

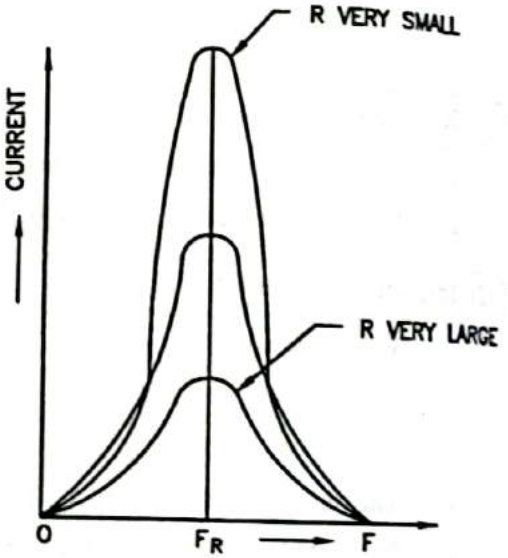


FIG. 2.57(b)

### 2.24.2 Bandwith of Resonant Circuit :

- Bandwith of a circuit is given by the band of frequencies with lies between two points on either side of the resonant frequency. Where current falls to $\frac{1}{\sqrt{2}}$ of its maximum value.
- Selectivities of different resonant circuit are compared in terms of their bandwiths.
- Nerrow bandwith higher selectivity of the circuit.
- From Fig.

Bandwith AB is given by

B.W. $= \Delta f = f_2 - f_1$ or $\Delta\omega = \omega_2 - \omega_1$

Scanned with CamScanner

- At resonance the current is maximum

$$I_m = \frac{V}{R}$$

- Power at the points A and B is

$$P = I^2 R$$

$$= \left[\frac{I_m}{\sqrt{2}}\right]^2 R$$

$$= \frac{I_m^2 R}{2} = \frac{1}{2} \times \text{Power at resonance.}$$

- Points A and B on the resonance curve are known as half-power points.

$$\omega_1 = \omega_r - \frac{R}{2L}$$

$$\omega_2 = \omega_r + \frac{R}{2L}$$

$$\therefore \quad \omega_2 - \omega_1 = \left[\omega_r + \frac{R}{2L}\right] - \left[\omega_r - \frac{R}{2L}\right]$$

$$= \left[\omega_r + \frac{R}{2L} - \omega_r + \frac{R}{2L}\right]$$

$$= \frac{R}{L}$$

$$\therefore \quad 2\pi (f_2 - f_1) = \frac{R}{L}$$

$$\therefore \quad f_2 - f_1 = \frac{R}{2\pi L}$$

$$\therefore \quad \text{Band with} = f_2 - f_1 = \frac{R}{2\pi L}$$

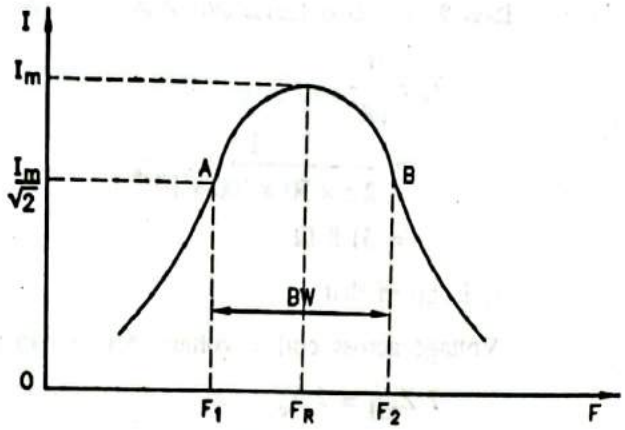


FIG. 2.57(c)

Also $\omega_1 = \omega_r - \frac{R}{2L}$

$$2\pi f_1 = 2\pi f_r - \frac{R}{2L}$$

$$\therefore \quad f_1 = f_r - \frac{R}{4\pi L}$$

Similarly

$$\therefore \quad f_2 = f_r + \frac{R}{4\pi L}$$

Again band with $= \frac{R}{2\pi L}$

$$= \frac{R \times f_r}{2\pi f_r L} \quad \text{[multiplying a dividing by } f_r\text{]}$$

$$= \frac{f_r}{\frac{2\pi f r L}{R}}$$

$$= \frac{f_r}{Q}$$

$$\boxed{\therefore \text{ B.W.} = \frac{\text{Resonant frequency}}{\text{Q} - \text{factor}}}$$



Scanned with CamScanner

**Example-2.24 :**

**A coil of power factor 0.8 is in series with a 100-$\mu$F capacitor. The p.d. across the coil is equal to the p.d. across the capacitor when the combination is connected across a 50 Hz supply. Determine the resistance and inductance of the coil.**

***Solution :***

Given Data :

$C = 100\ \mu F$

p.f. of coil = $\cos\phi = 0.8$

$f = 50$ Hz

R = ?

L = ?

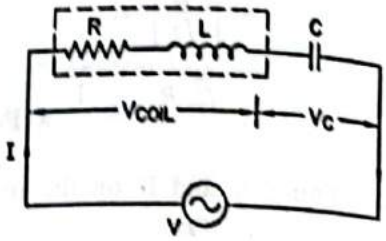


FIG. 2.58

$$X_c = \frac{1}{\omega C}$$

$$= \frac{1}{2\pi \times 50 \times 100 \times 10^{-6}}$$

$$= 31.8\ \Omega$$

It is given that

Voltage across coil = voltage across capacitor

$$I\,Z_{coil} = I\,X_c$$

$$Z_{coil} = X_c = 31.8\ \Omega$$

Resistance of coil $R = Z_{coil} \times \cos\phi$

$$= 31.8 \times 0.8$$

$$= \boxed{25.44\ \Omega}$$

Reactance of coil $X_L = Z_{coil} \times \sin\phi$

$$= 31.8 \times 0.6$$

$$= 19.08\ \Omega$$

$$X_L = 2\pi f L$$

$$\therefore \quad 19.08 = 2\pi\ 50 \times L$$

$$\therefore \quad L = \frac{19.08}{2\pi \times 50}$$

$$= \boxed{0.0607 \text{ Henries}}$$

**Example-2.25 :**

**A series RLC circuit having a resistance of 8 Ω, inductance of 80 mH and capacitance of 100 μF is connected across a 150 V, 50 Hz supply. Calculate (1) the current (2) the power factor (3) the voltage drops in the coil and capacitance.**

**GTU, May-2010**

***Solution :***

$R = 8\ \Omega$

$L = 80$ mH $= 80 \times 10^{-3}$ H

Scanned with CamScanner

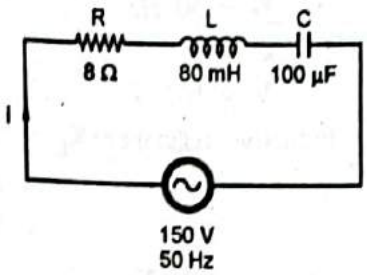


FIG. 2.59

∴ Inductive reactance

$X_L = 2\pi.f.L$

$= 2(\pi)(50)(80 \times 10^{-3})$

$= 25.12\ \Omega$

$C = 100\ \mu F$

$= 100 \times 10^{-6}\ F$

∴ Capactitive rectance $X_C = \dfrac{1}{2\pi f C}$

$= \dfrac{1}{2(\pi)(50)(100 \times 10^{-6})}$

$= 31.85\ \Omega$

Thus $X_C = 31.85\ \Omega$ and $X_L = 25.12\ \Omega$. Since $X_C > X_L$, the capacitive effect is dominant and the power factor will be leading.

Impedance,

$Z = \sqrt{R^2 + (X_C - X_L)^2}$

∴ $Z = \sqrt{(8)^2 + (31.85 - 25.12)^2}$

∴ $Z = 10.45\ \Omega$

∴ Current in the circuit, $I = \dfrac{V}{Z}$

$= \dfrac{150}{10.45}$

$= \boxed{14.35\ A}$

System power factor, $\cos\phi = \dfrac{R}{Z}$

$= \dfrac{8}{10.45}$

$= \boxed{0.7655\ \text{(lead)}}$

Voltage drop across the coil $= V_L = I X_L$

∴ $V_L = I X_L = (14.35)(25.12) = \boxed{360.47\ V}$

Voltage drop across the capacitor $= V_C = I X_C$

$= (14.35)(31.85)$

$= \boxed{457.04\ V}$

**Example-2.26 :**

**A circuit consists of a resistance of 4 Ω, an inductance of 1 H and a variable capacitance in series across a 100 V, 50 Hz supply. Calculate (1) The value of the capacitance to produce resonance. (2) The voltage across capacitor.** **GTU, December-2010**

***Solution :***

Given Data :

$R = 4\ \Omega$

$L = 1\ H$

Scanned with CamScanner

$f = 50$ Hz

C = ?

V = 100 V

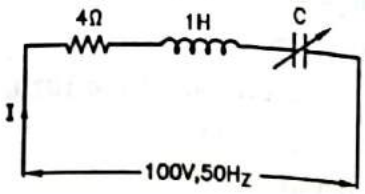


FIG. 2.60

Inductive reactance $X_L = 2\pi.f.L$

$= 2\ (3.14)\ (50)\ (1)$

$= 314\ \Omega$

At resonance, $X_L = X_C$

$\therefore \quad X_C = 314\ \Omega = \dfrac{1}{\omega C} = \dfrac{1}{2\pi f C}$

$\therefore \quad C = \dfrac{1}{2\pi f X_C}$

$= \dfrac{1}{2(3.14)\ (50)\ (314)}$

$= 0.000010$ F

$= \boxed{10\ \mu F}$

Current at resonance $I = \dfrac{V}{R}$

$= \dfrac{100}{4}$

$= 25$ A

$\therefore$ Voltage across capacitor $= I\ X_C$

$= (25)\ (314)$

$= \boxed{7850\ V}$

**Example-2.27 :**

**A resistance R, inductance L = 0.5 H and a capacitance C are connected in series when a voltage $v = 350 \cos (3000\ t - 20°)$ volts is applied to this series combination, the current flowing is $i = 15 \cos (3000\ t - 60°)$ A. Find the values of R and C.**

**GTU, June-2012**

***Solution :***

$v = 350 \cos (3000\ t - 20°)$

$i = 15 \cos (3000\ t - 60°)$

Total impedance of the circuit, $Z = \dfrac{V_m}{I_m}$

$= \dfrac{350}{15}$

$= 23.33\ \Omega$

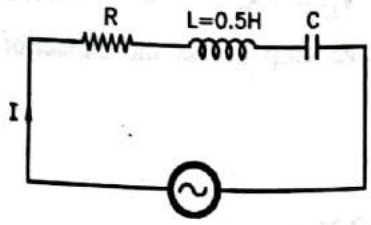


FIG. 2.61

$\omega = 3000$

$\therefore \quad 2\pi f = 3000$

$f = \dfrac{3000}{2\pi}$

$= 477.46$ Hz

Phase difference between $v$ and $i = 60° - 20°$

$= 40°$ lagging

Scanned with CamScanner

Power factor = cos 40°

= 0.766 lagging

$$\cos\phi = \frac{R}{Z}$$

$$R = Z\cos\phi$$

$$= 23.33 \times 0.766$$

$$= \boxed{17.87\ \Omega}$$

$$Z = \sqrt{R^2 + X^2}$$

$$\therefore\ X = \sqrt{Z^2 - R^2}$$

$$= \sqrt{(23.33)^2 - (17.87)^2}$$

$$= 15\ \Omega$$

$$X_L = \omega L$$

$$= 3000 \times 0.5$$

$$= 1500\ \Omega$$

Here the current is lagging i.e. $X_L > X_C$.

$$\therefore\ X = X_L - X_C$$

$$\therefore\ 15 = 1500 - X_C$$

$$\therefore\ X_C = 1485\ \Omega$$

$$X_C = \frac{1}{\omega C}$$

$$\therefore\ C = \frac{1}{\omega \times X_C}$$

$$= \frac{1}{3000 \times 1485}$$

$$= \boxed{0.224\ \mu F}$$

**Example-2.28 :**

**A resistance of 10 Ω an inductance of 0.2 H and a capacitance of 100 μF are connected in series across 220 V, 50 Hz mains. Determine the following : (i) impedance (ii) current (iii) voltage across R, L and C (iv) Power factor.**

**GTU, December-2010, June-2015**

***Solution :***

Given Data :

$R = 10\ \Omega$, $L = 0.2$ H $C = 100\ \mu F = 100 \times 10^{-6}$ F

Inductive reactance, $X_L = \omega L$

$$= 2\pi f L$$

$$= 2\pi \times 50 \times 0.2$$

$$= \boxed{62.8\ \Omega}$$

Capacitive reactance, $X_C = \dfrac{1}{\omega C}$

$$= \frac{1}{314 \times 100 \times 10^{-6}}\ \Omega$$

$$= \boxed{31.85\ \Omega}$$

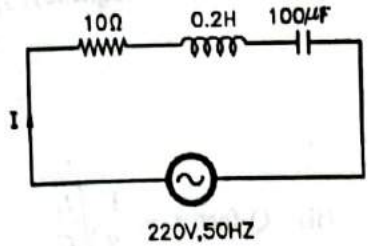


FIG. 2.62

Scanned with CamScanner

Impedance of the circuit, $Z = \sqrt{R^2 + (X_L - X_C)^2}$

$$= \sqrt{10^2 + (62.8 - 31.85)^2}$$

$$= \boxed{32.52\ \Omega}$$

Current in the circuit $I = \frac{V}{Z}$

$$= \frac{220}{32.52}$$

$$= \boxed{6.76\ A}$$

Voltage across R, $V_R = IR$

$$= 6.76 \times 10$$

$$= \boxed{67.6\ V}$$

Voltage across L, $V_L = I\,X_L$

$$= 6.76 \times 62.8$$

$$= \boxed{424.53\ V}$$

Voltage across C, $V_C = I\,X_C$

$$= 6.76 \times 31.85$$

$$= \boxed{215.3\ V}$$

Power factor $= \frac{R}{Z} = \frac{10}{32.52}$

$$= \boxed{0.3075\ \text{lag}}$$

Since $X_L > X_C$, Power factor is lag

**Example-2.29 :**

**A series RLC circuit consists of a resistance of 500 Ω, inductance of 50 mH and a capacitance of 20 pF. Find :**

**(i) the resonance frequency**

**(ii) Q factor of the circuit at resonance**

**GTU, January-2015, May-2018**

***Solution :***

Given Data :

$R = 500\ \Omega$

$L = 50\ mH = 50 \times 10^{-3}\ H$

$C = 20\ pF = 20 \times 10^{-12}\ F$

(i) Resonant frequency, $f_r = \frac{1}{2\pi\sqrt{LC}}$

$$= \frac{1}{2\pi\sqrt{50 \times 10^{-3} \times 20 \times 10^{-12}}}$$

$$= \boxed{159.15\ kHz}$$

(ii) Q-factor $= \frac{1}{R}\sqrt{\frac{L}{C}}$

$$= \frac{1}{500}\sqrt{\frac{50 \times 10^{-3}}{20 \times 10^{-12}}} = \boxed{100}$$

Scanned with CamScanner

**Example-2.29.1 :**

**A series RLC circuit with L = 160 mH, C = 100 μF and R = 40 Ω is connected to a sinusoidal voltage $V_{(t)}$ = 40 sinωt, with ω = 200 rad/sec. Find (i) What is the Impedance of the circuit. (ii) Let the current at any instant in the circuit be $I_{(t)} = I_0 \sin(\phi t - F)$. Find $I_0$ (iii) What is the Phase φ ?**

**Solution :**

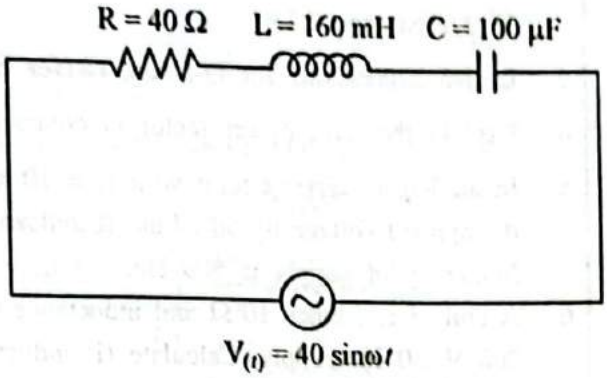


**FIG. 2.62.1**

**1. To find Impedance of the circuit :**

$R = 40\ \Omega$

$\omega = 200$ rad/sec.

$L = 160\ \text{mH} = 160 \times 10^{-3}\ \text{H}$

∴ Inductive Reactance

$$X_L = 2\pi f L$$
$$= \omega L$$
$$= 200 \times 160 \times 10^{-3}$$
$$= \boxed{32\ \Omega}$$

$C = 100\ \mu\text{F} = 100 \times 10^{-6}\ \text{F}$

∴ Capacitive Reactance

$$X_C = \frac{1}{2\pi f C} = \frac{1}{\omega C}$$
$$= \frac{1}{200 \times 100 \times 10^{-6}}$$
$$= \boxed{50\ \Omega}$$

Thus, $X_C = 50\ \Omega$ and $X_L = 32\ \Omega$. So $X_C > X_L$

Impedance

$$Z = \sqrt{R^2 + (X_C - X_L)^2}$$
$$= \sqrt{(40)^2 + (50 - 32)^2}$$
$$= \sqrt{(40)^2 + (18)^2}$$
$$= \boxed{43.86\ \Omega}$$

**2. To Find $I_0$ :**

It is given that votlage at any instant

$$V_{(t)} = 40 \sin\omega t$$

Compare above equation with $V_{(t)} = V_0 \sin\omega t$

∴ $\boxed{V_0 = 40\ \text{V}}$

Current, $I_0 = \dfrac{V_0}{Z} = \dfrac{40}{43.86} = \boxed{0.911\ \text{Amp}}$

**3. To find phase (φ) between the current and voltage :**

$$\cos\phi = \frac{R}{Z} = \frac{40}{43.86}$$

∴ $\cos\phi = 0.911$

∴ $\phi = \cos^{-1}(0.911) = \boxed{24.35°}$

Scanned with CamScanner

## Exercise-2.6

1. Derive expression for impedance, current and power factor for an R-L-C series circuit when supplied with a.c. voltage. Draw also phasor diagram. **(Refer Section-2.22)**
2. Show that the resonant frequency of an R-L-C series circuit is given by $f_r = \frac{1}{2\pi\sqrt{LC}}$. **(Refer Section-2.23)**
3. Derive expressions for Q-factor. **(Refer Section-2.24)**
4. Explain the term power factor in connection with ac circuits. **(Refer Section-2.20)**
5. In an R-L-C series circuit with L = 10 mH, C = 5 μF and unknown resistance R, the current lags the applied voltage by 50°. Find R and voltage across each circuit element. Draw phasor diagram. The frequency of supply is 500 Hz. **[R = 27.09 Ω, 128.68 V, 149.25 V, 302.39 V]**
6. A coil of resistance 10 Ω and inductance 0.1 H is connected in series with a 150 μF capacitor across 200 V, 50 Hz supply. Calculate (i) inductive reactance, capacitive reactance, impedance, current and power factor and (ii) voltage across the coil and capacitor respectivity. **[31.42 Ω, 21.22 Ω, 14 A, 0.7 lag, 461.62 V, 297.08 V]**
7. A series circuit having a resistance of 10 Ω, an inductance of 0.025 H and a variable capacitance is connected to 100 V, 25 Hz supply. Calculate the capacitance when the value of current is 8 A. At this value of capacitance also, calculate (i) the circuit impedance (ii) the circuit power factor and (iii) power consumed. **[556 μF, 12.5 Ω, 0.8 leading, 640 W]**
8. A coil of resistance 10 ohms and an inductance of 1 Hand a capacitance of 15.83 μF are connected in series across 100 V supply. The current drawn in found to be 10 A. Determine the frequency of supply. **[40 Hz]**
9. A resistance R, an inductance L = 0.01 H and a capacitance C are connected in series. When a voltage $v = 400 \cos(3000t - 10°)$ volts is applied to the series combination, the current flowing is $i = 10\sqrt{2} \cos(3000t - 55°)$ amp. Find R and C. **[20 Ω, 33.3 μF]**
10. An ac circuit consisting of an inductive coil *b* of resistance 5 ohms and inductance 0.02 H is connected in series with a resistance R and capacitance C of unknown values. Find the values of R and C, so that voltage $V_b = 2\ V_a$ and $V_b$ and $V_a$ are in quadrature where $V_a$ is the voltage across the combination R and C. Also determine the current drawn and the power factor of the circuit. The applied voltage to the circuit is 220 V, 50 Hz. **[3.14 Ω, 1272 μF, 24.53 A, 0.91 lag]**
11. A series R-L-C circuit has R = 5 ohms, L = 10 mH and C = 10 μF. Calculate the resonant frequency and Q-factor. **[503 Hz, 6.3]**
12. A coil having resistance of 10 Ω and an inductance of 0.4 H is connected in series with a condenser of capacitance 40 μF. A voltage of 200 volts at variable frequency is applied to the combination. At what frequency, will the current be maximum ?

    Calculate this current and voltage drops across the coil and condenser for this frequency. Find the voltage magnification at resonance. **[39.8 Hz, 20 A, 2010 V, 2000 V, 10]**
13. A resistor and a capacitor are connected in series with a variable inductor. When the circuit is connected to a 240 V, 50 Hz supply, the maximum current given by varying the inductance is 0.5 A. At this current, the voltage drop across the capacitor is 250 V. Calculate the values of parameters. Neglect the resistance of the inductor. **[480 Ω, 6.36 μF, 1.59 H]**

Scanned with CamScanner

# A. C. Parallel Circuits

## 2.25 METHODS OF SOLVING PARALLEL CIRCUITS :

- The parallel a.c. circuits can be solved by the following methods :

1. Phasor (vector) method,
2. Admittance method and
3. Complex algebra (or Symbolic) method.

- Depending upon the complexity of the parallel circuit, any one of the above methods can be chosen to solve the circuit.
- Series-parallel circuit can also be solved by the above methods.
- For complicated circuits, complex algebra method is preferred.

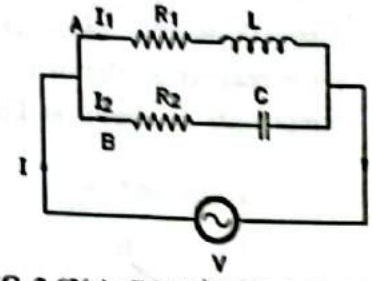


FIG. 2.63(a) : PARALLEL A.C. CIRCUIT WITH TWO BRANCHES

### 2.25.1 Phasor Method :

- Consider the circuit as shown in Fig. 2.63(a).
- Here two series circuits A and B are connected in parallel across an ac supply of $V$ volts.
- Each series circuit is called as branch.
- The branch A is an $R$–$L$ series circuit while branch B is an $R$–$C$ series circuit.
- The voltage across each branch is same and equal to the supply voltage $V$ volts but currents through them are different.

**Branch-A :**

Voltage across branch A = $V$ volt

Impedance of branch-A

$$Z_1 = \sqrt{R_1^2 + X_L^2} \qquad [\because \ X_L = 2\pi f L]$$

The current taken by branch A,

$$\boxed{I_1 = \frac{V}{Z_1}} \qquad \text{... (1)}$$

Power factor of branch A,

$$\cos\phi_1 = \frac{R_1}{Z_1} \quad \text{or}$$

$$\boxed{\phi_1 = \cos^{-1}\left(\frac{R_1}{Z_1}\right)} \qquad \text{... (2)}$$

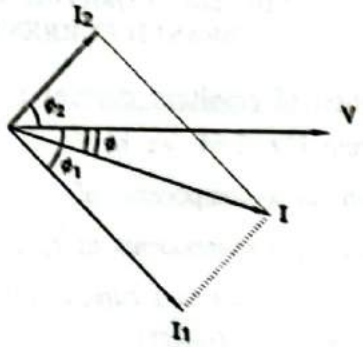


FIG. 2.63(b) : PHASOR DIAGRAM OF CIRCUIT SHOWN IN FIG. 2.63(a)

- Due to $R$–$L$ combination in branch A, current $I_1$ will lag behind the applied voltage $V$ by an angle $\phi_1$. It is shown in Fig. 2.63(b).

**Branch-B :**

Voltage across branch B = $V$ volt

Impedance of branch B, $Z_2 = \sqrt{R_2^2 + X_C^2}$

The current taken by branch B, $\boxed{I_2 = \frac{V}{Z_2}}$ ... (3)

Power factor of branch B, $\cos\phi_2 = \frac{R_2}{Z_2}$ or $\boxed{\phi_2 = \cos^{-1}\left(\frac{R_2}{Z_2}\right)}$ ... (4)



Scanned with CamScanner

- Due to $R$–$C$ combination in branch B, the current $I_2$ will lead the applied voltage $V$ by an angle $\phi_2$. It is shown in Fig. 2.63(b).

**Resultant current :**

- The resultant current $I$ is the vector sum of the currents $I_1$ and $I_2$ as shown in Fig. 2.63(b). There are two methods of obtaining the resultant current.

  (i) By using the parallelogram law of vectors in which the resultant is obtained graphically. The graph gives both the magnitude of the resultant current I and the phase difference $\phi$ between the resultant current $I$ and the applied voltage $V$. Knowing the phase difference $\phi$, the power factor of the circuit can be calculated. This method is time consuming and not accurate too.

  (ii) Alternatively by resolving the branch currents $I_1$ and $I_2$ into their $x$–components and $y$–components as shown in Fig. 2.64 and then obtaining the resultant current by combining these components as shown in Fig. 2.65.

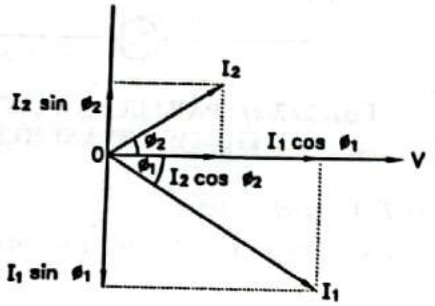


**FIG. 2.64 : COMPONENTS OF BRANCH CURRENTS**

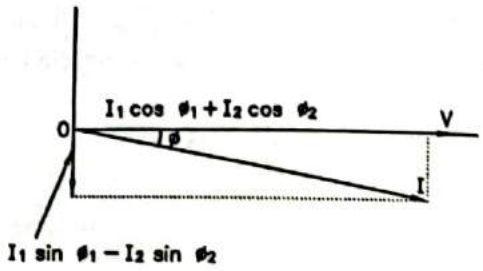


**FIG. 2.65 : RESULTANT OF BRANCH CURRENTS**

**Estimation of resultant current :**

- From Fig. 2.64, we have

  Sum of x–components of $I_1$ and $I_2 = I_1 \cos \phi_1 + I_2 \cos \phi_2$ ... (5)

  Sum of y–components of $I_1$ and $I_2 = I_2 \sin \phi_2 - I_1 \sin \phi_1$ ... (6)

- If $I$ is the resultant current and $\phi$ is its phase angle, its x–component and y–component must be equal to these components.

$$\therefore \quad I \cos \phi = I_1 \cos \phi_1 + I_2 \cos \phi_2 \text{ and} \quad \text{... (7)}$$

$$I \sin \phi = I_2 \sin \phi_2 - I_1 \sin \phi_1 \quad \text{... (8)}$$

$$\therefore \quad I = \sqrt{I^2 \cos^2 \phi + I^2 \sin^2 \phi}$$

$$= \sqrt{[(I_1 \cos\phi_1 + I_2 \cos\phi_2)^2 + (I_2 \sin\phi_2 - I_1 \sin\phi_1)^2]} \quad \text{... (9)}$$

$$= \boxed{\sqrt{(x-\text{comp.})^2 + (y-\text{comp.})^2}}$$

$$\text{and} \quad \tan \phi = \frac{I_2 \sin \phi_2 - I_1 \sin \phi_1}{I_1 \cos \phi_1 + I_2 \cos \phi_2} = \frac{y-comp.}{x-comp.} \quad \text{... (10)}$$

- If $\tan \phi$ is positive, current leads and if $\tan \phi$ is negative, current lags behind the applied voltage $V$. Power factor of the whole circuit is given by

$$\boxed{\cos \phi = \frac{I_1 \cos \phi_1 + I_2 \cos \phi_2}{I}} \quad \text{... (11)}$$

Scanned with CamScanner

- In parallel circuits, the applied voltage $V$ is always taken as reference phasor while drawing the phasor diagram.

### 2.25.2 Admittance Method :

- Consider a circuit having three impedances $Z_1$, $Z_2$ and $Z_3$ in parallel as shown in Fig. 2.66.

Using Kirchhoff's current law.

$$I = I_1 + I_2 + I_3 \quad \text{(vectorially)}$$

$$\therefore \frac{V}{Z_{eq}} = \frac{V}{Z_1} + \frac{V}{Z_2} + \frac{V}{Z_3}$$

$$\therefore \frac{1}{Z_{eq}} = \frac{1}{Z_1} + \frac{1}{Z_2} + \frac{1}{Z_3}$$

$$\boxed{Y_{eq} = Y_1 + Y_2 + Y_3} \quad \text{... (1)}$$

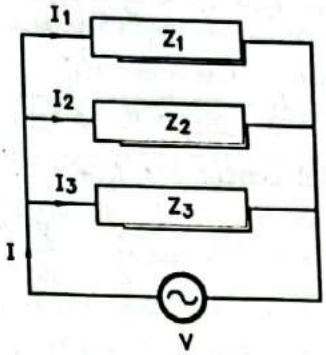


FIG. 2.66 : PARALLEL CIRCUIT

- Thus when two or more admittances are in parallel, equivalent admittance is the sum of the individual admittances.

If $Y_1 = G_1 + j\,B_1$ $\quad Y_2 = G_2 + j\,B_2$, $\quad Y_3 = G_3 + j\,B_3$, then

$$Y_{eq} = (G_1 + j\,B_1) + (G_2 + j\,B_2) + (G_3 + j\,B_3)$$

$$= (G_1 + G_2 + G_3) + j\,(B_1 + B_2 + B_3)$$

$$= \boxed{G_{eq} + j\,B_{eq}} \quad \text{... (2)}$$

Where $G_{eq} = G_1 + G_2 + G_3$

= sum of individual conductances

= equivalent conductance of the circuit.

and $B_{eq} = B_1 + B_2 + B_3$

= sum of individual susceptances

= equivalent susceptance of the circuit

Thus total admittance, $Y_{eq} = \sqrt{G_{eq}^2 + B_{eq}^2}$

Circuit current, $\boxed{I = \frac{V}{Z_{eq}} = V\,Y_{eq}}$ ... (3)

Power factor, $\boxed{\cos\phi = \frac{G_{eq}}{Y_{eq}}}$ ... (4)

Branch currents are :

$I_1 = V\,Y_1$ Where $Y_1 = \sqrt{G_1^2 + B_1^2}$ ... (5)

$I_2 = V\,Y_2$ $\quad Y_2 = \sqrt{G_2^2 + B_2^2}$ ... (6)

$I_3 = V\,Y_3$ $\quad Y_3 = \sqrt{G_3^2 + B_3^2}$ ... (7)

Similarly, $\cos\phi_1 = \frac{G_1}{Y_1}$, $\cos\phi_2 = \frac{G_2}{Y_2}$ and $\cos\phi_3 = \frac{G_3}{Y_3}$ ... (8)

Scanned with CamScanner

### 2.25.3 Complex Algebra Method :

- Consider the Fig. 2.67 where two impedances $Z_1$ and $Z_2$ are connected in parallel. The potential difference across them is same.

$$\therefore I_1 = \frac{V}{Z_1} = \frac{V}{R_1 + jX_{L1}}$$

$$I_2 = \frac{V}{Z_2} = \frac{V}{R_2 + jX_{L2}}$$

Total current $I = I_1 + I_2$ (vectorially)

$$= \frac{V}{Z_1} + \frac{V}{Z_2}$$

$$= V\left[\frac{1}{Z_1} + \frac{1}{Z_2}\right] = \frac{V}{Z_{eq}}$$

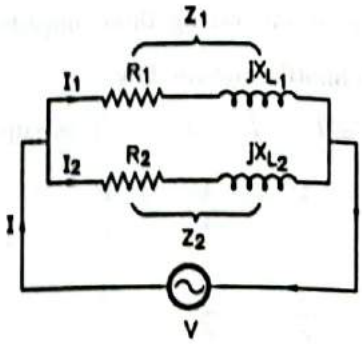


FIG. 2.67 : PARALLEL CIRCUIT

Where $\frac{1}{Z_{eq}} = \frac{1}{Z_1} + \frac{1}{Z_2} = \frac{Z_1 + Z_2}{Z_1 Z_2}$ or $Z_{eq} = \frac{Z_1 Z_2}{Z_1 + Z_2}$

Thus total current, $\boxed{I = \frac{V}{Z_{eq}} \text{ or } = V Y_{eq}}$

- Similarly for circuit of Fig. 2.68

$$Z_1 = R_1 + j X_L$$

$$Z_2 = R_2 - j X_C$$

Total impedance, $Z_{eq} = \frac{Z_1 Z_2}{Z_1 + Z_2}$

Total current, $I = \frac{V}{Z_{eq}} = V Y_{eq}$

Branch current, $I_1 = \frac{V}{Z_1} = V Y_1$

Branch current, $I_2 = \frac{V}{Z_2} = V Y_2$

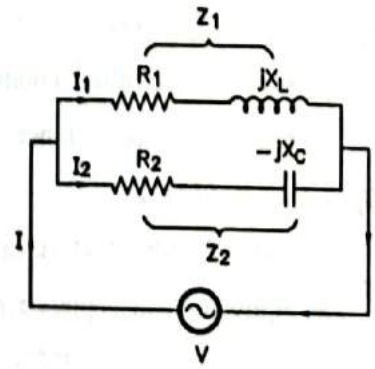


FIG. 2.68 : PARALLEL CIRCUIT

If $V = V \angle 0$, and $Y_{eq} = Y \angle \phi$,

Then $I = VY_{eq} = VY \angle \phi$

In general if $V = V \angle \alpha$, and $Y_{eq} = Y \angle \beta$, then

$$\boxed{I = V Y_{eq} = V Y \angle \alpha + \beta}$$

- Hence it is to be noted that when vector voltage is multiplied by admittance either in complex or polar form, the result is vector current in its proper phase relation with respect to the voltage regardless of the axis to which voltage vector may have been referred to.

Scanned with CamScanner

**Syllabus Topic :** Parallel Resonance

## 2.26 RESONANCE IN PARALLEL CIRCUIT :

**GTU, Jan. 2010; Dec. 2011, 2013, 2015, 2017**

**GTU Questions**

1. Explain the phenomena of resonance in a.c. parallel circuit. Derive the mathematical expression of resonant frequency. Sketch the graphical representation of parallel resonance. **[January-2010, 7-Marks]**
2. An inductive coil of resistance R and inductance L is connected in parallel with capacitor of C. Derive an expression for the resonant frequency and Q factor. **[December-2011, 2013, 7-Marks]**
4. Prove the condition of resonance for R-L-C parallel AC circuit. Also analyze the phenomena with the help graph. **[December-2015, 7-Marks]**
4. Prove the conduction of resonance for a case of a coil in parallel with a capacitor. Also analyze the phenomena with the help of graph. **[December-2017, 7-Marks]**

- In *R–L–C* series circuit, electrical resonance takes place when the voltage across the inductance is equal to the voltage across the capacitance i.e. when $X_L = X_C$.
- Alternatively, resonance takes place when the power factor of the circuit becomes unity. This is the basic condition of resonance. It remains the same for parallel circuits also.
- Thus resonance will occur in parallel circuit when the power factor of the entire circuit becomes unity.
- Fig. 2.69 shows the circuit consisting of an inductive coil in parallel with a capacitor. The corresponding phasor diagram is shown in Fig. 2.70.

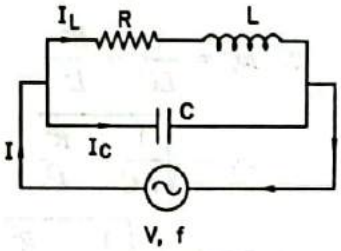


**FIG. 2.69 : RESONANT CIRCUIT**

- For parallel circuit, the applied voltage is taken as reference phasor. The current drawn by an inductive coil lags the applied voltage by an angle $\phi_L$. It can be resolved into two components.
- The active component = $I_L \cos \phi_L$ and the reactive component = $I_L \sin \phi_L$. The current $I_C$ drawn by capacitor leads the applied voltage by 90°.
- Now power factor of the entire circuit becomes unity when the total current drawn by entire circuit is in phase with the applied voltage.
- This will happen only when the current drawn by the capacitive branch, $I_C$ equals the reactive component of current of the inductive branch.

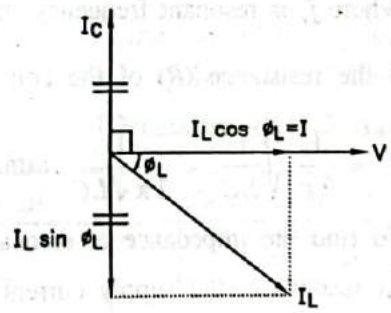


**FIG. 2.70 : PHASOR DIAGRAM**

- Hence for resonance to take place, the necessary condition is

$$\boxed{I_C = I_L \sin \phi_L} \quad \text{....(1)}$$

Current in capacitive branch, $\boxed{I_C = \dfrac{V}{X_C}}$ and ... (2)

Current in inductive branch $I_L = \dfrac{V}{Z_L}$ ... (3)

where $Z_L$ = impedance of the inductive branch

$$= R + j X_L = \sqrt{R^2 + X_L^2} \quad \text{(magnitude)} \quad \text{... (4)}$$

Scanned with CamScanner

Angle of lag $\phi_L = \tan^{-1}\frac{X_L}{R}$ ... (5)

and $\sin\phi_L = \frac{X_L}{Z_L}$ ... (6)

Now $\boxed{I_L \sin\phi_L = \frac{V}{Z_L} \times \frac{X_L}{Z_L} = \frac{V X_L}{Z_L^2}}$ ... (7)

Now substituting equations (2) and (7) in equation (1), we get

$$\frac{V}{X_C} = \frac{V X_L}{Z_L^2}$$

$$\therefore Z_L^2 = X_L X_C \quad \text{... (8)}$$

$$\therefore R^2 + (\omega_r L)^2 = \omega_r L \frac{1}{\omega_r C} = \frac{L}{C}$$

$$\therefore (\omega_r L)^2 = \frac{L}{C} - R^2$$

$$\therefore \omega_r^2 L^2 = \frac{L}{C} - \frac{R^2}{1}$$

$$\therefore \omega_r^2 = \frac{1}{LC} - \frac{R^2}{L^2}$$

$$\therefore \omega_r = \sqrt{\frac{1}{LC} - \frac{R^2}{L^2}}$$

$$\therefore 2\pi f_r = \sqrt{\frac{1}{LC} - \frac{R^2}{L^2}}$$

$$\therefore \boxed{f_r = \frac{1}{2\pi}\sqrt{\frac{1}{LC} - \frac{R^2}{L^2}}} \quad \text{... (9)}$$

- Where $f_r$ is resonant frequency in Hertz. The expression is different from that of series circuit. However if the resistance ($R$) of the coil is negligible, $\frac{R^2}{L^2}$ in the equation of $f_r$ will tend to zero.

  $f_r \approx \frac{1}{2\pi}\sqrt{\frac{1}{LC}} = \frac{1}{2\pi\sqrt{LC}}$ same as for series circuit.

- To find the impedance at resonance, we make use of the equation $I = I_L \cos\phi$.
- At resonance, the supply current I will be in phase with the supply voltage V.

Resonant current, $I = I_L \cos\phi$

$$\therefore \frac{V}{Z} = \frac{V}{Z_L} \cdot \frac{R}{Z_L}$$

where, Z = equivalent impedance of the circuit

$Z_L$ = impedance of the coil

R = resistance of the coil.

$$\therefore \frac{1}{Z} = \frac{R}{Z_L^2}$$

Scanned with CamScanner

But $Z_L^2 = X_L \cdot X_C = 2\pi f L \cdot \frac{1}{2\pi f C} = \frac{L}{C}$ [from equation (8)]

$\therefore \frac{1}{Z} = \frac{R}{L/C} = \frac{RC}{L}$

$\therefore Z = \frac{L}{RC}$

Thus, the circuit impedance at resonance

$$\boxed{Z = \frac{L}{RC}}$$

- The impedance during parallel resonance is called the dynamic impedance. Since at resonance I is an phase with V, we can say that the dynamic impedance $Z = \frac{L}{RC}$ is purely resistive.

$\therefore$ The resultant current $\boxed{I = \frac{V}{Z} = \frac{V}{L/RC}}$

- The impedance during parallel resonance is very large because $\frac{L}{C}$ has a very large value at that time.
- Thus, the impedance during resonance is maximum.

$\therefore \boxed{I = \frac{V}{Z} \text{ will be minimum}}$

$\therefore$ Q-factor $= \frac{I_C}{I} = \frac{I_L \sin\phi_L}{I_L \cos\phi_L} = \tan\phi_L = \boxed{\frac{X_L}{R} = \frac{2\pi f_r L}{R}}$

## 2.7 COMPARISON BETWEEN SERIES AND PARALLEL RESONANCE :

**GTU, April-2010; May-2011; December-2014, 2020**

**GTU Questions**

1. Compare series and parallel resonance. **[April-2010, December-2020, 4-Marks]**
2. Give comparison of series and parallel resonance in R-L-C A.C circuit. Derive expression of quality factor, Q for series R-L-C circuit. **[May-2011, 7-Marks]**
3. Compare series and parallel resonance. **[December-2014, 3-Marks]**

| Sr. No. | Description | Series circuit | Parallel circuit |
|---|---|---|---|
| 1. | Resonant frequency, $f_r$ | $\frac{1}{2\pi\sqrt{LC}}$ | $\frac{1}{2\pi}\sqrt{\frac{1}{LC} - \frac{R^2}{L^2}}$ |
| 2. | Impedance at resonance | Minimum | Maximum |
| 3. | Effective impedance at resonance | $R$ | $\frac{L}{CR}$ |
| 4. | Current at resonance | Maximum $\left(= \frac{V}{R}\right)$ | Minimum $\left(= \frac{V}{L/CR}\right)$ |
| 5. | Power factor at resonance | unity | unity |
| 6. | It magnifies at resonance | voltage | current |
| 7. | Magnification at resonance (Q - factor) | $\frac{\omega_r L}{R}$ | $\frac{\omega_r L}{R}$ |

Scanned with CamScanner

**Example-2.30 :**

**Find the current in $z_1$ and $z_2$ respectively when they are connected in parallel and supplied by 230 volt rms :**

$$z_1 = 3 + j\,4\ \Omega$$
$$z_2 = 3 - j\,4\ \Omega$$

**Find total current drawn from supply and p.f. at supply terminals.** **GTU, May-2009**

***Solution :***

Given Data :

$Z_1 = 3 + j4\ \Omega$ $\qquad$ $V = 230.V$

$Z_2 = 3 - j4\ \Omega$ $\qquad$ $= 230 \angle 0°$

$$Y_1 = \frac{1}{Z_1} = \frac{1}{3+j4} = \frac{1}{3+j4} \times \frac{3-j4}{3-j4} = \frac{3-j4}{9+16}$$

$= (0.12 - j\ 0.16)\ \mho$

$$Y_2 = \frac{1}{Z_2} = \frac{1}{3-j4} = \frac{1}{3-j4} \times \frac{3+j4}{3-j4} = \frac{3+j4}{25}$$

$= (0.12 + j\ 0.16)\ \mho$

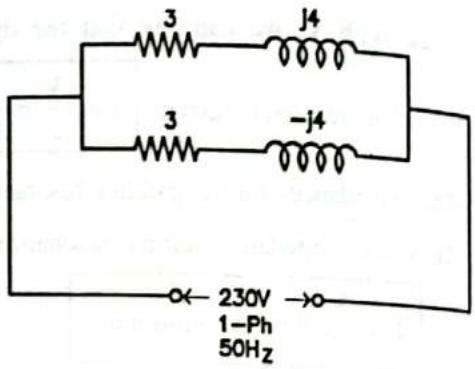


FIG. 2.71

Total admittance

$Y_{eq} = Y_1 + Y_2$

$= 0.12 - j\ 0.16 + 0.12 + j\ 0.16$

$= 0.24\ \mho$

$I_1 = VY_1$

$= 230 \times \angle 0° \times (0.12 - j\ 0.16)$

$= 230 \times \angle 0° \times 0.2 \angle -53.13°$

$= 46 \angle -53.13°$ Amp

$I_2 = VY_2$

$= 230 \angle 0° \times (0.12 + j\ 0.16)$

$= 230 \angle 0° \times 0.2 \angle 53.13°$

$= 46 \angle 53.13°$ Amp

Total current

$I = V\ Y_{eq}$

$= 230 \angle 0° \times 0.24 \angle 0°$

$= \boxed{55.2 \angle 0°\ \text{Amp.}}$

Power factor = cos (0) = $\boxed{1}$

- The phasor diagram is as under.

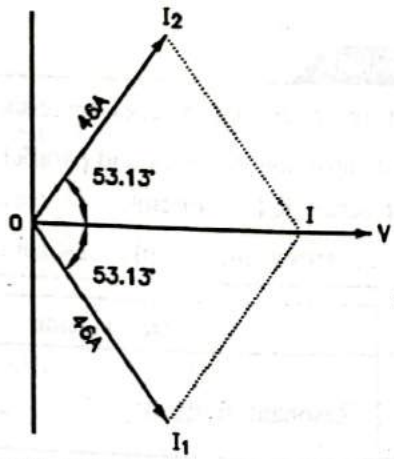


FIG. 2.72 : PHASOR DIAGRAM OF FIG. 2.71

**Example-2.31 :**

**A 10 Ω resistor, a 15.9 mH inductor and 159 μF capacitor are connected in parallel to a 200 V, 50 Hz source. Calculate the supply current and power factor.**

***Solution :***

Given Data :

$R = 10\ \Omega$, $\quad L = 15.9$ mH, $\quad C = 159\ \mu F$

Scanned with CamScanner

$X_L = \omega L$

$= 2\pi f L$

$= 2\pi \times 50 \times 15.9 \times 10^{-3}\ \Omega$

$= 5\ \Omega$

$X_C = \dfrac{1}{\omega C}$

$= \dfrac{1}{2\pi \times 50 \times 159 \times 10^{-6}}$

$= 20\ \Omega$

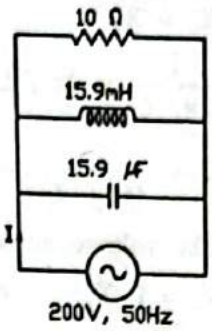


FIG. 2.73

$Z_1 = 10\ \Omega$

$\therefore\ Y_1 = \dfrac{1}{Z_1} = \dfrac{1}{10} = \boxed{0.1\ \mho}$

$Z_2 = j\,X_L = j\,5\ \Omega$

$\therefore\ Y_2 = \dfrac{1}{Z_2} = \dfrac{1}{j5} = \boxed{-j0.2\ \mho}$

$Z_3 = -j\,X_C = -j\,20\ \Omega$

$\therefore\ Y_3 = \dfrac{1}{Z_3} = \dfrac{1}{-j20}$

$= \boxed{j\,0.05\ \mho}$

Total admittance, $Y_{eq} = Y_1 + Y_2 + Y_3$

$= 0.1 - j\,0.2 + j\,0.05$

$= 0.1 - j\,0.15$

$= 0.1802 \angle -56.3°\ \mho$

If $\quad V = 200 \angle 0$

$Y_{eq} = 0.1802 \angle -56.3°\ \mho$

$\therefore$ Supply current, $I = VY_{eq}$

$= 200 \angle 0 \times 0.1802 \angle -56.3°$

$= \boxed{36.04 \angle -56.3°}$

Power factor $= \cos\phi$

$= \cos(-56.3)°$

$= \boxed{0.554\ (\text{lag})}$

**Example-2.32 :**

**A circuit consists of a resistance of 4 Ω and inductance of 1H and a variable capacitance in series across a 100 V, 50 Hz supply calaculate (1) the value of capacitance to produce resonance (2) the voltage across capacitor.**

**GTU, December-2010**

*Solution :*

Given Data :

R = 4 Ω, L = 1H, V = 100 V, $f$ = 50 Hz



Scanned with CamScanner

**(1) The value of capacitance to produce resonance :**

$$X_c = X_L$$

$$\frac{1}{2\pi f.C} = 2\pi f L$$

$$C = \frac{1}{4\pi^2 f^2 L} = \frac{1}{4\pi^2 (50)^2 \times (1)} = \boxed{10.13\ \mu F}$$

**(2) The voltage across capacitor :**

$V_c = I \cdot X_c$ where, I is the current at resonant

At resonant $Z = R$ $\therefore$ $I = \frac{V}{R} = \frac{100}{4} = 25A$

So $V_c = 25 \times \left(\frac{1}{2\pi f C}\right)$

$$\therefore \quad V_c = 25 \left(\frac{1}{2\pi \times 50 \times 10.13\,5 \times 10^{-6}}\right)$$

$$\therefore \quad \boxed{V_c = 7855.62\ V}$$

**Example-2.33 :**

**A circuit having two impedances of $Z_1 = 8 + j\,15\ \Omega$ and $Z_2 = 6 - j\,8\ \Omega$ in parallel, is connected to a single phase ac supply and the current drawn is 10 A. Find each branch current, both in magnitude and phase, and also the supply voltage.**

***Solution :***

$$Z_1 = 8 + j\,15\ \Omega$$

$\therefore$ Admittance $Y_1 = \frac{1}{Z_1} = \frac{1}{8 + j15}$

$$\therefore \quad Y_1 = \frac{8 - j15}{289} = (0.027 - j\,0.052)\ \mho$$

$$= 0.0586 \angle -62.56°$$

Similarly, $Z_2 = 6 - j\,8\ \Omega$

$$\therefore \quad Y_2 = \frac{1}{Z_2} = \frac{1}{6 - j8}$$

$$\therefore \quad Y_2 = \frac{6 + j8}{100} = (0.06 + j\,0.08)\ \mho = 0.1 \angle 53.13°$$

Since $Z_1$ and $Z_2$ are in parallel, net impedance $\frac{1}{Z_{eq}} = \frac{1}{Z_1} + \frac{1}{Z_2}$

$\therefore$ Net admittance, $Y_{eq} = Y_1 + Y_2$

$$\therefore \quad Y_{eq} = (0.027 - j\,0.052) + (0.06 + j\,0.08)$$

$$\therefore \quad Y_{eq} = 0.087 + j\,0.028$$

$$= 0.09 \angle 17.84°$$

Now, supply current 10 A = $10 \angle 0°$ i.e. reference.

$\therefore$ Supply voltage $V = I Z_{eq} = \frac{I}{Y_{eq}} = \frac{10 \angle 0°}{0.09 \angle 17.84°} = 111.11 \angle -17.84°$

Say, current through $Y_1$ is $I_1$

Scanned with CamScanner

$\therefore \quad I_1 = VY_1$

$= (111.11 \angle -17.84°)\ (0.0586 \angle -62.56°)$

$\therefore \quad \boxed{I_1 = 6.51 \angle -80.4° \text{ Amp}}$

Let $I_2$ be current through $Y_2$

$\therefore \quad I_2 = VY_2$

$= (111.11 \angle -17.84°)\ (0.1 \angle 53.13°)$

$= \boxed{11.11 \angle 35.29° \text{ Amp}}$

**Example-2.34 :**

**Two impedance $Z_1 = (10 + j\,15)\ \Omega$ and $Z_2 = (6 - j8)\ \Omega$ are connected in parallel and this combination takes 20 A. Find the supply voltage.** **GTU, December-2010**

***Solution :***

$Z_1 = (10 + j\ 15)\ \Omega$

$\therefore$ Admittance $Y_1 = \dfrac{1}{Z_1} = \dfrac{1}{10 + j15} \times \dfrac{10 - j15}{10 - j15}$

$= \dfrac{10 - j15}{10^2 + 15^2}$

$= \dfrac{10 - j15}{325}$

$= (0.03 - j\ 0.046)\ \mho$

$= 0.055 \angle -56.89°$

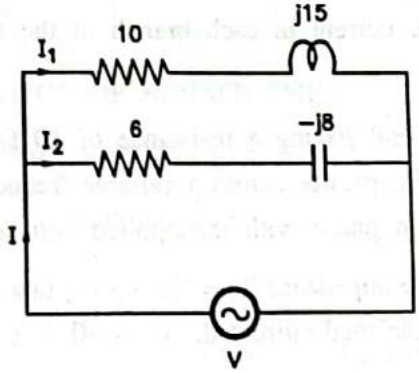


FIG. 2.74

Similarly,

$Z_2 = (16 - j8)\ \Omega$

$\therefore$ Admittance $Y_2 = \dfrac{1}{Z_2}$

$= \dfrac{1}{6 - j8}$

$= \dfrac{1}{6 - j8} \times \dfrac{6 + j8}{6 + j8}$

$= \dfrac{6 + j8}{6^2 + 8^2}$

$= \dfrac{6 + j8}{100}$

$= (0.06 + j\ 0.08)\ \mho$

$\therefore \quad Y_2 = 0.1 \angle 53.13°$

$\therefore$ Net admittance $Y_{eq} = Y_1 + Y_2$

$= (0.03 - j\ 0.046) + (0.06 + j\ 0.08)$

$= 0.09 + j\ 0.034$

$= 0.096 \angle 20.69°$

Scanned with CamScanner

Supply current = 20 A

Say $I = 20 \angle 0°$

$\therefore$ Supply voltage $V = \dfrac{I}{Y_{eq}} = \dfrac{20 \angle 0°}{0.096 \angle 20.69°}$

$\therefore$ $\boxed{V = 208.33 \angle -20.69° \text{ V}}$

## Exercise-2.7

1. A coil of inductance 31.8 mH and resistance of 10 Ω is connected in parallel with a capacitor across a 250 V, 50 Hz supply. Determine the value of the capacitance if no reactive current is taken from the supply. **[159 μF]**
2. A series circuit consisting of a coil having R = 30 Ω and L = 0.58 H and a capacitor resonates at a frequency of 48 Hz. Calculate the capacitance of a capacitor which when connected in parallel with this circuit will increase the resonant frequency to 60 Hz. Calculate in later case the total current and the current in each branch of the circuit if the line voltage is 100 V. **[32.8 μF, 0.546 A, 1.35 A, 1.235 A]**
3. A coil having a resistance of 10 Ω and an inductance of 0.1 H is connected in parallel with a 50 μF capacitor across a variable frequency source. Calculate the frequency at which the resultant current is in phase with the applied voltage and corresponding value of Q-factor. **[69.4 Hz, 4.36]**
4. Two impedance $Z_1 = (10 + j\,15)$ Ω and $Z_2 = (5 - j\,8)$ Ω are connected in parallel across a voltage source. If the total current drawn is 10 A, calculate (a) currents in $Z_1$ and $Z_2$. (b) the applied voltage. **[(0.692 – j 5.66) A, (9.31 + j 5.66) A, (91.8 – j 46.2) V]**
5. Two impedance $Z_A = (10 + j\,31)$ Ω and $Z_B = (10 + R) + j\,(31.34 - X_C)$ Ω are connected in parallel across a single phase ac supply. The current taken by the branches A and B are equal in magnitude and the phase angle between them is 90°. Calculate (i) the values of R and $X_C$ and (ii) the phase difference of branch currents with respect to the applied voltage. **[21.4 Ω, 41.47 Ω, $\phi_A$ = 72.3°, $\phi_B$ = 17.67°]**
6. A parallel circuit has the parameters of the branches as given below,
   (i) a coil of resistance 20 Ω and inductance 0.07 H.
   (ii) a resistance of 50 Ω in series with a capacitance of 60 μF.
   Calculate the line current and power factor when the circuit is connected to a 230 V, 50 Hz supply. **[8.13 A, 0.91 lag]**
7. Three impedance ($Z_1 = 8 + j\,6$) Ω, $Z_2 = (6 + j\,8)$ Ω and $Z_3 = (3 - j\,4)$ Ω are connected in parallel across 100 V ac supply. Calculate (i) total admittance, conductance and susceptance of the whole circuit (ii) the total current, power factor and power. **[0.2807 S, 0.28 S, 0.02 S, 26.1 A, 0.996, 2600 W]**

Scanned with CamScanner

# UNIT-II

# THREE PHASE A.C. CIRCUIT

## Three Phase A.C. Circuit

### 2.28 GENERATION OF THREE PHASE EMF :

NIKOLA TESLA (1856-1943)

**Nikola Tesla (1856-1943)**

He was American Electrical Engineer. He patented AC induction motor and transformer. Tesla is also known for his high-voltage, high-frequency power experiments in New York and Colorado Springs which included patented devices and theoretical work used in the invention of radio communication.

- Consider an elementary 3-phase, two pole A.C. Generator as shown in Fig. 2.75.

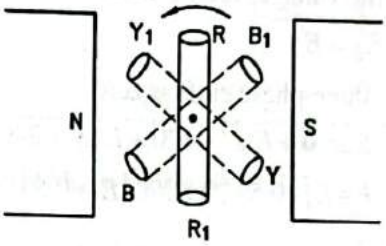


**FIG. 2.75 : GENERATION OF 3-PHASE EMF**

- It has three armature coils R $R_1$, Y $Y_1$ and B $B_1$.
- Their axes are displaced from one an other by 120 electrical degree in space.
- Consider the rotation of the windings in counter clockwise direction with constant angular velocity in a uniform magnetic field between the poles *N* and *S*.
- The emfs are generated in the three coils in accordance with Faraday's law of electromagnetic induction.
- Consider the position of the coil $RR_1$ as shown in Fig. 2.75. In this position emf in the coil R $R_1$ is zero.
- The emf in the coil becomes maximum when the coil has moved through 90° from the position shown in Fig. 2.75.
- With further rotation of 90° the emf becomes zero thus completing the half cycle. The emf is negative maximum when the coil has moved to a position of 270° from its initial position and again becomes zero at 360°.
- The variation of emf with angular displacement is shown in Fig. 2.76.
- Coil Y $Y_1$ is exactly similar but fixed at 120° with respect to the coil R $R_1$. So emf generated has exactly the same wave shape as that of coil $RR_1$ but lags by 120°.
- Similarly the emf generated in coil B $B_1$ will also have the same wave shape but lagging by 240° with respect to the emf generated in the coil R $R_1$.
- The waveforms of the emfs generated in the coils $YY_1$ and B $B_1$ have been shown by dotted lines in Fig. 2.76.

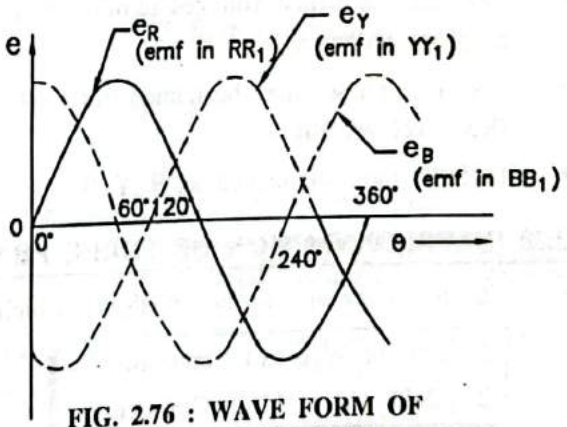


**FIG. 2.76 : WAVE FORM OF THREE PHASE EMF**

Scanned with CamScanner

- The instantaneous emfs in the coils R $R_1$, $YY_1$ and B $B_1$ are given by

Mathematically,

$$e_R = E_m \sin \omega t$$
$$e_Y = E_m \sin (\omega t - 120°)$$
$$e_B = E_m \sin (\omega t - 240°)$$

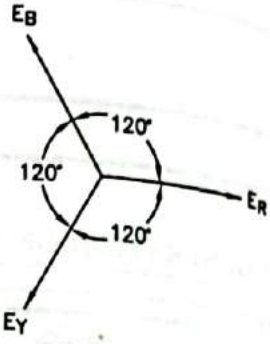


FIG. 2.77 : PHASOR DIAGRAM OF THREE PHASE EMFS

- The phasor diagram of rms values of emfs is shown in Fig. 2.77. If we consider $E_R$ as the reference emf, then

$$E_R = E \angle 0°,\ E_Y = E \angle -120° \text{ and } E_B = E \angle -240°$$

It is assumed that the voltages are balanced

$$E_R = E_Y = E_B = E$$

and the sum of the three-phase emfs is zero.

$$\overline{E}_R + \overline{E}_Y + \overline{E}_B = E\angle 0 + E\angle -120 + E\angle -240$$
$$= E + E[-0.5 - j0.866] + E[-0.5 + j0.866]$$
$$= 0$$

- This fact can also be verified from the phasor diagram shown in Fig. 2.78. The same result can also be verified from mathematical concept as given below.

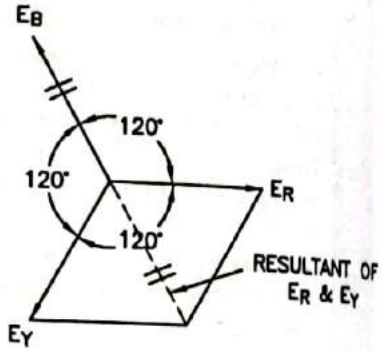


FIG. 2.78 : ADDITION OF THREE PHASE EMFS

$$e_R + e_Y + e_B = E_m \sin \omega t + E_m \sin (\omega t - 120°) + E_m \sin (\omega t - 240°)$$
$$= E_m [\sin \omega t + \sin (\omega t - 120°) + \sin (\omega t - 240°)]$$
$$= 0$$

- This property can also be applied to the currents flowing in the three phases of the circuit.

## 2.29 PHASE SEQUENCE :

**GTU Questions** **GTU, May-2015**

**1. Explain in brief the following for 3-phase AC circuit : Phase sequence** **[May-2015, 3-Marks]**

- In three phase system, there are three voltages having same magnitude and frequency displaced by an electrical angle of 120°.
- They are attaining their positive maximum value in a particular order.
- The order in which voltages (e.m.fs) in the three-phase attain their maximum positive value is known as phase sequence.
- The three-phases may be named out by letters (R, Y, B or a, b, c), by numbers (1, 2, 3) or by colors (Red, Yellow, Blue).
- In India they are named as R Y B.

## 2.30 INTERCONNECTION OF THREE PHASES :

- The following are the two methods, which are universally adopted for interconnection of three phases.

1. Star or Wye (Y) Connection
2. Delta (Δ) or Mesh Connection

Scanned with CamScanner

## 2.31 STAR CONNECTION :

- In this connection all the similar ends (start terminals R, Y and B or finish terminals $R_1$, $Y_1$ and $B_1$) are connected together to form a common junction N called star point or neutral point.

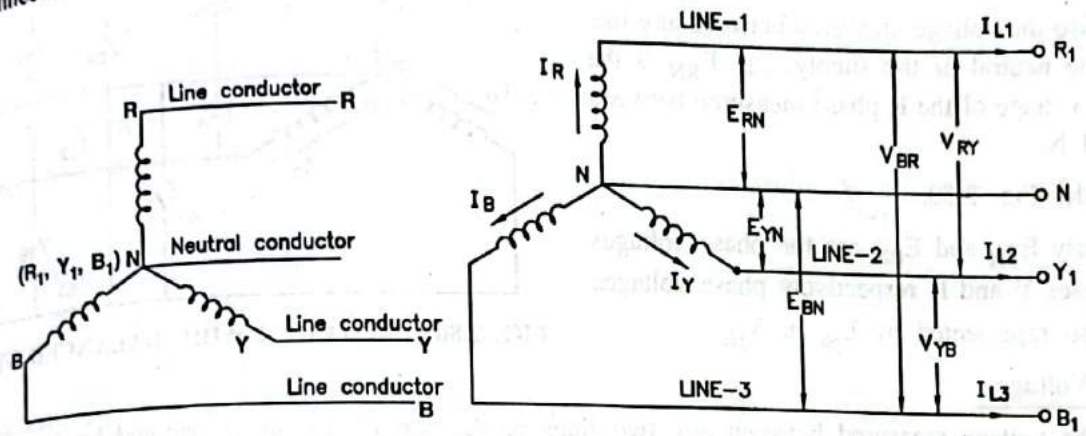


**FIG. 2.79 : THREE PHASE, 4-WIRE SYSTEM**

- A conductor connecting the neutral point N to the load is called neutral conductor.
- The three conductors which connect the three free similar ends of the windings to the load are called line conductors.
- Such an interconnection is called 3-phase, 4 wire star connected system because it resembles the letter inverted Y or it looks like a star.

**Syllabus Topic :** Three phase balanced circuits

## 2.32 BALANCED AND UNBALANCED LOADS :

(1) **Balanced system :** It is one in which voltages in all phases are equal in magnitude and are displaced from one another by equal angles and also the currents in these phases are equal in magnitude and are displaced from one another by equal angles.

(2) **Balanced load :** It is one in which the loads in all the phases are equal in magnitude and phase. A load is said to be balanced if the power factors and phase currents are equal.

(3) **Unbalanced load :** If the three phases of the load have different power factors and phase currents, then the load is said to be an unbalanced load.

- If the three phase voltage is applied across a balanced symmetrical load, then the currents in all the 3 phase will be equal in magnitude and displaced in phase by 120° from each other.

  Thus $\boxed{\bar{I}_N = \bar{I}_R + \bar{I}_Y + \bar{I}_B = 0}$

  i.e. no current flows in the neutral.

- However if the load is unbalanced, there will be a resultant current in the neutral.

## 2.33 IMPORTANT DEFINITIONS :

**GTU, May-2015; December-2015**

**GTU Questions**

1. Explain in brief the following for 3-phase AC circuit :
   (1) Live voltage (2) Phase voltage **[May-2015, 3-Marks]**

Scanned with CamScanner

**1. Phase voltage :**

- The voltage induced in any coil or winding is called the phase voltage.
- It is also the voltage measured between any line and the neutral of the supply. e.g. $E_{RN}$ is the phase voltage of the R phase measured between R and N.
- Consider Fig. 2.80.
- Similarly $E_{YN}$ and $E_{BN}$ are the phase voltages of phases Y and B respectively phase voltages are also represented by $E_{ph}$ or $V_{ph}$.

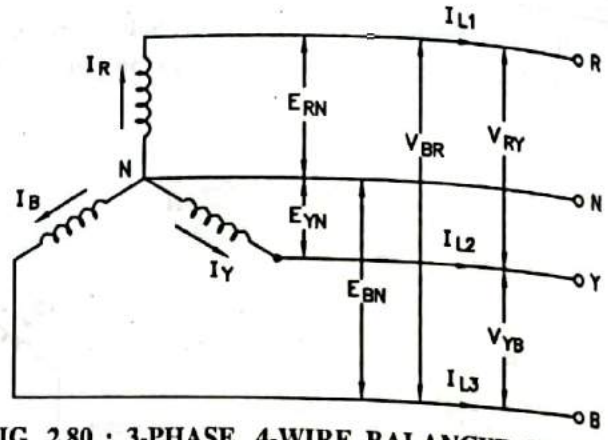


FIG. 2.80 : 3-PHASE, 4-WIRE BALANCED SYSTEM

**(2) Line Voltage :**

- It is the voltage measured between any two lines of the supply system. is denoted by $V_L$. w.r.t. Fig. 2.80,
- The line voltage between the lines R and Y is $V_{RY}$, between the lines Y and B is $V_{YB}$ and between the lines R and B is $V_{RB}$.

**(3) Phase Current :**

- The current flowing in each phase winding is called the phase current. It is denoted by $I_{ph}$. w.r.t. Fig. 2.80,
- The phase currents in the R, Y and B phases are $I_R$, $I_Y$ and $I_B$ respectively.

**(4) Line Current :**

- The current flowing in each line is called the line current. It is denoted by $I_L$. w.r.t. Fig. 2.80.
- Line currents in the R, Y and B phase are $I_{L1}$ and $I_{L2}$ and $I_{L3}$ respectively.

**Syllabus Topic :** Voltage and Current relations in star connection

## 2.34 VOLTAGE AND CURRENT RELATIONSHIPS IN STAR CONNECTION :

**GTU, Jan. 2010; May-2013, 2014, 2015, 2016; Dec. 2012, 2016, 2020**

**GTU Questions**

1. Derive the relation between phase and line values of voltages and currents in case of 3-phase : Star **[January-2010, December-2020, 5-Marks]**
2. Derive the voltage and current relationship in star connected load. **[December-2012, 7-Marks]**
3. Establish relation between line voltage and phase voltage and current relation in 3-phase star connection. Draw phasor diagram. **[May-2013, 2016, 7-Marks]**
4. State relation between line value and phase value of voltage and current for : (1) Balanced star connected load, (2) Balanced delta connected load. **[May-2014, 2015, 7-Marks]**
5. For a three-phase balanced star-connected system develop the relationship between the following the help of phasor diagram : (1) Line voltage and phase voltage (2) Line current and phase current **[December-2016, 4-Marks]**

Scanned with CamScanner

Fig. 2.80 shows a 3-phase, 4-wire balanced system.

- Here as discussed earlier,
  - $E_{RN}$, $E_{YN}$ and $E_{BN}$ are the phase voltages.
  - $V_{RY}$, $V_{YB}$ and $V_{BR}$ are the line voltages.
  - $I_{L1}$, $I_{L2}$, $I_{L3}$ are the line currents.
  - $I_R$, $I_Y$, $I_B$ are the phase currents.
- Since the system is balanced,

$$I_R = I_Y = I_B = I_{Ph}$$
$$I_{L1} = I_{L2} = I_{L3} = I_L$$
$$E_{RN} = E_{YN} = E_{BN} = E_{Ph}$$
$$V_{RY} = V_{YB} = V_{BR} = V_L$$

**Relation between line current and phase current :**

From Fig. 2.80, it is clear that

$$I_R = I_{L1} \rightarrow I_{Ph} = I_L$$
$$I_Y = I_{L2} \rightarrow I_{Ph} = I_L$$
$$I_B = I_{L3} \rightarrow I_{Ph} = I_L$$

Thus in star connection,

$$\boxed{\text{Line current, } I_L = \text{Phase current, } I_{Ph}}$$

**Relation between line voltage and phase voltage :**

- It is seen from Fig. 2.80 that in star connection, there are two phase windings between each pair of line terminals.
- Since similar ends of these two winding are connected together, the emfs across them oppose each other and their instantaneous values will have opposite polarities. Therefore the rms value of line voltage between any two lines will be obtained by the vector difference of the two phase voltages.

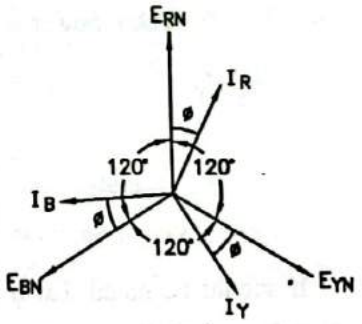


**FIG. 2.81 : PHASOR DIAGRAM OF STAR CONECTED SYSTEM**

- The phasor diagram of the phase emfs and currents in a star connected system is shown in Fig. 2.81.
- From Fig. 2.80 the line voltages can be obtained from the phase voltages as shown below.
- Line voltage between terminals R and Y,

$$V_{RY} = E_{RN} + E_{NY}$$
$$= E_{RN} + (-E_{YN})$$
$$= \boxed{E_{RN} - E_{YN}}$$
$$= \text{phasor difference}$$

Similarly

$$\boxed{E_{YB} = E_{YN} - E_{BN}}$$

and $$\boxed{E_{BR} = E_{BN} - E_{RN}}$$

- Hence it is clear that in a star connected system, the line voltage is obtained as the vector difference of the two corresponding phase voltages.



Scanned with CamScanner

- This is shown in Fig. 2.82. For example, $V_{RY}$ is found by adding $E_{RN}$ and $E_{YN}$ reversed and its magnitude is given by the diagonal of the parallelogram.
- The resultant or line voltage is given by

$$V_{RY} = E_{RN} - E_{YN}$$
$$= 2\ E_{Ph} \cos \frac{60°}{2}$$
$$= 2\ E_{Ph} \cos 30°$$
$$= 2\ E_{Ph} \times \frac{\sqrt{3}}{2}$$
$$= \sqrt{3}\ E_{Ph}$$

Similarly $V_{YB} = V_{BR} = \sqrt{3}\ E_{Ph} = V_L$

Thus in balanced star connected system,

$$\boxed{V_L = \sqrt{3}\ E_{Ph}}$$

i.e. Line voltage = $\sqrt{3}$ × phase voltage

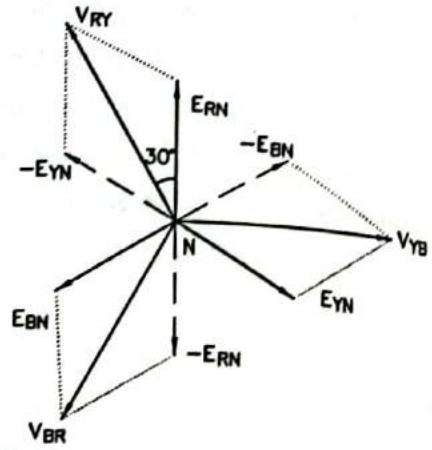


FIG. 2.82 : PHASOR DIAGRAM FOR LINE VOLTAGE AND PHASE VOLTAGES IN STAR CONNECTION

### 2.34.1 Power :

- The total power dissipated in the 3-phase star connected system is the arithmetic sum of the powers dissipated in the three phases.

$$\therefore \quad \text{Total power} = 3 \times \text{power per phase}$$
$$= 3 \times V_{ph} \times I_{ph} \times \cos\phi$$
$$= 3 \times \frac{V_L}{\sqrt{3}} \times I_L \times \cos\phi$$
$$= \boxed{\sqrt{3}\ V_L\ I_L \cos\phi}$$

- It should be noted that $\phi$ is the angle between phase voltage and phase current and not between the line voltage and line current.

**Syllabus Topic :** Voltage and Current relations in Delta Connection

## 2.35 DELTA CONNECTION :

**GTU, Jan. 2010; May-2012, 2013, 2014, 2016; Dec. 2012, 2016**

**GTU Questions**

1. Derive the relation between phase and line values of voltages and currents in case of 3-phase : Delta connection **[January-2010, 5-Marks]**
2. Derive the voltage and current relationship in delta connected load. **[December-2012, 7-Marks]**
3. Establish relation between line voltage and phase voltage and current relation in 3-phase delta connection. Draw phasor diagram. **[May-2013, 2016, 7-Marks]**
4. State relation between line value and phase value of voltage and current for : (1) Balanced star connected load, (2) Balanced delta connected load. **[May-2014, 7-Marks]**
5. For a three-phase balanced delta-connected system develop the relationship between the following the help of phasor diagram : (1) Line voltage and phase voltage (2) Line current and phase current **[December-2016, 4-Marks]**

Scanned with CamScanner

- In this connection the dissimilar ends of three phase windings are connected together i.e. the finish of one winding is connected to the start of next windings and so on to obtain delta or mesh connection as shown in Fig. 2.83.
- The circuit diagram resembles the Greek letter delta Δ, so this connection is called delta connection. The line conductors are joined at the junctions of the windings of 3 phase system.

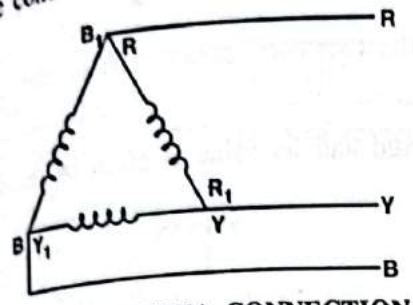


FIG. 2.83 : DELTA CONNECTION

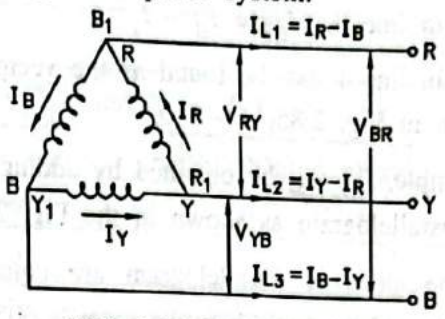


FIG. 2.84 CURRENT AND VOLTAGES IN 3 PHASE SYSTEM

- Again the voltage induced in each winding is called phase voltage and the current in each windings is called phase current.
- However the potential difference between two line conductors is called line voltage and the current flowing through be line conductor is called line current.

## 2.5.1 Voltage and Current Relation in Delta Connected System :

- In delta connection, the three coil windings are connected together such that the finishing end of one coil is connected to the starting end of the other coil and so on as shown in Fig. 2.84.
- In other words, the three windings are connected in series to form a closed path or mesh. Three leads are taken out from the three junctions to form the three lines.
- In this method, there is no neutral wire and so it is called as 3-phase, 3-wire system.
- Fig. 2.84 shows 3-phase, 3-wire delta connected system. The emf across each winding is called the phase voltage denoted by $E_R$, $E_Y$ and $E_B$ and voltage between any two lines is called the line voltage denoted by $V_{RY}$, $V_{YB}$ and $V_{BR}$ respectively.
- Similarly, currents flowing in each winding are known as phase currents denoted by $I_R$, $I_Y$ and $I_B$ and currents flowing in the lines are called line currents denoted by $I_{L1}$, $I_{L2}$ and $I_{L3}$ .
- Since the system is balanced,

$$I_R = I_Y = I_B = I_{Ph}$$
$$I_{L1} = I_{L2} = I_{L3} = I_L$$
$$E_R = E_Y = E_B = E_{Ph}$$
$$V_{RY} = V_{YB} = V_{BR} = V_L$$

**Relation between line voltage and phase voltage :**

- It is clear that

$$E_R = V_{RY} \rightarrow E_{Ph} = V_L$$
$$E_Y = V_{YB} \rightarrow E_{Ph} = V_L$$
$$E_B = V_{BR} \rightarrow E_{Ph} = V_L$$

- Thus in delta connection,

**Line voltage, $V_L$ = Phase voltage, $E_{Ph}$**

Scanned with CamScanner

**Relation between line current and phase current :**

- It is seen from the Fig. 2.84 that current flowing in each line is the vector difference of the two phase currents.

  Current in line 1, $I_{L1} = I_R - I_B$

  Current in line 2, $I_{L2} = I_Y - I_R$

  Current in line 3, $I_{L3} = I_B - I_Y$

- Current in line 1 can be found as the vector difference of the two corresponding phase currents. This is shown in Fig. 2.85.

- For example, $I_{L1}$ can be obtained by adding $I_R$ and $I_B$ reversed and its value is given by the diagonal of the parallelogram as shown in the Fig. 2.85.

- Since the sides of parallelogram are equal in magnitude and the angle between them is 60°, the resultant current or the line current is given as

$$I_{L1} = I_R - I_B \text{ (vector difference)}$$

$$= 2 \times I_{Ph} \times \cos\frac{60°}{2}$$

$$= 2 \times I_{Ph} \times \cos 30°$$

$$= 2 \times I_{Ph} \times \frac{\sqrt{3}}{2}$$

$$= \sqrt{3}\, I_{Ph}$$

- Similarly $I_{L2} = I_{L3} = \sqrt{3}\, I_{Ph} = I_L$

- Thus, in delta connection,

$$\boxed{\text{Line current, } I_L = \sqrt{3} \times \text{Phase current}}$$

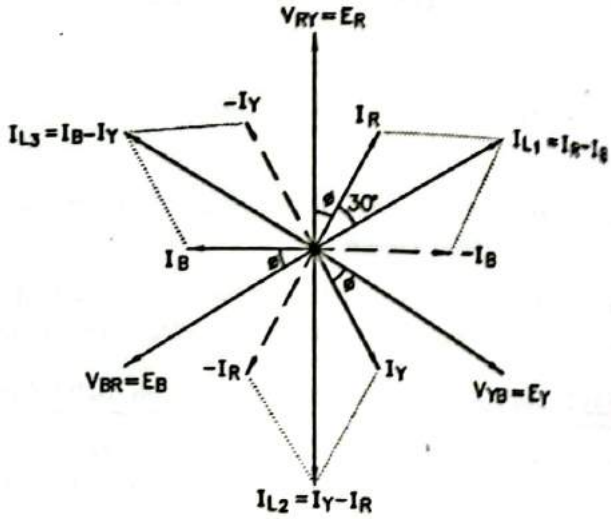


FIG. 2.85 : PHASOR DIAGRAM FOR DELTA CONNECTED SYSTEM

**2.35.2 Power :**

- The total power in the 3-phase circuit is equal to the arithmetic sum of three phase powers. Hence,

  Total power = 3 × power per phase

$$= \boxed{3 \times V_{ph}\, I_{ph} \cos\phi}$$

- But in the delta connection

$$V_{ph} = V_L \text{ and } I_{ph} = \frac{I_L}{\sqrt{3}}$$

$$\therefore \quad \text{Total power} = 3 \times V_L \frac{I_L}{\sqrt{3}} \cos\phi$$

$$= \boxed{\sqrt{3}\, V_L\, I_L \cos\phi}$$

Scanned with CamScanner

## 2.36 COMPARISON OF STAR AND DELTA CONNECTED SYSTEM :

| Sr. No. | Star Connection | Delta Connection |
|---|---|---|
| 1. | Apparent power = $\sqrt{3}\ V_L\ I_L$ | Same |
| 2. | Active Power = $\sqrt{3}\ V_L\ I_2 \cos\phi$ | Same |
| 3. | Line voltage $V_L = \sqrt{3}\ V_{ph}$ and $I_L = I_{ph}$ | $V_L = V_{ph}$ and $I_L = \sqrt{3} V_{ph}$ |
| 4. | Line voltages are 30° ahead of respective phase voltages. | Line currents are 30° behind of respective phase currents. |
| 5. | Line voltages are 120° apart. | Same |
| 6. | Angle between line current and corresponding line voltage (30° + $\phi$) | Angle between line current and corresponding line voltage (30° + $\phi$) |
| 7. | System can be arranged to suit both lighting and power circuits simultaneously. | System can be arranged to suit both lighting and power. |
| 8. | Star connected transformer works less satisfactorily. | Delta connected transformers works more satisfactorily. |
| 9. | Used mostly for high voltage 3-phase alternators. | Used mostly for small, voltage 3-phase motors. |

**Syllabus Topic :** Power measurement in balanced three phase circuits

## 2.37 MEASUREMENT OF POWER IN 3-PHASE SYSTEM :

- Wattmeter is used to measured power in the electric circuit.
- To measure power in single phase AC circuit, the connections of wattmeter are made as shown in Fig. 2.86.
- Current coil (C.C) of Wattmeter is connected in series with the load. The pressure coil (P.C.) is connected across the load. Wattmeter reading gives the power consumed by the load.

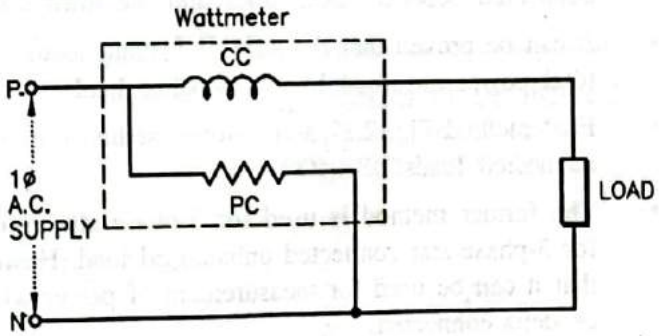


FIG. 2.86 : CONNECTIONS OF WATTMETER

### 2.37.1 One Wattmeter Method :

- Power can be measured by connecting a single wattmeter in the circuit.
- Its current coil is connected in one line and the pressure coil between line and the neutral point as shown in Fig. 2.87.
- The reading of the wattmeter gives the power per phase.

Total power = 3 × power per phase

= $\boxed{3 \times \text{wattmeter reading}}$

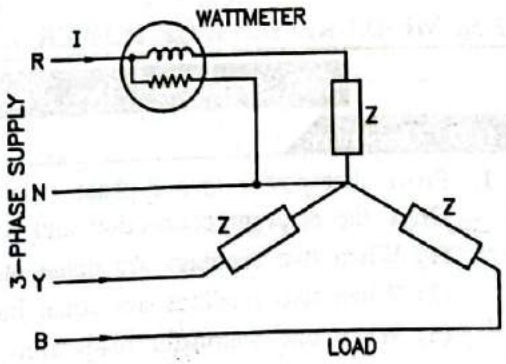


FIG. 2.87 : MEASUREMENT OF POWER USING ONE WATTMETER

Scanned with CamScanner

### 2.37.2 Three Wattmeter Method :

- In this method three watt meters are connected to measure the power of each phase separately as shown in Fig. 2.88(a) and Fig. 2.88(b).

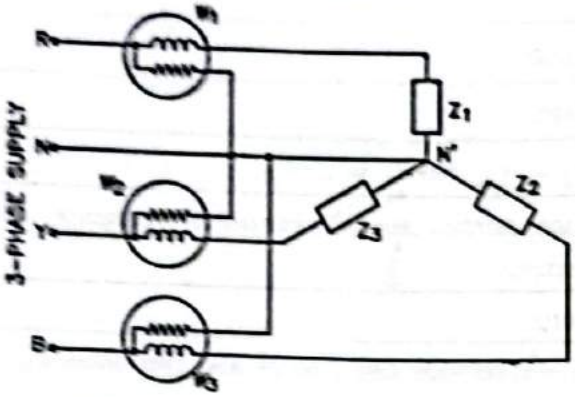


FIG. 2.88(a) : MEASUREMENT OF POWER BY THREE WATMETER METHOD (STAR CONNECTIONED LOAD)

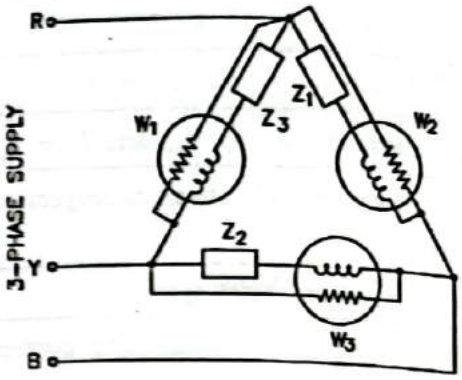


FIG. 2.88(b) : MEASUREMENT OF POWER BY THREE WATMETER METHOD (DELTA CONNECTIONED LOAD)

- The algebraic sum of three watt meter readings gives the total power.
- The difficulty with this method is that sometimes it is not possible to have access to the neutral point in the star connection. Also it is not easy to make connections into the phases of a delta connection.

### 2.37.3 Two Wattmeter Method :

- This is the most common method for the measurement of power in 3-phase system.
- In this method two wattmeters are connected.
- The current coils of two wattmeters are connected in series in any two lines and the potential coils are connected between these lines and the third line in which the current coil is not connected.
- It can be proved that the sum of instantaneous values of power indicated by these wattmeters equals the total power absorbed by the 3-pahse load.
- First method Fig. 2.87 and second method Fig. 2.88(a) of power measurement can only be used for star-connected loads.
- The former method is used for 3-phase star connected balanced load whereas the latter method is used for 3-phase star-connected unbalanced load. However the third method i.e. two wattmeter method is such that it can be used for measurement of power whether the load is balanced or unbalanced, star-connected or delta-connected.
- Hence two wattmeter method is invariably used for measurement of power in 3-phase supply system in practice.

## 2.38 MEASUREMENT OF POWER AND POWER FACTOR BY TWO WATTMETER METHOD :

**GTU, Jan. 2010; Dec. 2008, 2012, 2015; May-2012, 2013, 2015, 2017, 2018, 2019; Jan. 2020**

**GTU Questions**

1. Prove that power in a 3-phase balanced circuit can be deduced from the readings of two wattmeters. Draw the relevant connection and phasor diagrams. Discuss the nature of power factor.
   (1) When two readings are equal and positive
   (2) When two readings are equal but opposite in sign
   (3) When one wattmeter reads zero.
   **[December-2008, 4-Marks]**
2. Prove that the sum of readings of two wattmeters connected to measure power in 3-phase a.c. circuit, gives total power consumed by the circuit.
   [January-2010, 5-Marks]

Scanned with CamScanner

3. A balanced three phase supply is given to a star connected load. Give proof of two wattmeter method for this system. State demerits of this method. **[May-2011, 6-Marks]**
4. How can we measure the power with the help of two wattmeter method in three phase system with star connected load ? **[December-2012, 7-Marks]**
5. Explain two wattmeter method for 3-phase power measurement. **[May-2013, 7-Marks]**
6. Prove the equation for measurement of electrical power in 3-phase circuit by two wattmeter method. Also draw phasor diagram. **[May-2015, 7-Marks]**
7. Prove the equation for measurement of electrical power in 3-phase circuit by two wattmeter method for balanced load with phasor diagram. **[December-2015, 7-Marks]**
8. Explain the two wattmeter method for measurement of 3-phase power. **[May-2017, 7-Marks]**
9. With neat circuit diagram and a phasor diagram, prove that two wattmeters are sufficient to measure total power in 3-phase system. **[May-2018, 7-Marks]**
10. Prove that the sum of readings of two watt meters connected to measure power in three phase circuit gives total power consumed by the circuit. **[May-2019, January-2020, 4-Marks]**

- This is the most common method for the measurement of power in 3-phase system.
- In this method two wattmeters are connected as shown in Fig. 2.89.
- The current coils (C.C) of two wattmeters are connected in series in any two lines and the potential coils (P.C.) are connected between these two lines.
- Fig. 2.89 shows 3-phase star-connected balanced load with two wattmeters connected in the circuit to measure total power input to the load.
- Let, $I_R$, $I_Y$ and $I_B$ be the rms values of currents flowing in the lines and $V_{RN}$, $V_{YN}$ and $V_{BN}$ be the rms values of phase voltages of the load.

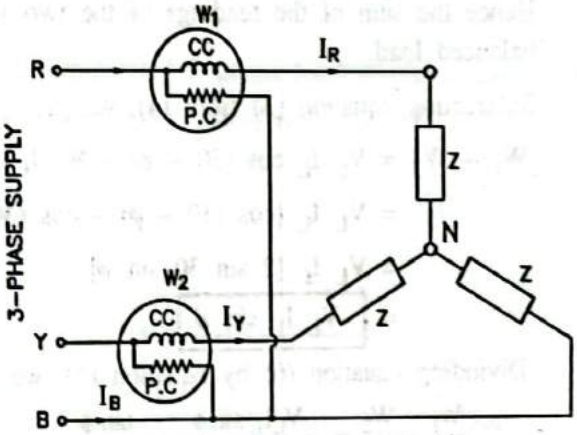


**FIG. 2.89 : MEASUREMENT OF POWER BY TWO WATTMETER METHOD (STAR CONNECTED LOAD)**

- The phasor diagram for inductive load is shown in Fig. 2.90.
- Current through current coil of wattmeter $W_1 = I_R$
- Potential difference across pressure coil of wattmeter

$$W_1 = V_{RB} = V_{RN} - V_{BN}$$

- Phase difference between $I_R$ and $V_{RB} = (30° - \phi)$
- Therefore, the reading of wattmeter

$$W_1 = I_R\ V_{RB} \cos (30 - \phi) \quad \text{... (1)}$$

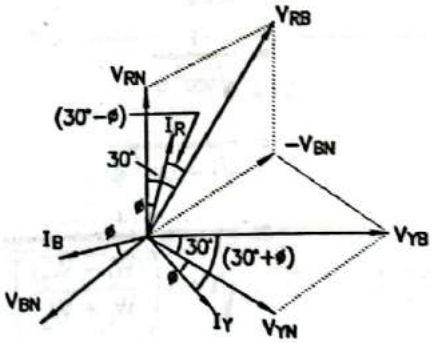


**FIG. 2.90 : PHASHOR DIAGRAM FOR MEASUREMENT OF POWER LAGGING P.F.**

- Current through current coil of wattmeter $W_2 = I_Y$
- Potential difference across pressure coil of wattmeter $W_2 = V_{YB} = V_{YN} - V_{BN}$
- Phase difference between $I_Y$ and $V_{YB} = (30 + \phi)$
- Therefore the reading of wattmeter $W_2 = I_Y\ V_{YB} \cos (30 + \phi)$ ... (2)

Scanned with CamScanner

- Since the load assumed is balanced

$$I_R = I_Y = I_B = I_L \quad \text{and} \quad V_{RY} = V_{YB} = V_{BR} = V_L$$

- Substituting these in equations (1) and (2)

$$W_1 = V_L\, I_L \cos(30 - \phi)$$
$$W_2 = V_L\, I_L \cos(30 + \phi) \qquad \text{... (3)}$$

- Adding these, we get ... (4)

$$W_1 + W_2 = V_L\, I_L \cos(30 - \phi) + V_L\, I_L \cos(30 + \phi)$$
$$= V_L\, I_L\, [\cos(30 - \phi) + \cos(30 + \phi)]$$
$$= V_L\, I_L\, [\cos 30 \cos\phi + \sin 30 \sin\phi + \cos 30 \cos\phi - \sin 30 \sin\phi]$$
$$= V_L\, I_L\, [2 \cos 30 \cos\phi]$$
$$= V_L I_L \left[2 \times \frac{\sqrt{3}}{2} \times \cos\phi\right]$$
$$= \boxed{\sqrt{3}\, V_L\, I_L \cos\phi}$$

= total power in a balanced 3-phase circuit. ... (5)

- Hence the sum of the readings of the two wattmeters is equal to the total power drawn by a 3-phase balanced load.

- Subtracting equation (3) from (4), we get

$$W_1 - W_2 = V_L\, I_L \cos(30 - \phi) - V_L\, I_L \cos(30 + \phi)$$
$$= V_L\, I_L\, [\cos(30 - \phi) - \cos(30 + \phi)]$$
$$= V_L\, I_L\, [2 \sin 30 \sin\phi]$$
$$= \boxed{V_L\, I_L \sin\phi} \qquad \text{... (6)}$$

Divinding equation (6) by equation (5), we get

$$\frac{W_1 - W_2}{W_1 + W_2} = \frac{V_L I_L \sin\phi}{\sqrt{3} V_L I_L \cos\phi} = \frac{\tan\phi}{\sqrt{3}}$$

$$\therefore \quad \tan\phi = \frac{\sqrt{3}\,(W_1 - W_2)}{W_1 + W_2}$$

$$\cos\phi = \frac{1}{\sec\phi}$$
$$= \frac{1}{\sqrt{\sec^2\phi}}$$
$$= \frac{1}{\sqrt{1 + \tan^2\phi}}$$
$$= \frac{1}{\sqrt{1 + 3\left(\frac{(W_1 - W_2)}{W_1 + W_2}\right)^2}}$$
$$= \frac{1}{\sqrt{1 + 3\left(\frac{(1 - \frac{W_1}{W_2})}{1 + \frac{W_2}{W_1}}\right)^2}} \qquad \text{... (7)}$$

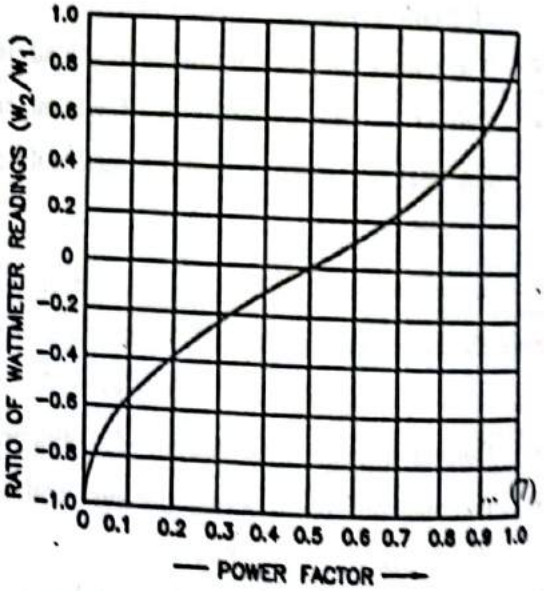


**FIG. 2.91 : RELATION BETWEEN $W_2/W_1$ AND POWER FACTOR**

Scanned with CamScanner

- Put, $r = \frac{W_2}{W_1} = \frac{\text{small reading}}{\text{large reading}}$ ratio of two wattmeter readings
- It is clear that this ratio $r$ is always less than unity
- Hence,

$$\text{power factor, } \cos\phi = \frac{1}{\sqrt{1+3\left(\frac{1-r}{1+r}\right)^2}}$$

$$= \frac{1+r}{\sqrt{(1+r)^2+3(1-r)^2}}$$

$$= \boxed{\frac{1+r}{2\sqrt{1-r+r^2}}}$$

**Example-2.35 :**

**A 415 V, 3-phase voltage is applied to a balanced star-connected 3-phase load of phase impedance (3 + j 4) ohms each. Calculate (i) Line current and (ii) total power supplied in kW.**

*Solution :*

The star connection load is shown in Fig. 2.92

$V_L = 415$ V, $Z_{ph} = 3 + j\,4\,\Omega$

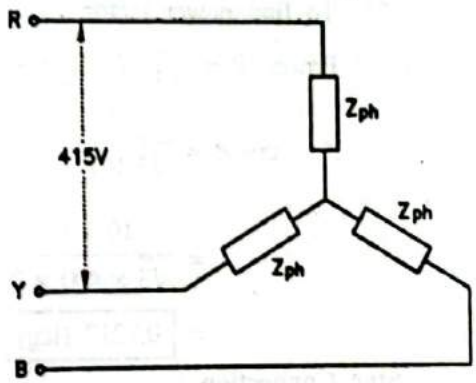


FIG. 2.92

Voltage per phase, $V_{Ph} = \frac{V_L}{\sqrt{3}}$

$= \frac{415}{\sqrt{3}}$

$= 239.6$ Volt

Impedance per phase $Z_{ph} = 3 + j\,4$

$= \sqrt{3^2+4^2}$

$= 5\ \Omega$

Current per phase, $I_{Ph} = \frac{V_{Ph}}{Z_{Ph}}$

$= \frac{239.6}{5}$

$= 47.92$ A

$\therefore$ Line current $I_L = I_{ph} = \boxed{47.92 \text{ A}}$

Power factor, $\cos\phi = \frac{R_{Ph}}{Z_{Ph}} = \frac{3}{5} = 0.6$ (lagging)

Total power supplied, $P = \sqrt{3}\ V_L\ I_L \cos\phi$

$= \sqrt{3} \times 415 \times 47.92 \times 0.6$

$= \boxed{20.666 \text{ kW}}$



Scanned with CamScanner

**Example-2.36 :**

**A Δ-connected balanced 3-phase load is supplied from 400 V, 3-phase mains. The line current is 20 A & the power taken by load is 10 MW. Find**

**(1) Impedance is each branch**

**(2) Power factor of the load**

**(3) Line current & power consumed, if same load is connected in star.** **GTU, June-2015**

***Solution :***

For the delta connected load as shown in Fig. 2.93.

$V_L = V_{ph} = 400$ V

$I_L = 20$ A

$\therefore \quad I_L = \sqrt{3}\, I_{ph}$

$\therefore \quad I_{ph} = \dfrac{I_L}{\sqrt{3}} = \dfrac{20}{\sqrt{3}} = 11.55$ A

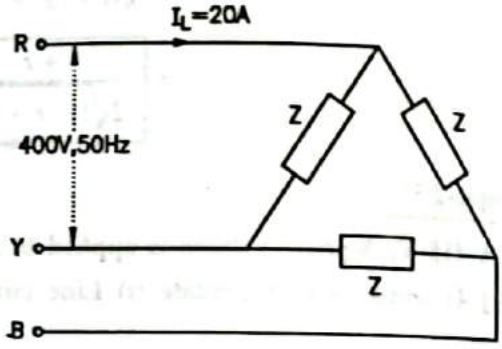


FIG. 2.93

**(1) To Find impedane of each branch**

$$Z_{ph} = \frac{V_{ph}}{I_{ph}}$$

$$= \frac{400}{11.55}$$

$$= \boxed{34.63\ \Omega}$$

**(2) To find power factor.**

Power, $P = \sqrt{3}\, V_L\, I_L \cos\phi$

$$\therefore \quad \cos\phi = \frac{P}{\sqrt{3}\, V_L I_L}$$

$$= \frac{10 \times 10^3}{\sqrt{3} \times 400 \times 20}$$

$$= \boxed{0.7217 \text{ (lag)}}$$

**Star Connection :**

**(3) To find line current and power consumed if load is star connected.**

Here,

$V_L = 400$ V Since $V_L = \sqrt{3}\, V_{ph}$

for star connection

$$\therefore \quad V_{ph} = \frac{V_L}{\sqrt{3}} = \frac{400}{\sqrt{3}} = 230.94 \text{ V}$$

$$I_{ph} = \frac{V_{ph}}{Z_{ph}} = \frac{230.94}{34.63} = \boxed{6.66 \text{ A}}$$

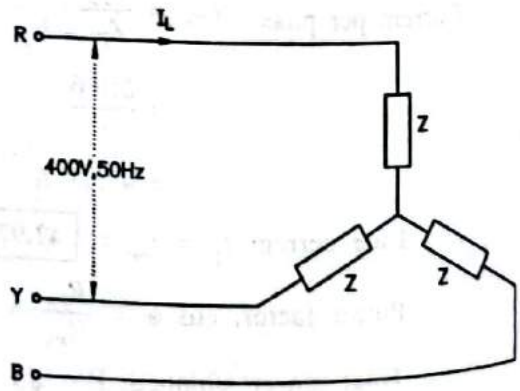


FIG. 2.94

Since load is star connected

$$I_L = I_{ph} = \boxed{6.66 \text{ A}}$$

Power factor $\cos\phi = 0.7217$ [$\because$ $Z_{ph}$ is same]

Scanned with CamScanner

Power consumed, $P = \sqrt{3}\ V_L\ I_L \cos\phi$

$= \sqrt{3} \times 400 \times 6.66 \times 0.7217$

$= \boxed{3330 \text{ Watt}}$

**Example-2.37 :**

**Three similar coils each of resistance 28 Ω and inductance of 0.7 H are connected in (a) star and (b) delta. If the supply voltage is 230 V, 50 Hz, calculate the line current and the total power consumed.**

**GTU, January-2009, May-2014**

**Solution :**

Given Data :

$V_L = 230$ V $\quad R_{ph} = 28\ \Omega$

$L = 0.7$ H

$X_{Lph} = 2\pi f L$

$= 314 \times 0.7$

$= 219.911\ \Omega$

$Z_{ph} = R_{ph} + X_{Lph}$

$= 28 + j\ 219.911$

$= 221.686 \angle 82.74°\ \Omega$

**(a) Star Connection :**

$$V_{ph} = \frac{230}{\sqrt{3}}$$

$= 132.79$ V

$$I_{ph} = \frac{V_{ph}}{Z_{ph}}$$

$$= \frac{132.79 \angle 0}{221.686 \angle 82.74°}$$

$= 0.6 \angle -82.74°$ A

$I_L = I_{ph} = \boxed{0.6 \text{ A}}$

Power, $P = \sqrt{3}\ V_L\ I_L \cos\phi$

$= \sqrt{3} \times 230 \times 0.6 \times \cos(-82.74°)$

$= \boxed{30.2058 \text{ W}}$

**(b) Delta Connection :**

$V_{ph} = V_L = 230$ V

$$I_{ph} = \frac{V_{ph}}{Z_{ph}} = \frac{230 \angle 0°}{221.686 \angle 82.74°}$$

$= 1.0375 \angle -82.74°$

$I_L = \sqrt{3}\ I_{ph}$

$= \sqrt{3} \times 1.0375$

$= \boxed{1.797 \text{ A}}$

Scanned with CamScanner

$$\text{Power } P = \sqrt{3}\ V_L I_L \cos\phi$$
$$= \sqrt{3} \times 230 \times 1.797 \times \cos(82.74°)$$
$$= \boxed{90.466\ W}$$

**Example-2.38 :**

**A balanced star connected load of (4 + j 3) Ω per phase is connected to a balanced 3-phase 400 V supply. Find the line current, power factor, active power and reactive power.** **GTU, Dec. 2010; May-2019**

***Solution :***

$$Z_{ph} = 4 + j\,3 = 5\ \angle 36.86°$$
$$V_L = 400\ V$$
$$V_{ph} = \frac{400}{\sqrt{3}} = 230.94\ V$$

$$\text{Current per phase, } I_{ph} = \frac{V_{ph}}{Z_{ph}}$$
$$= \frac{230.94}{5}$$
$$= \boxed{46.19\ A}$$

**For star connection**

(i) $I_L = I_{ph} = \boxed{46.19\ A}$

(ii) $$\text{Power factor, } \cos\phi = \frac{R}{Z}$$
$$= \frac{4}{5}$$
$$= \boxed{0.8\ \text{lag}}$$

(iii) $$\text{Active power } P = \sqrt{3}\ V_L I_L \cos\phi$$
$$= \sqrt{3} \times 400 \times 46.19 \times 0.8\ W$$
$$= 25601.09\ \text{watt}$$
$$= \boxed{25.601\ kW}$$

(iv) $$\text{Reactive power} = \sqrt{3}\ V_L I_L \sin\phi$$
$$= \sqrt{3} \times 400 \times 46.19 \times \sin(36.86)$$
$$= 19196.39\ VAR$$
$$= \boxed{19.196\ KVAR}$$

**Example-2.39 :**

**A delta connected load having branch impedances of (15 + j20) Ω is connected to a 220 V, 3 phase AC supply. Find**

1. **Line currents.**
2. **Per phase power consumed.**
3. **What is the phasor sum of the line currents ? Why does it have this value ?**

**GTU, May-2010**

Scanned with CamScanner

Solution :

$V_{ph} = V_L = 220$ V

$Z_{ph} = 15 + j20 = 25 \angle 53.8°$

$\therefore \quad I_{ph} = \dfrac{V_{ph}}{Z_{ph}} = \dfrac{220}{25 \angle 53.8°}$

$= 8.8 \angle 53.8°$

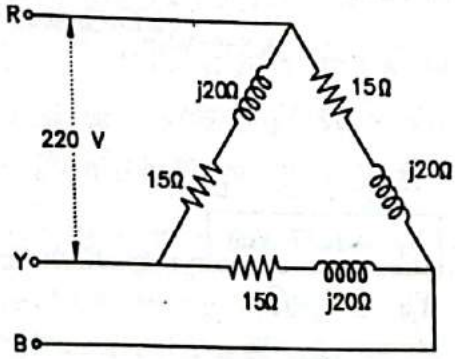


FIG. 2.95

(1) **To find line current.**

Now $I_L = \sqrt{3} \times I_{ph}$

$= \sqrt{3} \times 8.8$

$= 15.24$ A

(2) **To find per phase power consumed.**

Power/phase $= (I_{ph})^2 R_{ph}$

$= (8.8)^2 \times 15$

$= \boxed{462 \text{ Watts}}$

(3) **Phase sum would be zero.**

($\because$ Each pase has equival magnitude & mutual phase diff. of 120°)

**Example-2.40 :**

**Two wattmeter's connected to measure three phase power for star connected loads read 10.37 kW and 5.185 kW. The line current is 10 Amp. Calculate (i) Line and phase voltage. (ii) Resistance and reactance per phase.**

**GTU, December-2011**

Solution :

Given data

Types of connection : Star

$W_1 = 10.37$ kW

$W_2 = 5.185$ kW

$I_L = 10$ Amp

$$\tan \phi = \frac{\sqrt{3}(W_1 - W_2)}{W_1 + W_2}$$

$$= \sqrt{3} \times \frac{10.37 - 5.185}{10.37 + 5.185}$$

$$= \sqrt{3} \times \frac{5.185}{15.555}$$

$= 0.57735$

$\phi = \tan^{-1}(0.57735)$

$= 30°$

Scanned with CamScanner

Power factor = $\cos\phi = \cos 30 = 0.866$

Total Power $= W_1 + W_2$

$= 15.555$ Watt

$$W = \sqrt{3}\ V_L\ I_L \cos\phi$$

$$15.555 = \sqrt{3}\ V_L \times 10 \times 0.866$$

$$\therefore \boxed{V_L = 1037 \text{ Volt}}$$

$$V_{ph} = V_L/\sqrt{3}$$

$$= 1037/\sqrt{3}$$

$$= \boxed{598.71 \text{ Volt}}$$

$$Z_{ph} = \frac{V_{ph}}{I_{ph}}$$

$$= \frac{598.71}{10}$$

$$= \boxed{59.87\ \Omega}$$

$$R_{ph} = Z_{ph} \times \cos\phi$$

$$= 59.87 \times 0.866$$

$$= \boxed{51.85\ \Omega}$$

$$X_{ph} = Z_{ph} \times \sin\phi$$

$$= 59.87 \times 0.5$$

$$= \boxed{29.93\ \Omega}$$

## Exercise

1. Derive the relationship between line voltage and phase voltage in a 3-phase star-connected circuit. **(Refer Section-2.34)**
2. Derive the relationship between line current and phase current in a 3-phase delta-connected circuit. **(Refer Section-2.35)**
3. Derive an expression for the total power for a balanced 3-phase star or delta connected load in terms of line voltage, line current and power factor. **(Re: Section-2.34 & 2.35)**
4. Show that the power input to a 3-phase circuit can be measured by two wattmeters connected properly in the circuit. **(Refer Section-2.38)**
5. The inductive coils each with a resistance of 15 Ω and an inductance of 0.03 H are connected (i) in star and (ii) in delta, to a 3-phase, 400 V, 50 Hz supply. Calculate for each of the above cases (i) phase current and line current (ii) total power absorbed.

   **[13 A, 13 A, 7.632 kW, 22.6 A, 39.14 A, 22.968 kW]**
6. A 3-phase, 200 kW, 50 Hz, delta connected induction motor is supplied from a 3-phase, 440 V, 50 Hz supply system. The efficiency and the power factor of the motor are 91 percent an 0.86 re:pectively. Calculate (i) current in each motor phase and (ii) line current. **[193.6 A, 335.3 A]**

Scanned with CamScanner

7. Three non-inductive loads of 8 kW in R-phase 6 kW in Y-phase and 4 kW in B-phase are connected between the three line conductors and neutral of a 3-phase, 4-wire system with line voltage of 400 V. Determine (i) the current in each line (ii) current in the neutral wire. **[34.6 A, 26 A, 17.3 A, 14.97 A]**

8. Three non-inductive resistances each of 100 Ω are connected in star to a 3-phase, 440 V, supply. Three equal choke coils each of reactance 100 Ω are also connected in delta to the same supply. Calculate (i) line current and (ii) power factor of the system. **[8.04 A, 0.3156]**

9. A 3-phase, 3-wire, 400 V, 50 Hz system supplies a load of 50 kW at a power factor of 0.75 lagging between the red phase and neutral, 60 kW at a power actor of 0.85 leading between the yellow phase and neutral and 10 kW at unity power factor between the blue phase and neutral. Determine the current in the neutral conductor. **[246 A]**

10. A balanced star-connected load is supplied from a symmetrical 3-phase, 400 V system. The current in each phase is 30 A and lags 30° behind the phase voltage. Calculate (i) phase voltage and (ii) total power. Also draw the phasor diagram showing the current and voltages. **[231 V, 18 kW]**

11. The readings of the two wattmeters connected to a balanced 3-phase load are 128 W and 56 W. When a resistor of about 25 Ω is added to each phase, the reading of the second wattmeter is reduced to zero. State giving the reason, the power in the circuit before the resistors were added. **[72 W]**

12. A balanced star-connected load each phase having a resistance of 10 Ω and inductive reactance of 30 Ω is connected to 400 V, 50 Hz supply. The phase sequence is RYB. Wattmeters connected to read total power have their current coil in the red phase and blue phase respectively. Calculate the reading on each wattmeter and draw a phasor diagram. **[2190 W, – 583 W]**

## GTU QUESTIONS AND ANSWERS

**Note to the Students :**

- **Below Questions are from previous GTU Examination Papers**

### January-2019

1. Define Amplitude, Frequency and Time period for alternating quantities. **3-Marks**

**Ans. : Refer Section-2.4**

2. The maximum values of voltage and current in a circuit are 400 V and 20 A respectively. Both the quantities are sinusoidal with 50 Hz frequency. The instantaneous values of voltage and current at time t = 0 second are 283 V and 10 A respectively (both increasing and positive). Obtain the equations of voltage and current in this circuit at time 't' second. Also find out the active power consumption in the circuit. **7-Marks**

**Ans. : Refer Example-2.8.1**

3. In a series R-L circuit, a voltage of 10 V at 50 Hz frequency produces a current of 700 mA. In the same circuit with same magnitude of applied voltage with a frequency of 75 Hz produces a current of 500 mA. Find out the values of R and L in the circuit. **7-Marks**

**Ans. : Refer Example-2.21.1**

4. Derive the equations of active, reactive and apparent powers in a series R-L circuit with sinusoidal AC supply. **7-Marks**

**Ans. : Refer Section-2.19**

Scanned with CamScanner

5. Explain the term power factor. Explain the steps to obtain power factor of an AC circuit with parallel connection of R, L and C elements. **7-Marks**

**Ans. : Refer Section-2.20**

**May-2019**

6. For series resonant circuit with brief description draw the phasor diagrams for following conditions (i) At resonant (ii) Below resonant (iii) Above resonant. **3-Marks**

**Ans. : Refer Section-2.23**

7. Prove that the sum of readings of two watt meters connected to measure power in three phase circuit gives total power consumed by the circuit. **4-Marks**

**Ans. : Refer Section-2.38**

8. A series RLC circuit with L = 160 mH, C = 100 μF and R = 40 Ω is connected to a sinusoidal voltage $V_{(t)} = 40 \sin\omega t$, with ω = 200 rad/sec. Find (i) What is the Impedance of the circuit. (ii) Let the current at any instant in the circuit be $I_{(t)} = I_0 \sin(\phi t - F)$. Find $I_0$ (iii) What is the Phase ϕ ? **7-Marks**

**Ans. : Refer Example-2.29.1**

9. A balanced star connected load of (4 + j3) Ω per phase is connected to a balance 3 phase 400 V supply. Find the line current, power factor, active power and reactive power. **7-Marks**

**Ans. : Refer Example-2.38**

10. For A.C. sinusoidal current prove that $I_{rms} = 0.707\ I_m$. **3-Marks**

**Ans. : Refer Section-2.8.1**

11. Explain in brief single phase RC parallel circuit with phasor diagram. **3-Marks**

**Ans. : Refer Section-2.25.1**

**January-2020**

12. Compare series and parallel resonance in ac circuit.

**Ans. : Refer Section-2.27**

13. A single phase R-L-C circuit having resistance of 8 Ω, inductance of 80 mH and capacitance of 100 μF is connected across single phase ac 50 V, 50Hz supply. Calculate the current, power factor and voltage drop across inductance and capacitance. **7-Marks**

***Solution :***

R = 8 Ω, L = 80 mH, = 80 × $10^{-3}$ H, C = 100 μ$f$, 100 × $10^{-6}$ F, V = 150, $f$ = 50 Hz

**Impedance Z :**

1. Reactance $X_L = 2\pi f L = 2\pi \times 50 \times 80 \times 10^{-3}$

2. Reactance $X_C = \dfrac{1}{2\pi fc}$

$$= \frac{1}{2\pi \times 50 \times 100 \times 10^{-6}}$$

$$= \boxed{31.83\ \Omega}$$

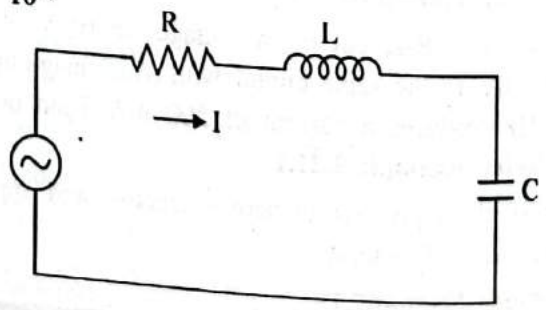


Scanned with CamScanner

3. Impedance $Z = R + j(X_L - X_C)$

$= 8 + j(25.13 - 31.83)$

$= 8 - j\,6.7 = \sqrt{8^2 + (6.7)^2}$

$Z = 10.44\ \Omega$

Current $I = \frac{V}{Z} = \frac{150}{10.44} = \boxed{14.37 \text{ Amp.}}$ ... **Ans.**

Power factor $\cos\phi = \cos\left(\tan^{-1}\frac{X}{R}\right) = \cos\left(\tan^{-1}\frac{-6.7}{R}\right) = \boxed{0.766 \text{ leading}}$ ... **Ans.**

Volt across coil $V_L = I X_L = 14.37 \times 25.13 = \boxed{V_L = 361.12 \text{ V}}$ ... **Ans.**

Volt across capacitor $V_C = I X_C = 14.37 \times 31.83 = \boxed{V_C = 475.4 \text{ V}}$ ... **Ans.**

14. Define the following terms in connection with AC waveforms : **3-Marks**
(1) Q-Factor (2) Power Factor (3) Form factor.

**Ans. : Refer Section-2.24 & 2.9**

15. Draw impedance triangle, Voltage triangle, Power triangle for single phase R-L series circuit. **4-Marks**

**Ans. : Refer Section-2.17**

16. Derive the relationship between Phase and Line values of voltages and currents in case of 3-phase Star-connection. **7-Marks**

**Ans. : Refer Section-2.34**

17. Define the terms : (1) Real power (2) Reactive power (3) Apparent power. **3-Marks**

**Ans. : Refer Section-2.19**

18. With neat circuit diagram and a phasor diagram prove that two watt meters are sufficient to measure total power in 3-phase system. **7-Marks**

**Ans. : Refer Section-2.38**

## December-2020

19. Define the following terms for AC (alternating current) signal : **4-Marks**
(i) Crest Factor (ii) Form Factor (iii) Average Value (iv) RMS Value.

**Ans. : Refer Section-2.7, 2.8, 2.9, 2010**

20. A current of 5 A flows through a non-inductive resistance in series with a choking coil when supplied at 250 V, 50 Hz. If the voltage across the resistance is 125 V and across the coil 200 V, calculate (i) impedance, reactance and resistance of the coil (ii) the power absorbed by the coil (iii) and total power. **7-Marks**

*Solution :*

As seen from the vector diagram of figure.

$BC^2 + CD^2 = 200^2$ ... (1)

$(125 + BC)^2 + CD^2 = 250^2$ ... (2)



Scanned with CamScanner

Subtracting equation (1) from (2), we get

$$(125 + BC)^2 - BC^2 = 250^2 - 200^2$$

$$\therefore \quad BC = 27.5 \text{ V};$$

$$CD = \sqrt{(200^2 - 27.5^2)} = 198.1 \text{ V}$$

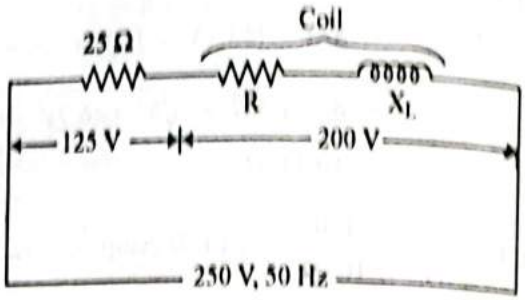


(1) Coil impedance $= \dfrac{200}{5} = 40\ \Omega$

$$V_R = IR = BC \text{ or } 5\ R = 27.5$$

$$\therefore \quad P = \frac{27.5}{5} = 5.5\ \Omega$$

Also $V_L = I \cdot X_L = CD = 198.1$

$$\therefore \quad X_L = \frac{198.1}{5} = 39.62\ \Omega$$

or $X_L = (402 - 5.52) = 39.62\ \Omega$

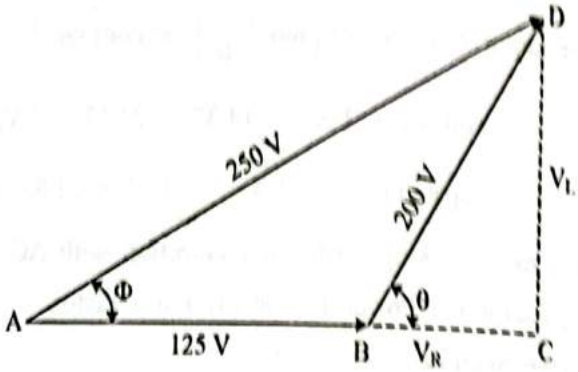


(2) Power absorbed by the coil is $= I^2R = 5^2 \times 5.5 =$ **137.5 W**

(3) Total power $= VI \cos\phi = 250 \times 5 \times \dfrac{AC}{AD} = 250 \times 5 \times \dfrac{AC}{AD} =$ **762.5 W**

The power may also be calculated by using $I^2R$ formula.

Series resistance $= \dfrac{125}{5} = 25\ \Omega$

$\therefore$ Total power $= 52 \times 30.5 =$ **762.5 W**

**21.** Prove that the current in purely inductive circuit lags its voltage by 90° and average power consumption in pure inductor is zero. **7-Marks**

**Ans. : Refer Section-2.15**

**22.** Write the comparison between series resonance and parallel resonance condition in AC circuit. **3-Marks**

**Ans. : Refer Section-2.27**

**23.** Derive the relation between line-voltage and phase-voltage for three-phase four wire star connection network. Also, prove that the total three-phase power consumption in star connection is $P_T = \sqrt{3}\ V_L\ I_L \cos\phi$. **4-Marks**

**Ans. : Refer Section-2.34**

■ ❋ ■

**Note : Also Refer GTU Paper Solutions at the End of the Book**

Scanned with CamScanner

CHAPTER 3

# Transformers

Contents


3.1 Introduction
3.2 Magnetic Field
3.3 Magnetic Flux
3.4 Electromagnet
3.5 Magnetic Flux Density (B)
3.6 Magnetomotive Force (M.M.F)
3.7 Magnetic Field Intensity (H)
3.8 Permeability
3.8.1 Relative Permeability
3.9 Reluctance
3.10 Relation Between B and H
3.11 Classification of Magnetic Materials
3.12 Magnetisation Curve (B-H Curve) ..... 2020
3.13 Electromagnetic Induction
3.14 Faradays Laws of Electromagnetic Induction
3.14.1 Faradays Laws
3.15 Definition of Transformer
5.16 Importance of Transformer in Transmission of Electricity
3.17 Symbolic Representation of Transformer
3.18 Working Principle of a Transformer ..... 2019, 2020
3.19 Construction of Transformer ..... 2019, 2020
3.20 Comparison of Core and Shell Type Transformers ..... 2020
3.21 E.M.F. Equation of Single Phase Transformer ..... 2019
3.22 Voltage Transformation Ratio
3.23 Ideal Transformer
3.24 Comparison of Practical Transformer and Ideal Transformer
3.25 Practical Transformer on No Load
3.26 Transformer on Load
3.27 Equivalent Resistances
3.28 Equivalent Leakage Reactance
3.29 An Actual Transformer
3.30 Equivalent Circuit of Transformer
3.31 Losses in Transformer
3.32 Efficiency of Transformer ..... 2019
3.33 Autotransformer
3.34 Advantages and Disadvantages of Autotransformer
3.35 Application of Autotransformer
3.36 Construction of Three Phase Transformer
3.37 Types of Transformers
3.38 Construction of Three Phase Transformer
3.38.1 Accessories of Transformers ..... 2020
3.39 Connections of Three-phase Transformers
* Exercise
* GTU Questions and Answers


## G.T.U. QUESTION PAPER STATISTICAL ANALYSIS

| | January-2019 | May-2019 | December-2020 |
|---|---|---|---|
| Marks | 8 | 22 | 21 |
| Repeated Questions Marks | – | 3 | 17 |

Scanned with CamScanner

## 3.1 INTRODUCTION :

- We all of us are Familiar with magnet.
- A material the posses the property of attracting iron pieces is known as magnet.
- There are two types of magnets :

| |
|---|
| 1. Permanent Magnets |
| 2. Electromagnet |

- While as per the discovery of Scientists Oersted, we have an electromagnet.
- Scientist Oersted found that when a conductor carries electric current, a magnetic field is produced around it. The property of such current is called magnetic effect of an electric current.

## 3.2 MAGNETIC FIELD :

- The area around a magnet where the effect of the magnetic force produced by the magnet can be detected is called the magnetic field.
- The magnetic fields are shown in Fig. 3.1 as lines in space.

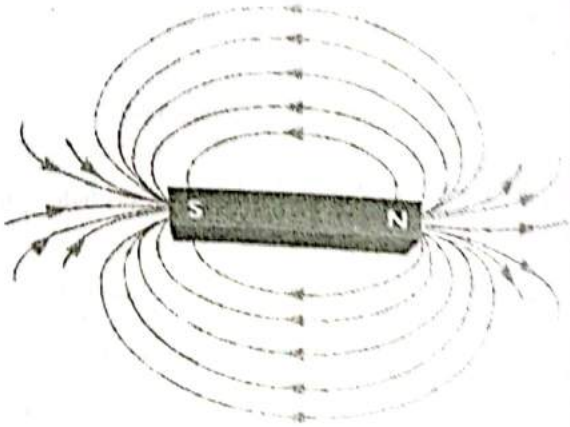


FIG. 3.1 : MAGNETIC FILED

## 3.3 MAGNETIC FLUX :

- The total number of magnetic lines of force in a magnetic field is called the magnetic flux.
- It is denoted by a symbol $\phi$.
- The unit of magnetic flux is Weber (Wb).

| |
|---|
| 1 Weber = $10^8$ magnetic lines |
| = $10^8$ Maxwells |

**Characteristics of magnetic flux lines :**

1. They have no physical existence.
2. They form closed paths.
3. They never intersect each other.
4. Lines of magnetic flux closer to each other and having the same direction repel each other.
5. Lines of magnetic flux closer to each other and having opposite direction attract each other.
6. They exert lateral pressure.

**WILHELM EDUARD WEBER (1804 – 1891)**

**Wilhen Eduard Weber (1804-1891)**

He was German physicist. Weber constructed the first electromagnetic telegraph in 1833. As an important contributor to the establishment of a system of absolute units for the electrical science. He Established a definition of electric current in an electromagnetic system based on the magnetic field produced by the current.

## 3.4 ELECTROMAGNET :

- An electromagnet is a core of iron or steel around which a coil is wound. When a current is passed through the coil, the core is magnetised temporarily.

Scanned with CamScanner

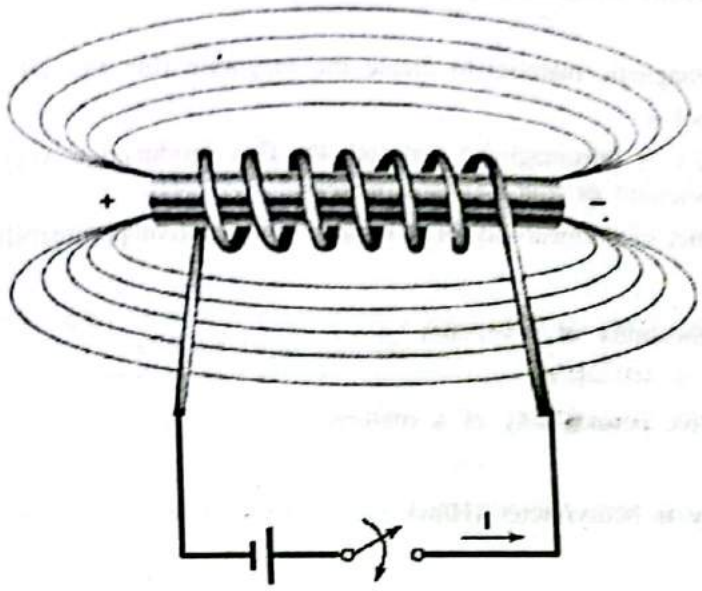


FIG. 3.2 : ELECTROMAGNET

## 3.5 MAGNETIC FLUX DENSITY (B) :

- It is defined as the flux per unit area at right angle to the flux.
- It is denoted by B.
- Its unit is $Wb/m^2$ (or Tesla).
- Mathematically,

$$\boxed{B = \frac{\phi}{A}} \qquad \phi = \text{flux in Wb}, \qquad A = \text{area of cross-section } (m^2)$$

## 3.6 MAGNETOMOTIVE FORCE (M.M.F) :

- It is defined as the force that tends to establish the flux through a magnetic circuit.
- It is equal to the product of the current ($I$) flowing through the coil and the number of turns ($N$) of the coil. Thus,

$$\boxed{m.m.f. = NI}$$

- Its unit is ampere–turns (or AT)
- It is analogous to e.m.f. in electric circuit. The term m.m.f. is normally referred to as ampere–turns (AT).

## 3.7 MAGNETIC FIELD INTENSITY (H) :

- Magnetic field intensity is defined as the magnetomotive force per unit length of the magnetic flux path.
- It is denoted by H.
- Its unit is ampere turns/meter (AT/m)

$$\therefore \quad \boxed{H = \frac{mmf}{l} = \frac{NI}{l} \text{ AT/m}}$$

where,

N = no. of turns

I = Current (A)

$l$ = length of magnetic flux path

Scanned with CamScanner

## 3.8 PERMEABILITY :

- It is the ability of a magnetic material to create the magnetic flux through it.
- It is denoted by symbol $\mu$.
- When m.m.f is applied to a ferromagnetic material, the flux produced is very large as compared to the flux produced in air, vacuum or non-magnetic material.
- It is given by the product of permeability of a vacuum and relative permeability of a magnetic material.

  i.e. $\boxed{\mu = \mu_o \mu_r}$

  where $\mu_o$ = permeability of a vacuum

  $= 4 \pi \times 10^{-7}$ H/m

  $\mu_r$ = relative permeability of a material

**Unit :**

- The unit of permeability is henry/meter (H/m)

### 3.8.1 Relative Permeability :

- The relative permeability of a medium or material is defined as the ratio of the flux density produced in the material to the flux density produced in vacuum (or air) by the same magnetic field intensity.
- It is denoted by $\mu_r$.
- Mathematically,

$$\text{Relative permeability} = \frac{\text{Flux density in the medium}}{\text{Flux density in vacuum}}$$

$$\therefore \quad \boxed{\mu_r = \frac{\text{Flux density in the medium}}{\text{Flux density in vacuum}}}$$

For air or non-magnetic material $\mu_r = 1$

## 3.9 RELUCTANCE :

- It is defined as the opposition offered by a magnetic circuit to the establishment of the magnetic flux.
- It is denoted by symbol S.
- It is directly proportional to the length of the magnetic circuit and inversely proportional to the area of cross-section of the magnetic path.

$$\boxed{\text{Mathematically, } S = \frac{l}{\mu_o \mu_r A}}$$

where, $l$ = length of the magnetic path

$\mu_o$ = $4\pi \times 10^{-7}$ H/m

$\mu_r$ = relative permebaility of a material

A = cross sectional area

- Its unit is AT/Wb
- It is analogous to resistance in electric circuit.

## 3.10 RELATION BETWEEN B AND H :

- The flux density $B = \frac{\phi}{A}$ that is produced in any material is found to be directly proportional to the magnetising force H.
- Thus greater the magnetising force H, greater will be the magnetic flux density produced in the material.

Scanned with CamScanner

i.e. $B \alpha H$

$\therefore \frac{B}{H} = \text{constant} = \mu$

- The $\frac{B}{H}$ ratio in any material is a constant which is equal to the absolute permeabilitty $\mu$ of the material.

$\therefore B = \mu H = \mu_o \cdot \mu_r H$ (in a medium)

$\therefore B = \mu_o H$ (in Air where $\mu_r = 1$)

**Syllabus Topic : Magnetic Materials**

## 3.11 CLASSIFICATION OF MAGNETIC MATERIALS :

- Magnetic materials are classified according to their relative permeability :

1. **Ferromagnetic materials :** Their relative permeability is greater than unity and dependent on field strength. These are easily magnetised.
   Examples : Iron, Cobalt and NIckel
2. **Paramagnetic materials :** Relative permeability is slightly greater than unity and they are slightly magnetized.
   Examples : Aluminium, Platinum and Oxyzen
3. **Diamagnetic Materials :** Relative permeability is slightly less than unity and have the opposite effect of paramagnetic materials.
   Examples : Silver, Copper, Bismuth and Hydrogen

**Syllabus Topic : B-H Characteristics**

## 3.12 MAGNETISATION CURVE ( B-H CURVE) :

- The graph between the flux density (B) and magnetic field intensity (H) of a magnetic material is called the magnetisation curve or B-H curve.

**1. For Non-Magnetic Materials**

- In case of air or non-magnetic material, the flux density (B) is proportional to magnetic field intensity (H).

$B = \mu_0 H$

But $\mu_0 = 4\pi \times 10^{-7}$ = Costant

$\therefore$ $\boxed{B \alpha H}$

- Therefore, the graph of B versus H is a straight line through the origin as shown in Fig. 3.3.

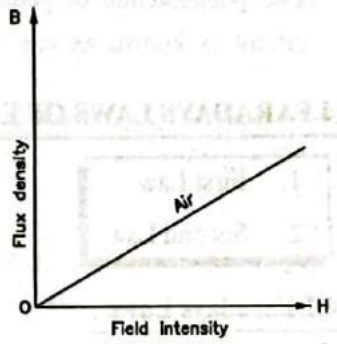


**FIG. 3.3 : B-H CURVE FOR NON-MAGNETIC MATERIALS**

**2. Magnetic Materials :**

- For magnetic materials. The relation between B and H is given by

$B = \mu_0 \cdot \mu_r \cdot H$

- A typical B-H curve for magnetic material is shown in fig. 3.4.
- The B-H curve is not linear.

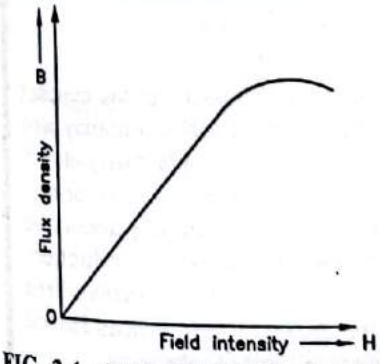


**FIG. 3.4 : B-H CURVE FOR MAGNETIC MATERIALS**

Scanned with CamScanner

- The B-H curves of a few magnetic material are shown in Fig. 3.5(a).

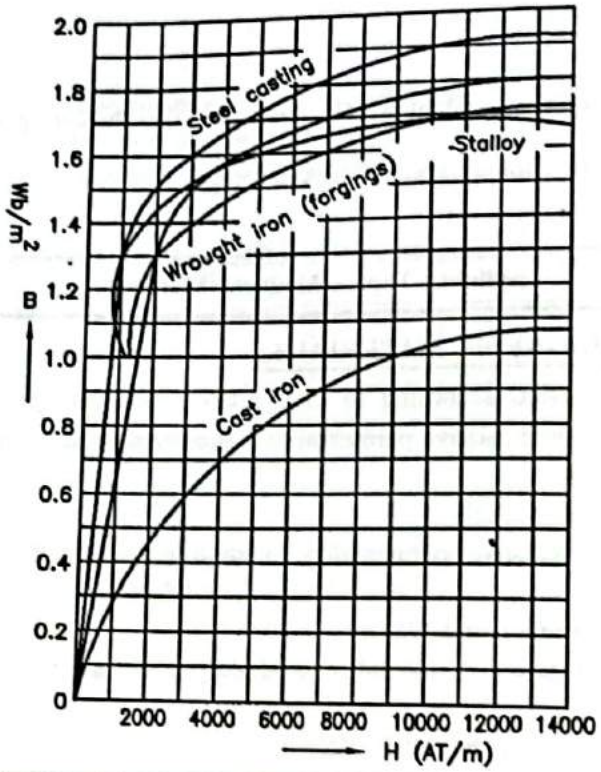


FIG. 3.5(a) : MAGNETISATION CHARACTERISTICS

## 3.13 ELECTROMAGNETIC INDUCTION :

- The phenomenon of generation of emf and production of current by changing the magnetic flux in the circuit is known as electromagnetic induction.

## 3.14 FARADAYS LAWS OF ELECTROMAGNETIC INDUCTION :

1. First Law
2. Second Law

### 3.14.1 Faradays Laws :

- Michael Faraday summed up conclusions of his experiments on electromagnetic induction into two laws, known as Faraday's laws of electro-magnetic induction.

**First law :** It states :

- Whenever a conductor cuts across the magnetic field, an e.m.f. is induced in the conductor.

**OR**

- Whenever the magnetic flux linking with a circuit (or a coil) changes, an e.m.f. is induced in the circuit.

**MICHAEL FARADAY (1791 – 1867)**

**Michael Faraday**
**(1791-1867)**

Faraday established the basis for the concept of the electromagnetic field in physics. Faraday also established that magnetism could affect rays of light and that there was an underlying relationship between the two phenomena. He similarly discovered the principle of electromagnetic induction, diamagnetism, and the laws of electrolysis. His inventions of electromagnetic rotary devices formed the foundation of electric motor technology.

Scanned with CamScanner

**Explanation :**

- When the bar magnet is taken nearer to the coil, there is a sudden deflection in the galvanometer. If now the bar magnet is taken away from the coil, there is again deflection but in the opposite direction.
- The deflection of the galvano meter indicates that the e.m.f. is induced in the coil.

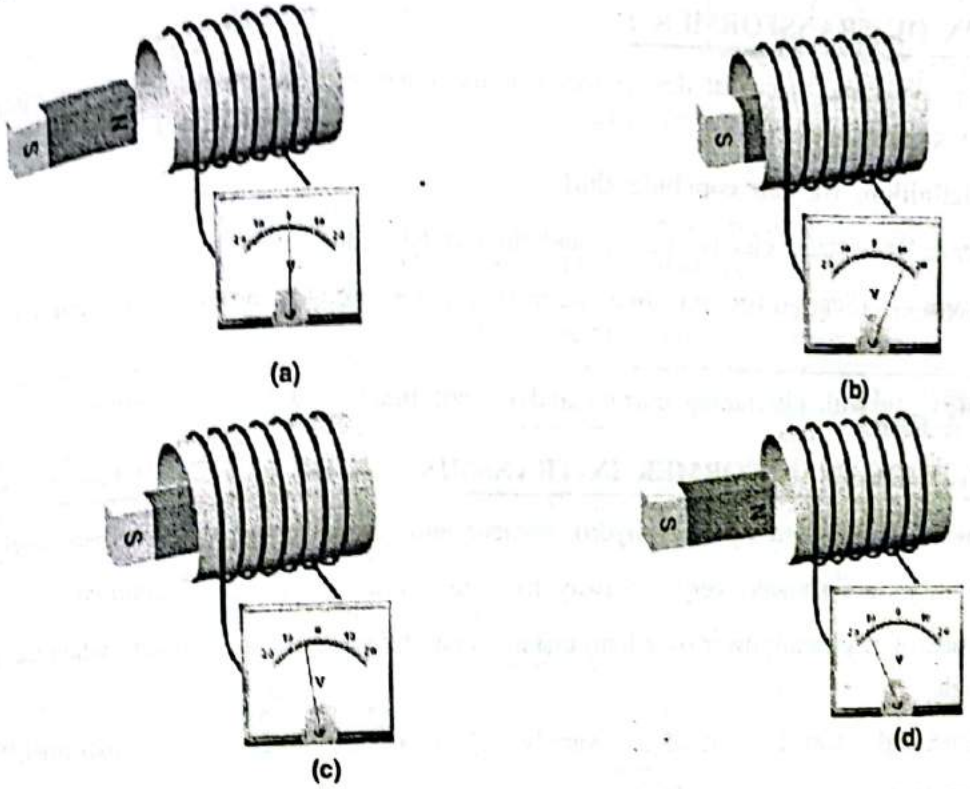


**FIG. 3.5(b)**

**Second law :** It states :

- The magnitude of the induced e.m.f. in a coil (or circuit) is equal to the rate of change of flux linkages.

**Explanation :** Suppose

$N$ = no. of turns on the coil | $\phi_2$ = final value of flux (Wb)

$\phi_1$ = initial value of flux (Wb) | $t$ = time (sec) for the change of flux.

$\therefore$ Initial flux linkages = $N\,\phi_1$

and final flux linkages = $N\,\phi_2$

$$\therefore \text{ Rate of change of flux linkage} = \frac{N\phi_2 - N\phi_1}{t}$$

$$= \frac{N(\phi_2 - \phi_1)}{t} \text{ Wb turn/sec}$$

- According to Faraday's second law of electromagnetic induction,

$$\text{Induced e.m.f., } e = \frac{N(\phi_2 - \phi_1)}{t} \text{ Volts}$$

$$= N\,\frac{\phi_2 - \phi_1}{t}$$

- In differential form,

$$e = N\frac{d\phi}{dt} \text{ Volts}$$



Scanned with CamScanner

- Usually a minus sign is given to the right hand side expression which indicates that e.m.f. is induced in such a direction which opposes the cause (i.e. change in flux) that produces it according to Lenz's law.

$$\therefore \quad \boxed{e = -N \frac{d\phi}{dt} \text{ Volt}}$$

## 3.15 DEFINITION OF TRANSFORMER :

- A transformer is a static electrical device which transfer a.c. electric power from one circuit to another circuit at the same frequency.
- **From this definition, we can conclude that**
  - (1) Transformer is a static electric device and do not have any rotating parts.
  - (2) It transform electrical power from one circuit to another circuit at the same frequency but at different voltage.
  - (3) It operate only with alternating current and do not function with D.C. supply.

## 3.16 IMPORTANCE OF TRANSFORMER IN TRANSMISSION OF ELECTRICITY :

- Electrical Power is generated by large hydro, nuclear and steam power stations respectively.
- The power stations are situated very far away from the various cities (load centres).
- The transmission of electrical power over long distances can be achieve economically when the transmission voltage is high.
- The stepped up and stepped down of a.c. supply voltage is accomplished by transformer.
- Thus transformer plays important role in power system.

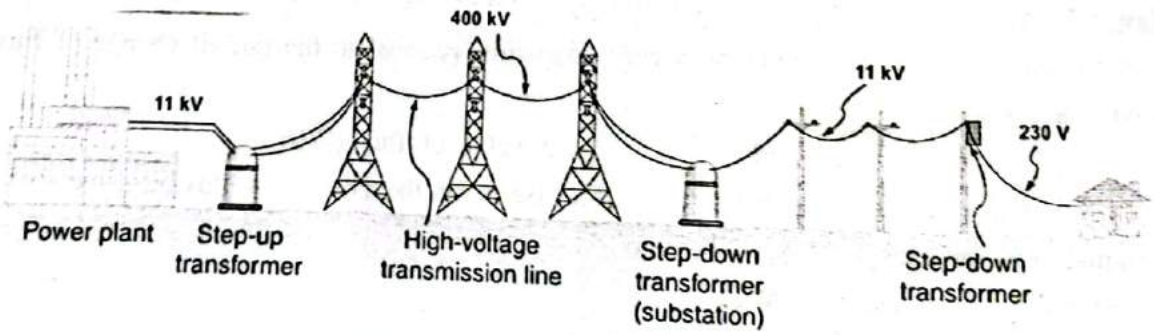


POWER TRANSMISSION SYSTEM

## 3.17 SYMBOLIC REPRESENTATION OF TRANSFORMER :

- A Transformer consists of three major parts :

| | |
|---|---|
| 1. | Magnetic Core |
| 2. | Primary Winding |
| 3. | Secondary Winding |

- Primary and Secondary windings are represented by inductive coils having resistance and reactance, where as magnetic core is represent by two lines between the primary and secondary winding as shown in fig. 3.6.

Scanned with CamScanner

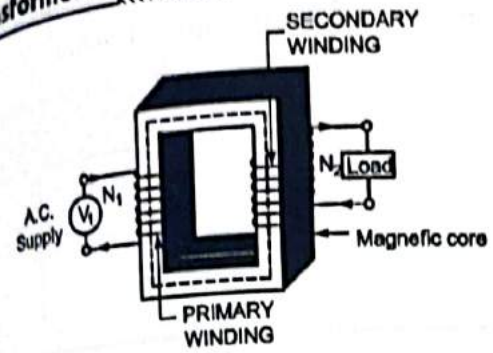


FIG. 3.6 : PRELIMINARY CONSTRUCTION OF TRANSFORMER

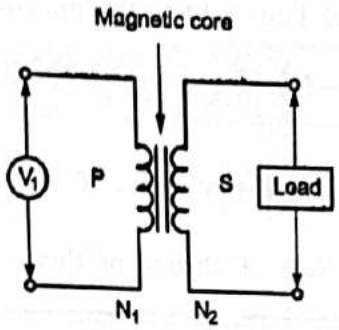


FIG. 3.7 : SYMBOL OF TRANSFORMER

- The winding which is connected to the a.c. supply is called the primary winding (P). The other winding which is connected to the load is called the secondary winding (S).

**Syllabus Topic :** Working Principle of Single Phase Transformer

## 3.18 WORKING PRINCIPLE OF A TRANSFORMER : GTU, January-2019, 2020

**GTU Questions**

1. Briefly describe the operating principle of a transformer. **[January-2019, 2020, 4-Marks]**

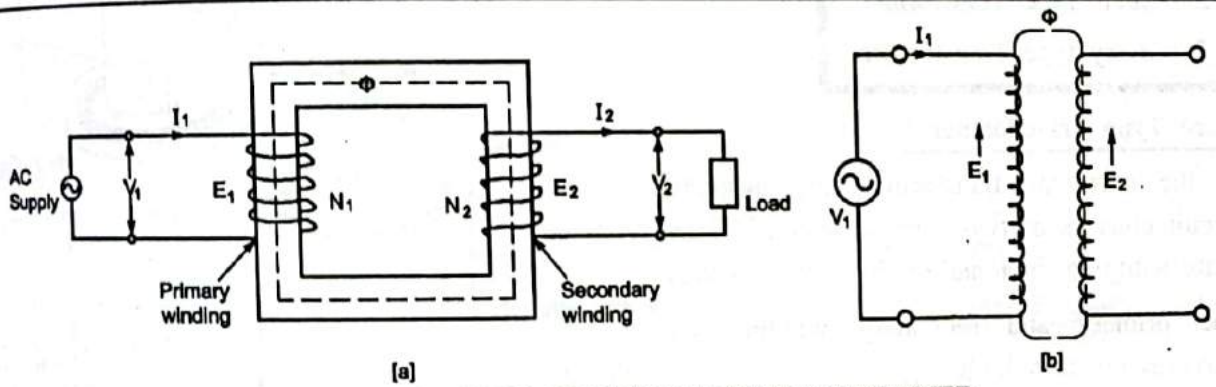


FIG. 3.8 : WORKING PRINCIPLE OF TRANSFORMER

- The basic working principle of a transformer is electromagnetic induction.
- A simple form of a transformer is shown in Fig. 3.8. It consists of two separate windings placed over the laminated silicon steel core.
- The winding to which a.c. supply is connected is called primary winding and the winding to which load is connected is called a secondary winding.

**Principle of Operation :**

- When an alternating voltage $V_1$ is applied to the primary winding, the current $I_1$ flows in it producing magnetic flux $\phi$ in the core as shown in Fig. 3.8.
- This alternating flux links with both primary and secondary windings.
- As per Faraday's Laws, self induced e.m.f. $E_1$ in the primary winding is

$$\boxed{E_1 = -N_1 \frac{d\phi}{dt}}$$

where,

$N_1$ = Number of turns of primary winding

$\frac{d\phi}{dt}$ = Rate of change of flux.

- The alternating flux links with the secondary winding, the e.m.f. is induced in it called mutually induced e.m.f.

Scanned with CamScanner

- According to Lenz's Law, the direction of induced e.m.f. is opposite to the applied voltage $V_1$.

$$E_2 = -N_2 \frac{d\phi}{dt}$$

where,

$N_2$ = Number of turns of secondary winding

$\frac{d\phi}{dt}$ = Rate of change of flux

**Syllabus Topic : Construction of Single Phase Transformer**

## 3.19 CONSTRUCTION OF TRANSFORMER :

**GTU, May-2019; Dec. 2020**

**GTU Questions**

1. Explain with diagram construction of core type and shell type transformer.

**[May-2019, December-2020, 7-Marks]**

- There are three types of transformer :

1. Core Type Transformer
2. Shell Type Transformer
3. Berry type Transformer

### 1. Core Type Transformer :

- In the core-type transformer, the magnetic circuit consists of two vertical sections called limbs with two horizontal sections, called yokes.
- The primary and secondary winding are provided on each limb.
- The low voltage winding is kept inside near the core, while the high voltage winding is placed on it.
- This type of winding arrangement in the core type transformer provides good magnetic coupling between primary and secondary winding.

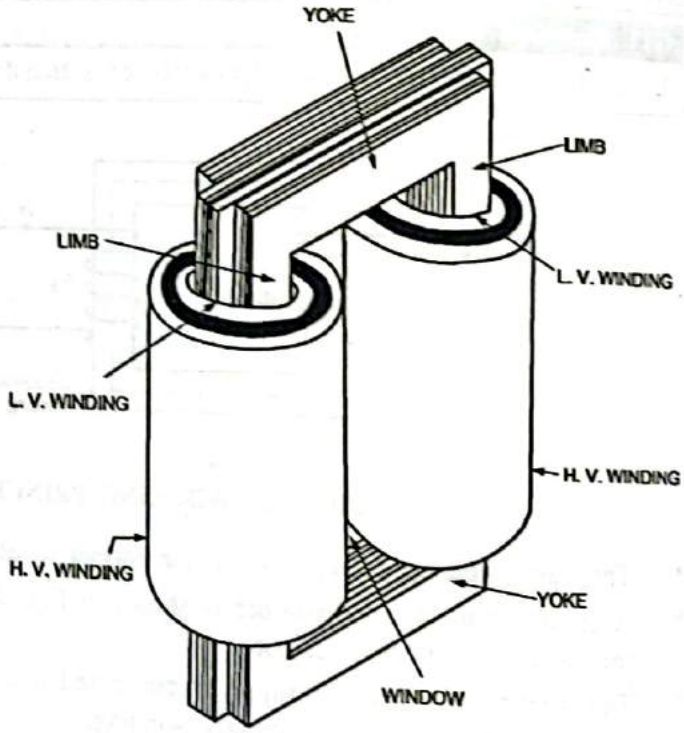


**FIG. 3.9 : CORE TYPE TRANSFORMER**

- Thus, the two windings are arranged as concentric coils such a windings is therefore, called **concentric winding** or **cylindrical winding.**
- The laminations for core-type transformers are of **'U'** and **'I'** shape and **'L'** shape as shown in Fig. 3.10.
- In most of the core type transformers circular cylindrical coils are used because of their mechanical strength, while placing these coils, an insulation layer (bakelite or thick board) is provided between core and lower coil and also between the two coils.
- It should be noted that low voltage winding is wound near the core since it is easiest to insulate. If the high voltage winding is wound near the core a heavy insulation will have to be provided to avoid earth leakage.

Scanned with CamScanner

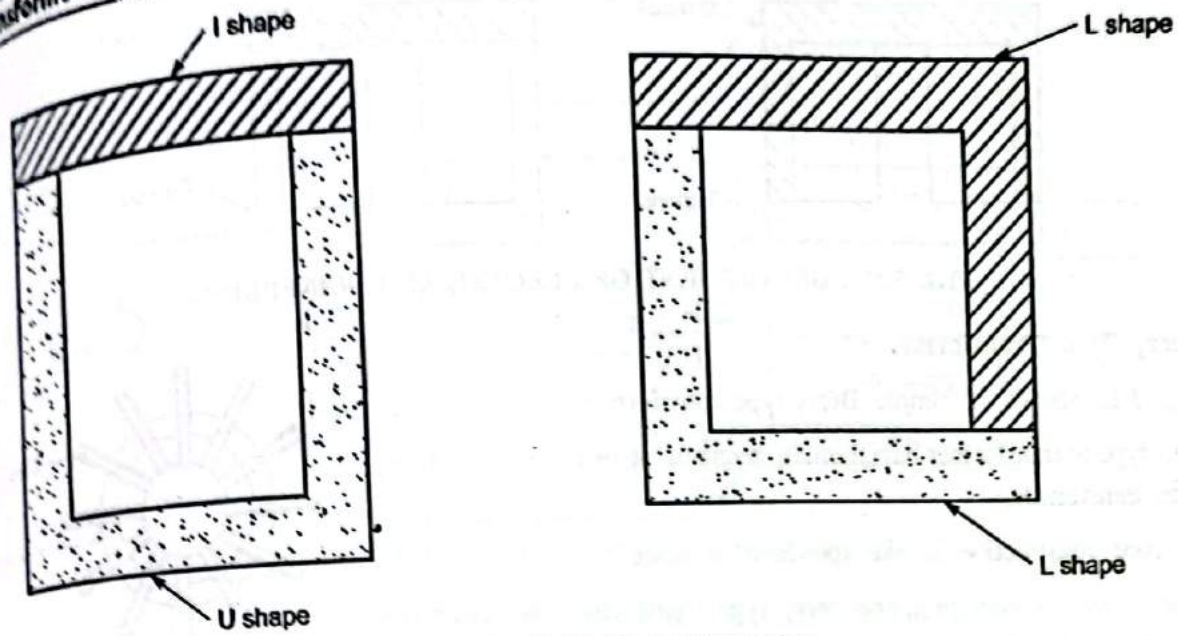


FIG. 3.10 : CORE LAMINATIONS

**Advantages :**

(1) Natural cooling is more effective

(2) Construnction is simple

(3) The coils can be easily withdrawn for repair

**2. Shell-Type Transformer :**

- In the shell-type transformer both primary and secondary windings are wound on the central limb and the two outer limbs complete the low reluctance flux paths.
- Windings are normally of sandwich type.
- The Top and Bottom coils, which are near the yoke of the core, are of L.V. winding only.
- The Laminations for shell-type transformer is made up of either U and T shape or E and I shape.

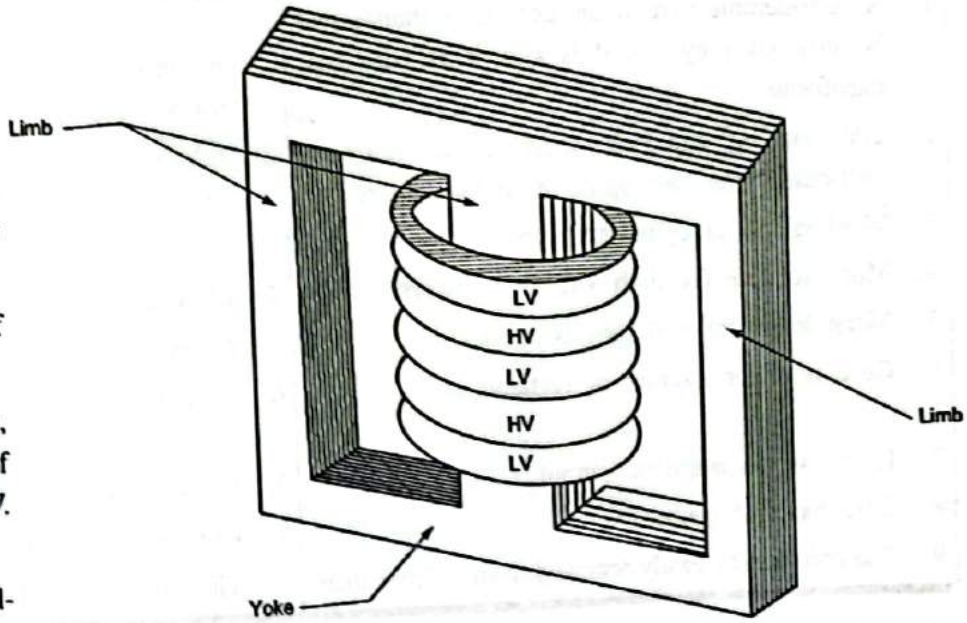


FIG. 3.11 : SHELL-TYPE TRANSFORMATION

**Advantages :**

(1) Better Mechanical Protection to the winding.

**Disadvantages :**

(1) Natural cooling is poor

(2) The coils can not be easily withdrawn for repair.

Scanned with CamScanner

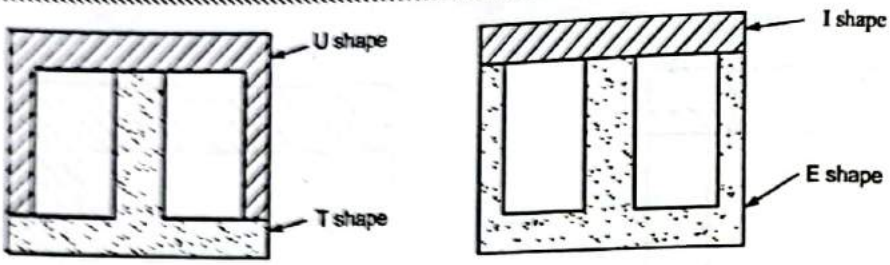


FIG. 3.12 : DEPARTMENT OF ELECTRICAL ENGINEERING

**(5) Berry Type Transformer :**

- Fig. 3.13 shows a simple Berry-type transformer.
- This type of transformer having multi magnetic paths is known as Berry-type transformer.
- Its core constraction is like spokes of a wheel.
- Due to this constraction, the berry type transformer has distributed magnetic circuit.
- The low voltage winding placed inside and high voltage winding placed outside as shown in Fig. 3.13.

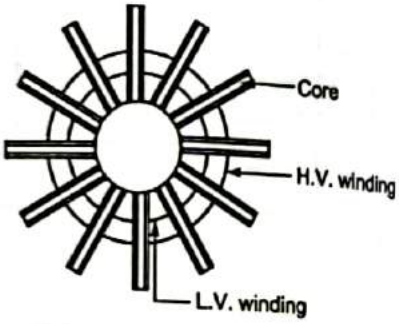


FIG. 3.13 : BERRY TYPE TRANSFORMER

## 3.20 COMPARISON OF CORE AND SHELL TYPE TRANSFORMERS : GTU, Dec. 2020

| Core Type Transformer | Shell-Type Transformer |
|---|---|
| 1. A considerable part of the core of a transformer is surrounded by a coil is known as core type transformer. | 1. A considerable part of the winding of transformer is surrounded by a core is known as shell-type transformer. |
| 2. L.V. winding and H.V. windings are normally distributed over two opposite limbs of core. | 2. L.V. and H.V. windings are wound on the central limb of the core. |
| 3. Winding are of cylindrical type. | 3. Winding are of sandwich type. |
| 4. More suitable for high voltage transformer. | 4. More economical for low voltage transformer. |
| 5. Mean length of coil turn is shorter. | 5. Mean length of coil turn is longer. |
| 6. Core is either circular or rectangular. | 6. Core is either rectangular or cylindrical or spiral in shape. |
| 7. It has single magnetic circuit. | 7. It has a double magnetic circuit. |
| 8. Core has two limbs. | 8. Core has three limbs. |
| 9. The coils can be easily removed from maintenance. | 9. The coils can not be removed easily. |

## 3.21 E.M.F. EQUATION OF SINGLE PHASE TRANSFORMER : GTU, May-2019; Dec. 2020

**GTU Questions**

**1.** Derive the E.M.F. equation of a single phase transformer. **[May-2019, Dec. 2020, 4-Marks]**

- Let the flux at any instant be given by

$$\phi = \phi_m \sin \omega t \quad \text{... (1)}$$

where $\phi_m$ is the maximum value of flux, $\phi$ is the instantaneous flux and $\omega$ is angular frequency.

Scanned with CamScanner

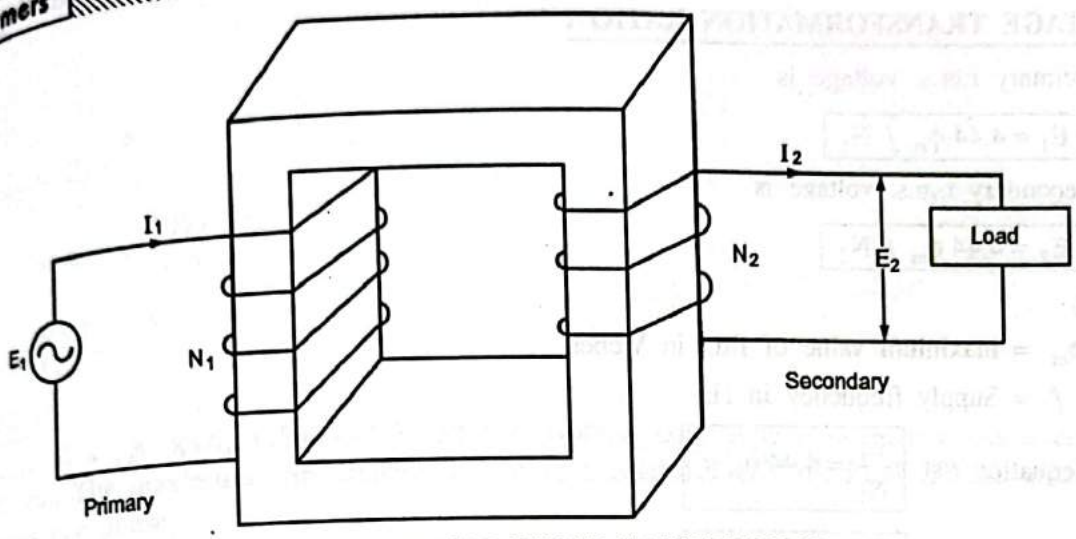


**FIG. 3.15 : SINGLE PHASE TRANSFORMER**

The emf induced in a winding having N turns is given by Faraday's Law as

$$e = -N\frac{d\phi}{dt}$$

$$= -N\frac{d}{dt}(\phi_m \sin\omega t) \qquad [\because \phi = \phi_m \sin\omega t]$$

$$= -N\,\phi_m \cos\omega t \cdot \omega \qquad \left[\because \frac{d}{dt}\sin\omega t = \cos\omega t \cdot \omega\right]$$

$$= -N\,\omega\,\phi_m \cos\omega t$$

$$e = -N\,\omega\phi_m \sin\left(\frac{\pi}{2} - \omega t\right) \qquad \left[\because \cos\omega t = \left(\frac{\pi}{2} - \omega t\right)\right]$$

$$= N\,\omega\phi_m \sin\left(\omega t - \frac{\pi}{2}\right) \qquad \left[\because \sin\left(\frac{\pi}{2} - \omega t\right) = -\sin\left(\omega t - \frac{\pi}{2}\right)\right] \qquad \text{... (2)}$$

Equation (2) may be written as,

$$e = E_m \sin\left(\omega t - \frac{\pi}{2}\right)$$

where,

$E_m = N\,\omega\,\phi_m$ = Maximum value of $e$.

The r.m.s. value of e.m.f. is given by

$$E_{rms} = E = \frac{E_m}{\sqrt{2}}$$

$$\therefore\ E = \frac{N\omega\phi_m}{\sqrt{2}} = \frac{N(2\pi f)\,\phi_m}{\sqrt{2}} \qquad [\because \omega = 2\pi f]$$

$$= 4.44\, f\, \phi_m N$$

$$\therefore\ \boxed{\begin{aligned} E &= 4.44\, f\, \phi_m\, N \\ &= 4.44\, f\, B_m\, A_i \cdot N \end{aligned}} \qquad \left[\because B_m = \frac{\phi_m}{A_i}\right] \qquad \text{... (3)}$$

Equation (3) is called the e.m.f equation of a transformer.

Scanned with CamScanner

## 3.22 VOLTAGE TRANSFORMATION RATIO :

- The primary r.m.s. voltage is

$$\boxed{E_1 = 4.44\, \phi_m\, f\, N_1} \quad \text{... (4)}$$

- The secondary r.m.s. voltage is

$$\boxed{E_2 = 4.44\, \phi_m\, f\, N_2} \quad \text{... (5)}$$

where,

$\phi_m$ = maximum value of flux in Weber.

$f$ = Supply frequency in Hz.

From equation (4) $\boxed{\dfrac{E_1}{N_1} = 4.44\, \phi_m\, f}$ ... (6)

From equation (5) $\boxed{\dfrac{E_2}{N_2} = 4.44\, \phi_m\, f}$ ... (7)

Equation (6) and (7) show that the voltage per turn in both the winding is the same.

$$\therefore \quad \frac{E_1}{N_1} = \frac{E_2}{N_2}$$

$$\therefore \quad \boxed{\frac{E_2}{E_1} = \frac{N_2}{N_1} = K} \quad \text{... (8)}$$

- This constant K is known as voltage transformation ratio.
- The ratio of secondary voltage to primary voltage is called voltage transformation ratio.
  - (i) If $N_2 > N_1$ i.e. $K > 1$, then transformer is called step-up transformer.
  - (ii) If $N_2 < N_1$ i.e. $K < 1$, then transformer is called step-down transformer.
  - (iii) If $N_2 = N_1$ i.e. $K = 1$, then transformer is called one-to-one transformer.

**Example-3.1 :**

**A single pahse transformer has 350 primary and 1050 secondary turns. The primary is connecte to 400 V, 50 a.c. supply. If the net cross core is 50 cm². Calculate the maximum flux density in the core and induced e.m.f. in the secondary winding.**

***Solution :***

Primary turns, $N_1 = 350$

Secondary truns, $N_2 = 1050$

Primay voltage, $V_1 = 400$ V

Net cross sectional area $A_i = 500\ cm^2$

$= 50 \times 10^{-4}\ m^2$

Frequency, $f = 50$ Hz

$B_m = ?$

$E_2 = ?$

$E_1 = 4.44 \times f \times \phi_m N_1$

$= 4.44\, f\, B_m \cdot A_i \cdot N_1 \qquad [\because \phi_m = B_m \cdot A_i]$

$400 = 4.44 \times B_m \times 50 \times 10^{-4} \times 50 \times 350$

$\therefore \quad B_m = \boxed{1.0296\ Wb/m^2}$

Scanned with CamScanner

Voltage transformation ratio

$$\therefore \frac{E_2}{E_1} = \frac{N_2}{N_1}$$

$$\therefore E_2 = E_1 \times \frac{N_2}{N_1}$$

$$= 400 \times \frac{1050}{350}$$

$$= \boxed{1200 \text{ V}}$$

**Example-3.2 :**

**The core of a 150 kVA, 11000/440 V, 50 Hz, 1-phase core type transformer has a cross section of 20 × 20 cm. The maximum core density is not to exceed 1.3 Wb/m². Find (1) the number of *h.v.* and *l.v.* turns per phase.**

**Solution :**

$V_1 = 11000$ V, $V_2 = 440$ V, kVA = 150

$A_i = 20 \times 20$ cm $= 400$ cm$^2 = 400 \times 10^{-4}$ m$^2$

$B_m = 1.3$ Wb/m$^2$

$f = 50$ Hz

Using Formula,

$$E_2 = 4.44\, f\, \phi_m\, N_2$$

$$= 4.44\, f\, B_m \cdot A_i \cdot N_2$$

$$\therefore \quad 440 = 4.44 \times 50 \times 1.3 \times 400 \times 10^{-4} \times N_2$$

$$\therefore \quad N_2 = \frac{440}{115440 \times 10^{-4}} = 38.11 \approx \boxed{38 \text{ turns}}$$

Turns ratio,

$$\frac{N_1}{N_2} = \frac{E_1}{E_2}$$

$$\therefore \quad N_1 = N_2 \cdot \frac{E_1}{E_2} = 38 \times \frac{11000}{440} = \boxed{950 \text{ turns}}$$

**Example-3.3 :**

**An ideal 25 kVA transformer has 500 turns on the primary winding and 40 turns on the secndary winding. The primary is connected to 3000 V, between 50 Hz supply. Calculate (1) primary and secondary curretns on full load (2) secondary e.m.f. (3) maximum core flux.**

**Solution :**

Given :

kVA = 25, $N_1 = 500$, $N_2 = 40$

$V_1 = 3000$ V, $f = 50$ Hz

To find :

$I_1$ $I_2$, $E_2$ and $\phi_m$

$$\text{kVA Rating} = V_1 \times I_1 \times 10^{-3}$$

$$\therefore \quad I_1 = \frac{\text{kVA Rating}}{V_1}$$

Primary current,

$$I_1 = \frac{\text{kVA Rating}}{V_1} \times 10^3 = \frac{25 \times 10^3}{3000} = 8.33 \text{ A}$$



Scanned with CamScanner

$$\frac{N_2}{N_1} = \frac{V_2}{V_1}$$

$$\therefore \quad V_2 = \frac{N_2}{N_1} \times V_1 = \frac{400}{500} \times 3000 = 240 \text{ V}$$

Secondary current :

$$I_2 = \frac{\text{kVA Rating}}{V_2} \times 10^3 = \frac{25 \times 10^3}{240} = 104.16 \text{ A}$$

**To Find $E_2$ :**

$$\frac{E_1}{E_2} = \frac{N_1}{N_2}$$

$$\therefore \quad E_2 = E_1 \times \frac{N_2}{N_1}$$

$$\therefore \quad E_2 = 3000 \times \frac{40}{500} = 240 \text{ V}$$

$$E_2 = 4.44 \, f \, \phi_m \cdot N_2$$

$$\therefore \quad 240 = 4.44 \times 50 \times \phi_m \times 40$$

$$\therefore \quad \phi_m = \frac{240}{4.44 \times 50 \times 40}$$

$$= \boxed{0.027 \text{ Wb}}$$

**Exercise-3.1**

1. A 40 kVA, single phase transformer has 400 turns on primary and 100 turns on secondary. The primary is connected to 2000 V, 50 Hz supply. Determine : (i) The secondary Voltage on open circuit. (ii) The current flowing through the two windings on full load. (iii) The maximum value of flux.
   [**Ans. :** $I_1 = 20$ A, $I_2 = 80$ A, $E_2 = 500$ V, $\phi_m = 22.52$ mWb]
2. A single phase transformer is having primary and secondary turns are 300 and 750 respectively. The net area of core 64 sq. cm. If primary voltage is 440 V, and 40 Hz frequency. Calculate : (1) Maximum flux density, (2) Secondary induced emf [**Ans. :** $B_m = 1.03$ Wb/m$^2$, $V_2 = 1100$ V]
3. A 25 kVA transformer has 500 turns on the primary and 50 turns on the secondary winding. The primary is connected to 3000 V, 50 Hz supply. Find (i) the full load primary and secondary currents, (ii) secondary induced emf, (iii) maximum flux in core. [**Ans. :** $I_2 = 83.3$ A, $E_2 = 300$ V, $\phi_m = 0.027$ Wb]

**Syllabus Topic : Ideal Transformer**

## 3.23 IDEAL TRANSFORMER :

- The transformer, in which no energy is wasted in the core and in the winding is called the ideal transformer.
- An ideal transformer is an imaginary transformer which has the following properties.
  (1) Its primary and secondary winding resistances are negligible.
  (2) The core has infinite permeability ($\mu$).
  (3) Its leakage flux and leakage inductances are zero.
  (4) There are no losses.
  (5) The working efficiency is 100%.

Scanned with CamScanner

**Operation and Phasor Diagram :**

An ideal transformer is shown in Fig. 3.16(a). It consists of two coils. The winding connected to the supply ($V_1$) is called the primary winding. The winding connected to the load is called the secondary winding.

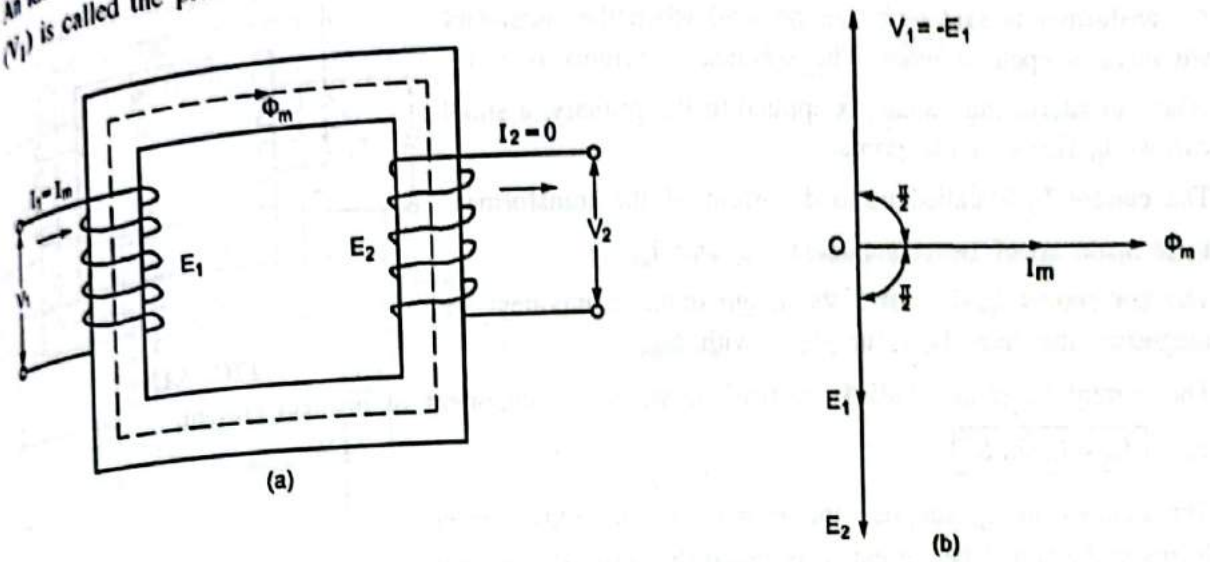


**FIG. 3.16 : IDEAL TRANSFORMER**

- Since the ideal transformer has zero primary and zero secondary impedance, the voltage induced in the primary $E_1$ is equal to the applied voltage $V_1$.
- Similarly, the secondary voltage $V_2$ is equal to the secondary induced voltage $E_2$.
- When the primary winding connected to the supply, the primary draws the magnetizing current $I_m$ only.
- The alternating currents $I_m$ produces an alternating flux $\phi_m$ which is in Same phase with $I_m$.
- This changing flux $\phi_m$ is linked both with the primary and the secondary windings. Therefore it produces self-induced e.m.f. in the primary. This self-induced e.m.f. $E_1$ is at every instant, equal and opposite to $V_1$. The magnetizing current $I_m$ lags $V_1$ by 90°.

$$\boxed{E_1 = -V_1 \text{ and } E_2 = V_2}$$

- Flux $\phi_m$ also links with secondary winding and induces emf $E_2$ in it. This emf lags 90° behind flux. Fig. 3.16(b) shows the vector diagram..

## 3.24 COMPARISON OF PRACTICAL TRANSFORMER AND IDEAL TRANSFORMER :

| Practical Transformer | Ideal Transformer |
|---|---|
| 1. There are copper and eddy-current losses. | 1. There is no loss. |
| 2. Efficiency is 93 to 97%. | 2. Efficiency is 100%. |
| 3. There is leakage of flux. | 3. There is no leakage flux. |
| 4. Voltage regulation in never zero %. | 4. Voltage regulation is 0%. |
| 5. Its winding contains ohmic resistance also. | 5. It consists of purely inductive coils, wound on losses core. |
| 6. All constructed transformer are practical transformer. | 6. It is impossible to construct an ideal transformer. |

Scanned with CamScanner

Syllabus Topic : Practical Transformr

## 3.25 PRACTICAL TRANSFORMER ON NO LOAD :

- A transformer is said to be on no load when the secondary windings is open-circuited. The secondary currents is zero.
- When an alternating voltage is applied to the primary, a small current $I_0$ flows in the primary.
- The current $I_0$ is called no-load current of the transformer.
- $I_0$ is made up of two components $I_m$ and $I_\omega$.
- The component $I_m$ is called the magnetizing component. It magnetize the core. $I_m$ is in phase with $\phi_m$.

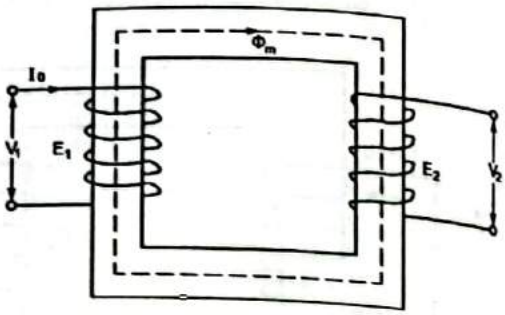


FIG. 3.17

- The current $I_m$ is also called reactive, or wattless component of no-load current.

$\therefore$ $\boxed{I_m = I_0 \sin \phi_0}$

- The component $I_\omega$ supplies the hysteresis and eddy-current losses in the core. The current $I_\omega$ is called the active component or wattful component of no-load current. It is in phase with the applied voltage $V_1$.

$\therefore$ $\boxed{I_\omega = I_0 \cos \phi_0}$

- $I_0$ is the vector sum of $I_\omega$ and $I_m$.

hence, $\boxed{I_0 = \sqrt{(I_m)^2 + (I_\omega)^2}}$

- Primary power factor at no load

$$\cos\phi_0 = \frac{I_\omega}{I_0}$$

- No load power supplied,

$$P_0 = V_1 I_0 \cos\phi_0 \text{ watts}$$

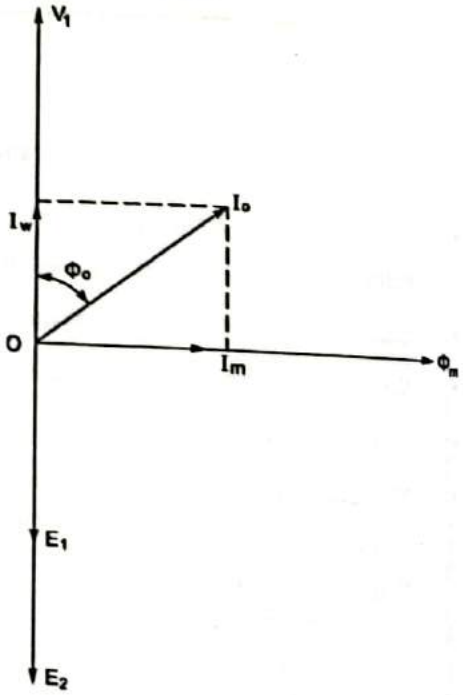


FIG. 3.18

## 3.26 TRANSFORMER ON LOAD :

- When secondary winding of the transformer is connected to the load, secondary current $I_2$ flows.
- The magnitude and phase of $I_2$ with respect to voltage $V_2$ are determined by the characteristics of the load. This current is in phase with the secondary voltage $V_2$, if the load is resistive. It lags if the load is inductive and, it leads if the load is capacitive.

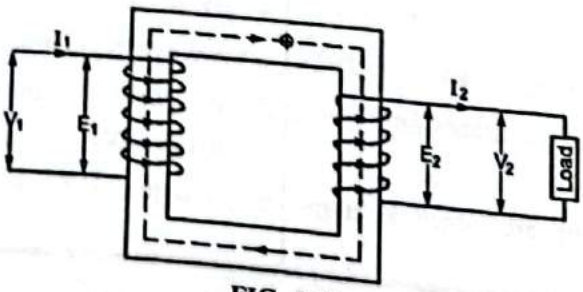


FIG. 3.19

Scanned with CamScanner

The operation of the transformer on load is as explained below :

(1) When the transformer is on no load, its primary draws a load current $I_0$ from the supply mains (see Fig. 3.20(a)). This no load current produces an m.m.f. $N_1I_0$ which sets up flux $\phi_0$ in the core.

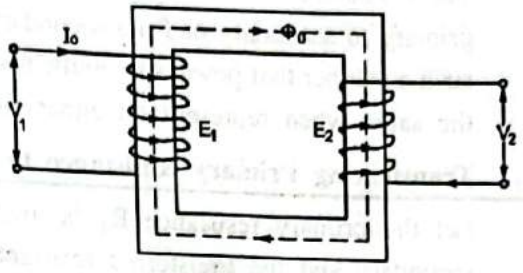


FIG. 3.20(a)

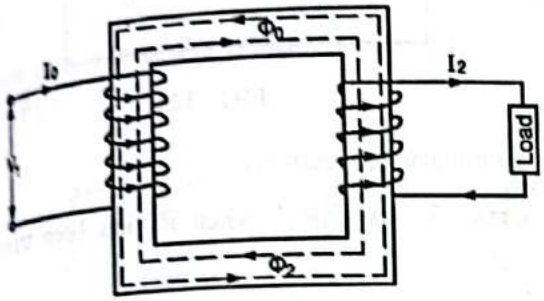


FIG. 3.20(b)

(2) When the transformer is loaded, a secondary current $I_2$ flows in the secondary winding as shown in Fig. 3.20(b). This secondary current produces an m.m.f. $N_2I_2$ which sets up flux $\phi_2$ in the core. The flux $\phi_2$ opposes the flux $\phi_0$ momentarily (Lenz's Law).

(3) Since $\phi_2$, opposes the flux $\phi_0$, therefore the resultant flux tends to decrease and causes the reduction of self induced e.m.f. $E_1$.

Let the additional current be $I_2'$. The amount of this additional current is such that the original conditions i.e., flux in the core must be restored to its original value $\phi_0$, so that $V_1 = E_1$. This additional current $I_2'$ is in anti-phase with $I_2$. The additional primary m.m.f. $N_1I_2'$ sets up its own flux $\phi_2'$ which is in opposition to $\phi_2$ and is equal to its magnitude. Hence $\phi_2$ and $\phi_2'$ cancel each other out, leaving the flux $\phi_0$ in the core only.

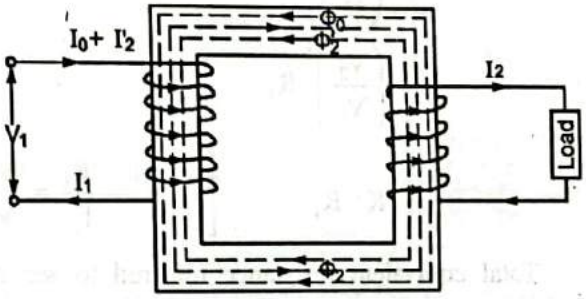


FIG. 3.20(c)

Now, $N_1 I_2' = N_2 \cdot I_2$

$$\therefore \quad I_2' = \frac{N_2}{N_1} \cdot I_2 = K \cdot I_2 \qquad \text{where, } K = \frac{N_2}{N_1} \text{ a constant}$$

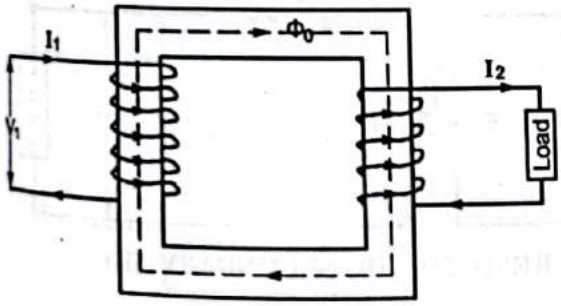


FIG. 3.20(d)

(4) Thus the flux is restored to its original value $\phi_0$ as shown in Fig. 3.20(d). Hence when the transformer is on load, the primary winding has two currents in it. One is $I_0$ and the other is $I_2'$, which is in antiphase with $I_2$ and K times in magnitude. The total primary current ($I_1$) is the vector sum of currents $I_0$ and $I_2'$.

## 3.27 EQUIVALENT RESISTANCES :

The primary winding resistance is represented by $R_1$, whereas secondary winding resistance is represented by $R_2$.

Due to this resistance, there is some power loss in the two windings. For simplicity of calculations and to understand, these resistances are shown externally.

Scanned with CamScanner

- The resistance is transferred to either side i.e. from primary to secondary or from secondary to primary in such a manner that power loss in the resistance remains the same when represent on either side.

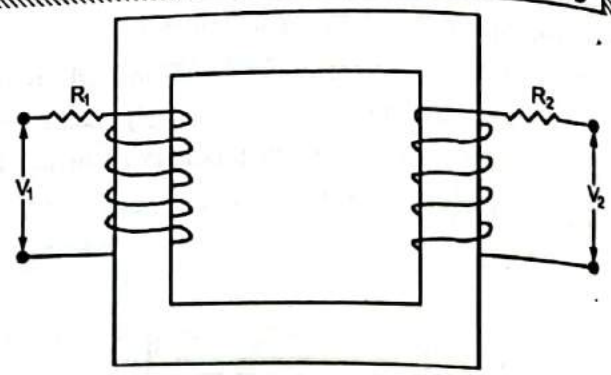


FIG. 3.21

**1. Transferring Primary Resistance to Secondary :**

- Let the primary resistance $R_1$ be transferred to the secondary and the transferred resistance is indicated by $R_1'$. This transferred resistance $R_1'$ is called equivalent resistance of primary as referred to the secondary as shown in Fig. 3.22.
- If $I_1$ and $I_2$ are the full load currents of primary and secondary respectively.
- The copper loss of primary is $I_1^2 R_1$. The copper loss across $R_1'$ is $I_2^2 R_1'$ when $R_1$ has been transfer to secondary.
- Comparing copper losses

$$I_1^2 R_1 = I_2^2 R_1'$$

$$\therefore \quad R_1' = \left(\frac{I_1}{I_2}\right)^2 \cdot R_1$$

$$= \left(\frac{V_2}{V_1}\right)^2 R_1$$

$$= K^2 R_1 \qquad \left[\because K = \frac{I_1}{I_2} = \frac{V_2}{V_1}\right]$$

- Total equivalent resistance referred to secondary i.e. $R_{02}$ is given as,

$$R_{02} = R_2 + R_1'$$

$$= \boxed{R_2 + K^2 R_1}$$

- Fig. 3.22 shows the diagram referring the primary resistance to secondary side.

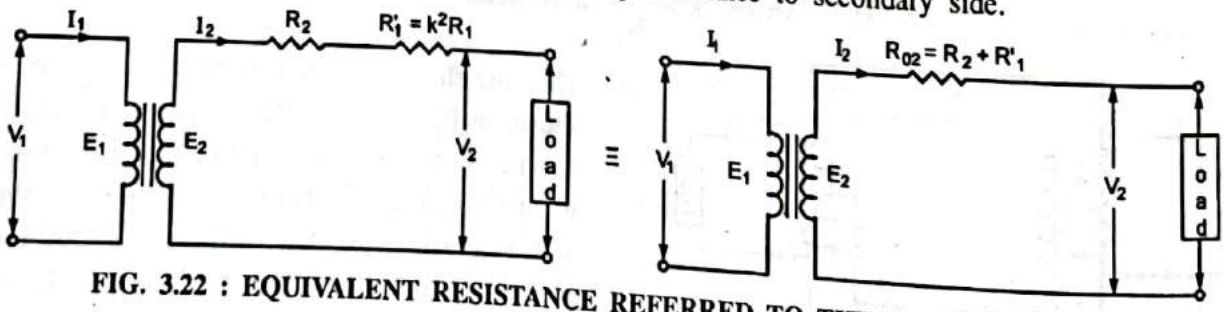


FIG. 3.22 : EQUIVALENT RESISTANCE REFERRED TO THE SECONDARY SIDE

**2. Transferring Secondary Resistance to Primary :**

- Let the secondary resistance $R_2$ be transferred to the primary and the transferred resistance is $R_2'$. This is called equivalent resistance of secondary as referred as referred to primary as shown in Fig. 3.23.
- If again $I_1$ and $I_2$ are the full load currents of primary and secondary respectively.
- Comparing copper losses.

$$I_1^2 R_2' = I_2^2 R_2$$

Scanned with CamScanner

$$\therefore R_2' = \left(\frac{I_2}{I_1}\right)^2 R_2$$

$$= \left(\frac{V_1}{V_2}\right)^2 R_2$$

$$= \boxed{\frac{R_2}{K^2}} \qquad \left[\because K = \frac{I_1}{I_2} = \frac{V_2}{V_1}\right]$$

Now resistance of the primary winding is $R_1$. So the total resistance of the primary winding is indicated by $R_{01}$.

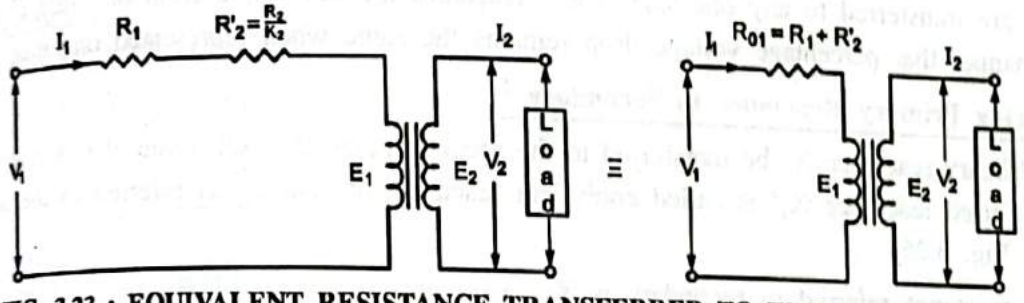


FIG. 3.23 : EQUIVALENT RESISTANCE TRANSFERRED TO THE PRIMARY SIDE

$$R_{01} = R_1 + R_2'$$

$$\boxed{R_{01} = R_1 + \frac{R_2}{K^2}}$$

Thus, $R_{01}$ is the resistance of the transformer referred to the primary side.

## EQUIVALENT LEAKAGE REACTANCE :

- It has been assumed so far, that when A.C. supply is given to the primary winding of the transformer, an alternating flux is set up in the core and this whole flux links both the windings of the transformer. But in actual practice it is not so. It is found that in an actual transformer, both the windings produce some flux which links only with the winding that produces leakage flux.
- The total flux produced can be divided into the following parts :

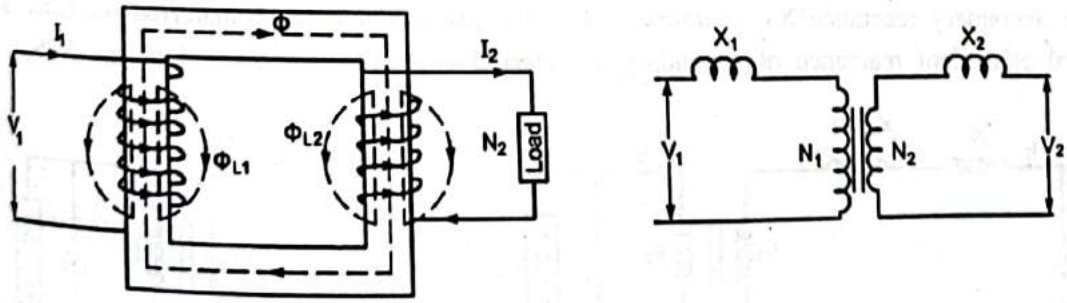


FIG. 3.24

(1) Flux $\phi$ = Flux links with both primary and secondary.
(2) Flux $\phi_{L_1}$ = Primary leakage flux
(3) Flux $\phi_{L_2}$ = Secondary leakage flux

- The total flux produced by the primary winding does not link with the secondary winding but some flux completes its path through air without passing through the core. This is called the primary leakage flux $\phi_{L1}$.

Scanned with CamScanner

- Due to this leakage flux emf is induced in the primary winding which opposes the primary voltage. To account for this effect, it is assumed that the primary winding has reactance and the voltage drop occurring in this reactance is equal to this emf. This leakage reactance is denoted by $X_{L1}$.
- Similarly, the total flux produced by the secondary winding does not link with the primary winding and some flux completes the path through air. This is the secondary leakage flux $\phi_{L2}$. Emf is induced in secondary winding due to this leakage flux emf is induced in the secondary winding which opposes the induced emf due to the main flux. This effect is indicated by the secondary leakage reactance $X_{L2}$. Fig. 3.24 shows the reactance of the primary and secondary windings.
- **Transferring of Reactances :** To make the calculations more easy, sometimes the reactances of the two windings are transferred to any one side. These reactance are transferred from one side to the other in such a manner that percentage voltage drop remains the same when represented on either side.

**1. Transferring Primary Reactance to Secondary :**

- Let the Primary reactance $X_1$ be transferred to the secondary and the new value of this reactance is $X_1'$. This transferred reactance $X_1'$ is called equivalent reactance of primary as referred to the secondary as shown in Fig. 3.25.
- The total reactence referred to secondary is $X_{02}$ given by

$$X_{02} = X_2 + X_1'$$

$$= \boxed{X_2 + K^2 X_1} \qquad [\because X_1' = K^2 X_1]$$

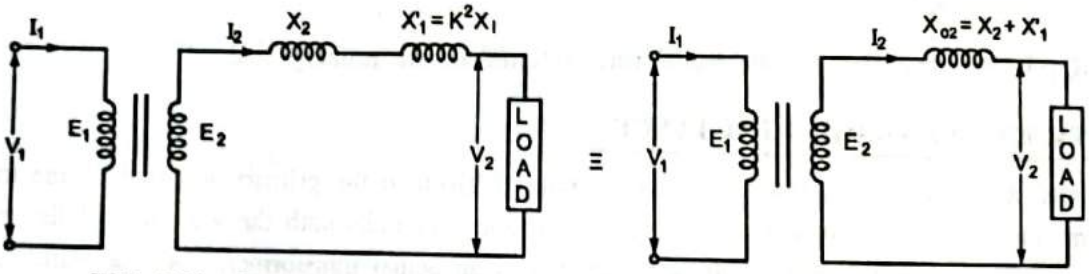


**FIG. 3.25 : TRANSFERRING PRIMARY REACTANCE TO SECONDARY**

**2. Transferring Secondary Reactance to Primary :**

- Let the Secondary reactance $X_2$ be transferred to the primary and the transferred reactance is $X_2'$. This is called equivalent reactance of secondary as referred to priamry as shown in Fig. 3.26.

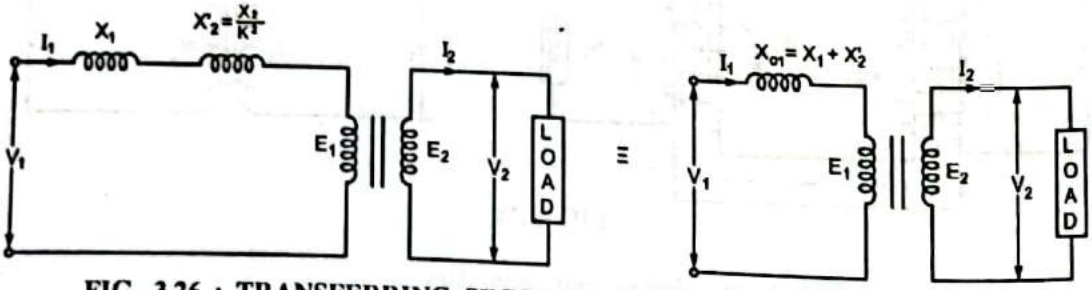


**FIG. 3.26 : TRANSFERRING SECONDARY REACTANCE TO PRIMARY**

- The total reactence referred to primary is $X_{01}$ is given by

$$X_{01} = X_1 + X_2'$$

$$= \boxed{X_1 + \frac{X_2}{K^2}}$$

Scanned with CamScanner

**Example-3.4 :**

**A 10 kVA, 2000/400 V single phase transformer has R1 = 5 Ω, $X_1$ = 12 Ω, $R_2$ = 0.2 Ω and $X_2$ = 0.48 Ω. Determine the equivalent impedance of the transformer referred to (1) primary (2) secondary side.**

***Solution :***

$$K = \frac{400}{2000} = 0.2$$

$$R_1 = 5\ \Omega$$

$$X_1 = 12\ \Omega$$

$$R_2 = 0.2\ \Omega$$

$$X_2 = 0.48\ \Omega$$

**(1) Primary side :**

$$R_{01} = R_1 + R_2'$$

$$= R_1 + \frac{R_2}{K^2}$$

$$= 5 + \frac{0.2}{(0.2)^2}$$

$$= \boxed{10\ \Omega}$$

$$X_{01} = X_1 + X_2'$$

$$= X_1 + \frac{X_2}{K^2}$$

$$= 12 + \frac{0.48}{(0.2)^2}$$

$$= \boxed{24\ \Omega}$$

$$Z_{01} = \sqrt{(R_{01})^2 + (X_{01})^2}$$

$$= \sqrt{(10)^2 + (24)^2}$$

$$= \boxed{15.62\ \Omega}$$

**(2) Secondary side :**

$$R_{02} = R_2 + R_1'$$

$$= R_2 + K^2 R_1$$

$$= 0.2 + (0.2)^2 \times 5$$

$$= \boxed{0.4\ \Omega}$$

$$X_{02} = X_2 + X_1'$$

$$= X_2 + K^2 \times X_1$$

$$= 0.48 + (0.2)^2 \times 12$$

$$= \boxed{0.96\ \Omega}$$

$$Z_{02} = \sqrt{(R_{02})^2 + (X_{02})^2}$$

$$= \sqrt{(0.4)^2 + (0.96)^2}$$

$$= \boxed{1.04\ \Omega}$$



Scanned with CamScanner

**Example-3.5 :**

**A 30 kVA, 2400/120 V, 50 Hz transformer has a high voltage winding resistance of 0.1 ohm and a leakage reactance of 0.22 ohm. The low voltage winding resistance is 0.035 ohm and leakage reactance is 0.012 ohm. Find the equivalent winding resistance, reactance and impedance referred to the (i) high voltage side (ii) low voltage side.**

***Solution :***

**Given :**

$$kVA = 30, \quad \frac{V_1}{V_2} = \frac{2400\ V}{120\ V}, \quad f = 50\ Hz$$

$$R_1 = 0.1\ \Omega, \quad X_1 = 0.22\ W \quad R_2 = 0.035\ \Omega$$

$$X_2 = 0.012\ \Omega$$

Voltage transformation ratio,

$$K = \frac{N_2}{N_1} = \frac{V_2}{V_1} = \frac{120}{2400} = 0.05 \quad \therefore \quad K = 0.05$$

**(1) Equivalent resistance and reactance referred to primary :**

Equivalent high voltage side resistance is given by,

$$R_{01} = R_1 + \frac{R_2}{K^2}$$

$$= 0.1 + \frac{0.035}{(0.05)^2}$$

$$\therefore \quad R_{01} = \boxed{14.1\ \Omega}$$

Equivalent high voltage side reactance is given by

$$X_{01} = X_1 + \frac{X_2}{K^2}$$

$$= 0.22 + \frac{0.12}{(0.05)^2}$$

$$X_{01} = \boxed{5.02\ \Omega}$$

**(2) Impedance as referred to the primary side :**

$$Z_{01} = \sqrt{(R_{01})^2 + (X_{01})^2}$$

$$= \sqrt{(14.1)^2 + (5.02)^2}$$

$$= \boxed{14.96\ \Omega}$$

**(3) Equivalent resistance and reactance as referred to the secondary side :**

$$R_{02} = R_2 + R_1 K^2$$

$$= 0.035 + (0.1) \times (0.05)^2$$

$$= \boxed{0.0353\ \Omega}$$

$$X_{02} = X_2 + X_1 K^2$$

$$= 0.012 + (0.22) \times (0.05)^2$$

$$= \boxed{0.0125\ \Omega}$$

Scanned with CamScanner

**(4) Impedance as referred to the secondary side :**

$$Z_{02} = \sqrt{(R_{02})^2 + (X_{02})^2}$$

$$= \sqrt{(0.0353)^2 + (0.0125)^2}$$

$$= \boxed{0.037\ \Omega}$$

**Exercise-3.1**

1. A single phase transformer has turns ratio of 4. Primary winding resistance and reactance are 5 ohm and 7.5 ohm respectively. While secondary winding resistance, reactance are 0.3 ohm and 0.8 irrespectively. Calculate equivalent resistance, reactance impedance referred to secondary and primary side impedance equivalent impedance.

[**Ans. :** $R_{02} = 0.61250\ \Omega$ $X_{02} = 1.269\ \Omega$
$Z_{02} = 1.41\ \Omega$ $Z_{01} = 22560\ \Omega$]

2. A 50 kVA 4400/220 V transformer has $R_1 = 3.450$, $R_2 = 0.009\ \Omega$. The values of reactance are $X_1 = 5.2\ \Omega$ and $X_2 = 0.015\ \Omega$. Calculate for the transformer :
   (1) equivalent resistance as referred to primary.
   (2) equivalent reactance as referred to primary.
   (3) equivalent resistance and reactance referred to secondary.
   (4) equivalent impedances as referred to both primary and secondary.

[**Ans. :** $R_{01} = 7.05\ \Omega$ $R_{02} = 0.01760\ \Omega$
$X_{01} = 11.2\ \Omega$ $X_{02} = 0.028\ \Omega$
$Z_{01} = 13.23\ \Omega$ $Z_{02} = 0.03311\ \Omega$]

## 3.29 AN ACTUAL TRANSFORMER :

- An actual transformer is one which has both core loss as well as copper losses. It has primary and secondary winding resistances as $R_1$ and $R_2$ and leakage reactances $X_1$ and $X_2$, in which,
- The primary impedance is given by,

$$Z_1 = \sqrt{R_1^2 + X_1^2}$$

$$= (R_1 + jX_1)\ \Omega$$

- Similarly, secondary impedance is given by,

$$Z_2 = \sqrt{R_2^2 + X_2^2}$$

$$= (R_2 + jX_2)\ \Omega$$

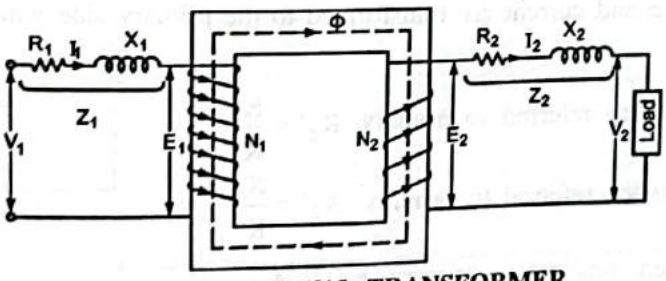


**FIG. 3.27 : ACTUAL TRANSFORMER**

Scanned with CamScanner

- The resistance and leakage reactance of each winding causes some voltage drop in each winding.

$\therefore$ $$V_1 = E_1 + I_1 (R_1 + jX_1)$$

or $$\boxed{V_1 = E_1 + I_1 Z_1}$$

- Similarly, there are $I_2 R_2$ and $I_2 X_2$ drops in secondary, which combine with $V_2$ to give,

$$E_2 = V_2 - I_2 (R_2 + jX_2)$$

or $$V_2 = E_2 - I_2 (R_2 + jX_2)$$

$$\boxed{V_2 = E_2 - I_2 Z_2}$$

## 3.30 EQUIVALENT CIRCUIT OF TRANSFORMER :

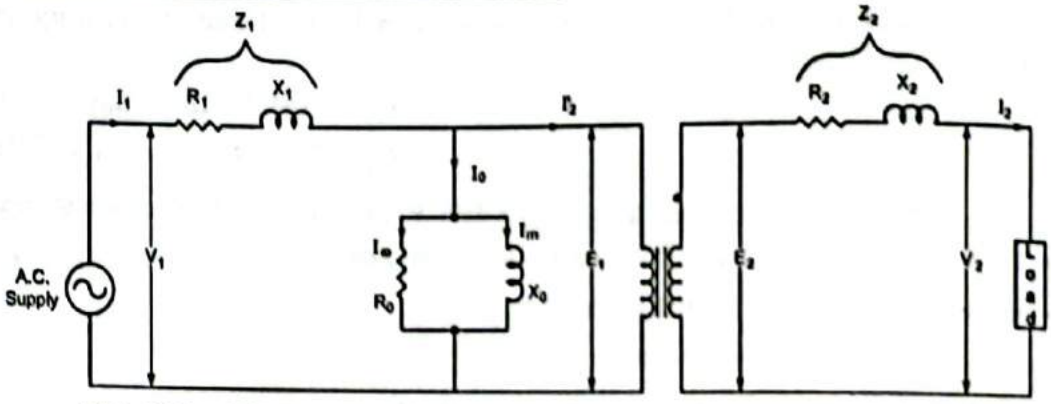


FIG. 3.28 : COMPLETE EQUIVALENT CIRCUIT OF A TRANSFORMER

- Equivalent circuit is used to make analysis of the transformer
- Fig. 3.28 shows the complete equivalent circuit of a transformer.
- The current $I_0$ is called the no-load current of the transformer. It is made up of two components $I_m$ and $I_\omega$.

  $I_m$ – magnetizing component

  $I_\omega$ – active component

### Simplified Equivalent Circuit :

- The equivalent circuit is simplified, if the no load current $I_0$ is neglected as its value is very small as compared to full load current. The simplified equivalent circuit is as shown below.

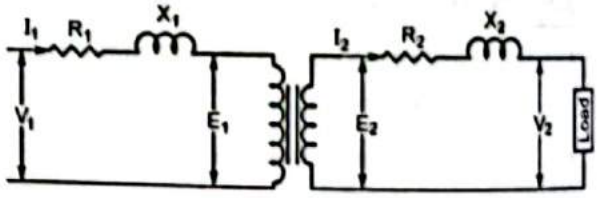


FIG. 3.29

- To make the calculations simple, all the parameters are transferred to one side either on the secondary or on the primary.

### Approximate Equivalent Circuit :

- To make transformer calculation simpler, it is preferable to transfer voltage, current and impedance either to the primary or to the secondary.
- The secondary voltage and current are transformed to the primary side with the following values referred to the primary.

(1) Secondary resistance referred to primary $R_2' = \dfrac{R_2}{K^2}$

(2) Secondary reactance referred to primary $X_2' = \dfrac{X_2}{K^2}$

(3) Secondary current referred to primary $I_2' = \dfrac{I_2}{K^2}$

Scanned with CamScanner

- Fig. 3.30 shows the equivalent circuit with all secondary values referred to the primary.
- This circuit is called the exact equivalent circuit of the transformer referred to the primary.
- With this model, it is not possible to add directly the primary impedance $Z_1 = (R_1 + jX_1)$ to the secondary impedance $Z_2' = (R_2' + jX_2')$ reflected to the primary side.

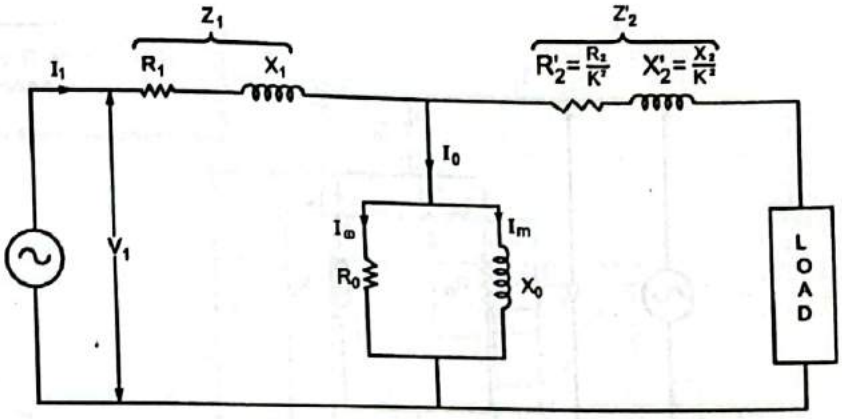


FIG. 3.30

- Therefore the parallel branch $R_0 \,||\, X_0$ is shift to the input terminal side as shown in Fig. 3.31.

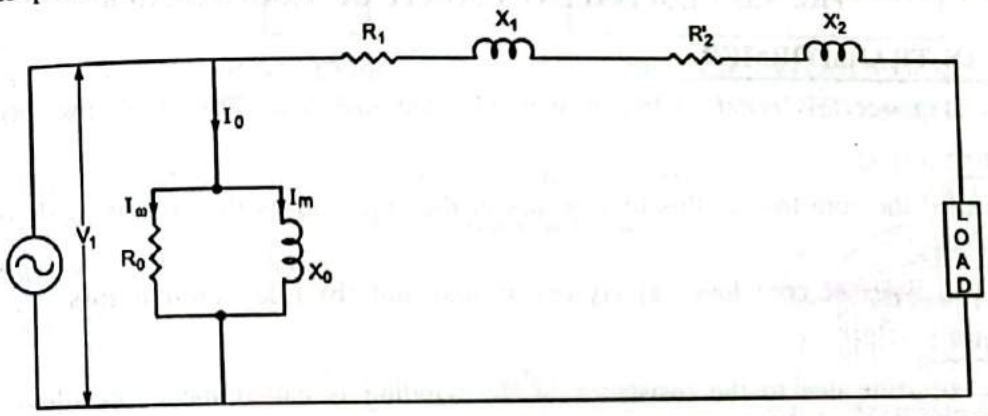


FIG. 3.31 : APPROXIMATE EQUIVALENT CIRCUIT OF THE TRANSFORMER

- Fig. 3.31 shows the approximate equivalent circuit of transformer
- The following results are obtained from the approximate equivalent circuit.

$$R_{01} = R_1 + R_2' = R_1 + \frac{R_2}{K^2}$$

$$X_{01} = X_2 + X_2' = X_1 + \frac{X_2}{K^2}$$

$$Z_{01} = R_{01} + jX_{01}$$

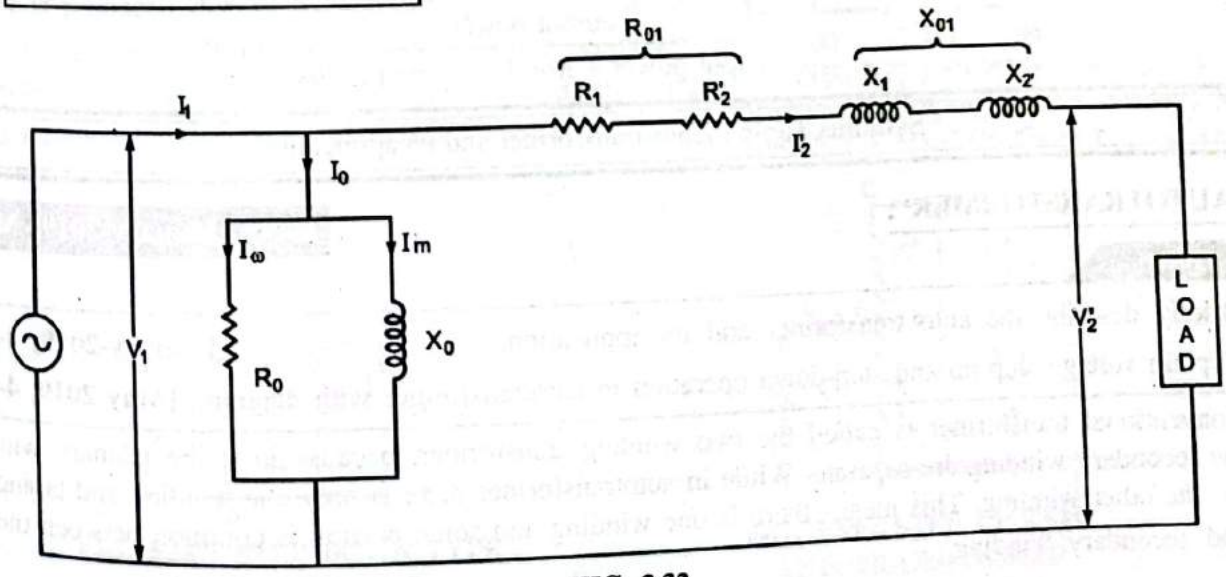


FIG. 3.32

Scanned with CamScanner

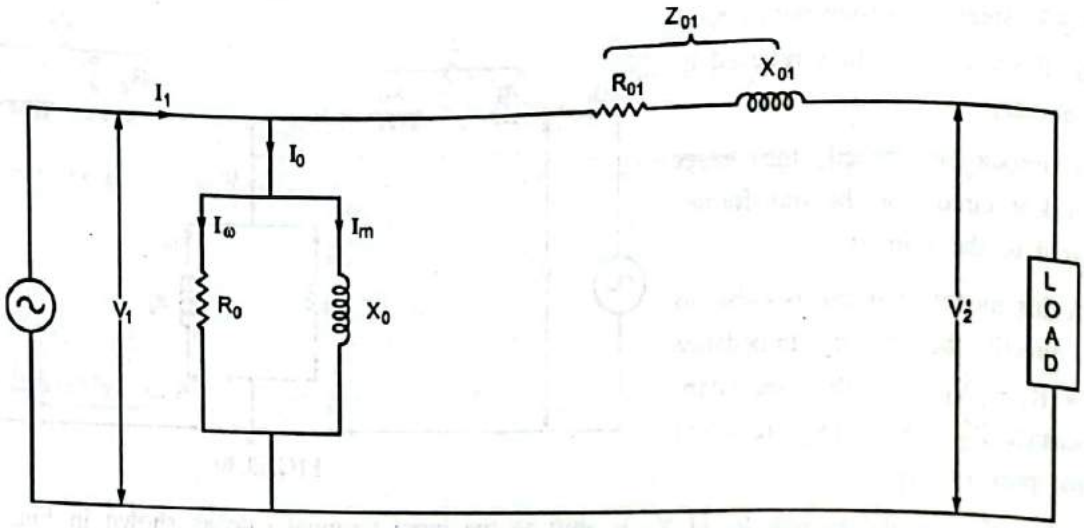


FIG. 3.33 : EQUIVALENT CIRCUIT OF TRANSFORMER

## 3.31 LOSSES IN TRANSFORMER :

- Two types of power loss occur in transformer. (1) iron loss and (2) Copper loss.

### 1. Iron Loss :

- It is also called the core loss as this loss occurs in the core and as the core is made of iron, it is called iron loss also.
- There are two types of core loss. (a) Hysteresis loss and (b) Eddy current loss.

### 2. Copper Loss :

- Power loss occurring due to the resistance of the winding is called the copper loss.
- There are two Windings in transformer. (1) Primary winding and (2) Secondary winding. So power loss occurs in both the windings.

## 3.32 EFFICIENCY OF TRANSFORMER :

- Power loss occurs in transformer so the transformer does not give out whole the power fed to it. To account for this the term efficiency is arranged.

% Efficiency

$$\eta = \frac{\text{output power}}{\text{input power}} \times 100$$

$$= \frac{\text{output power}}{\text{output + losses}} \times 100$$

$$= \frac{\text{output power}}{\text{output power + iron loss + copper loss}} \times 100$$

**Syllabus Topic : Auto-transformer and its application**

## 3.33 AUTOTRANSFORMER :

**GTU Questions** **GTU, January-2019; May-2019**

1. Briefly describe the auto transformer and its applications. **[January-2019, 4-Marks]**
2. Explain voltage step-up and step-down operation in autotransformer with diagram. **[May-2019, 4-Marks]**

- Conventional transformer is called the two winding transformer, because in it the primary winding and the secondary winding are separate. While in autotransformer there is only one winding and taping is taken for the other winding. This means there is one winding and some portion is common between the primary and secondary winding.

Scanned with CamScanner

- Autotransformers are of two types :

(1) Fixed taping type (Step up or step down type)
(2) Continuously variable type.

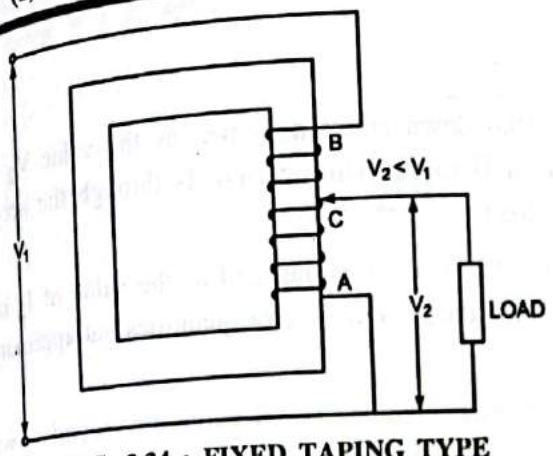


FIG. 3.34 : FIXED TAPING TYPE STEP DOWN AUTOTRANSFORMER

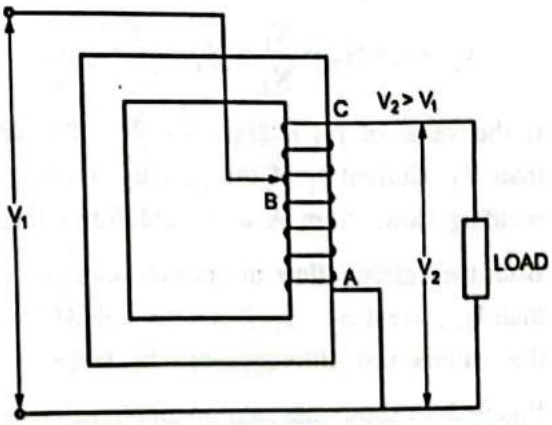


FIG. 3.35 : FIXED TAPING TYPE STEP UP AUTOTRANSFORMER

- Core of the fixed taping type autotransformer is rectangular and is shell type or core type while the core of the continuously variable autotransformer is toroidal in shape.
- Connection is taken through the brush.
- Figure 3.34 & 3.35 shows the symbol of auto-transformer.

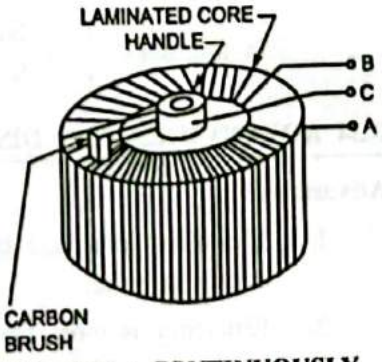


FIG. 3.36 : CONTINUOUSLY VARIABLE AUTOTRANSFORMER

**Working :**

- In figure 3.37. AB is the primary winding in which there are $N_1$ turns while AC is secondary winding in which there are $N_2$ turns.
- Flux is produced due to the current $I_1$ flowing through the primary winding, which is linked by the secondary winding turns AC. So emf $E_2$ is induced in portion AC and terminal voltage $V_2$ is available.

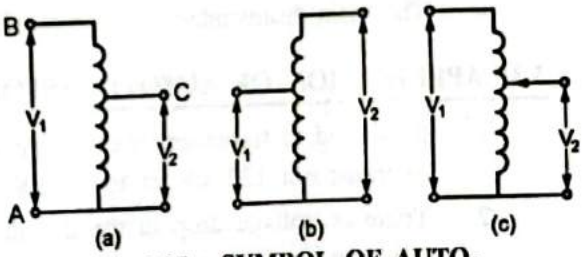


FIG. 3.37 : SYMBOL OF AUTO-TRANSFORMER (a) FIXED TAPING STEP DOWN (b) CONTINUOUSLY VARIABLE

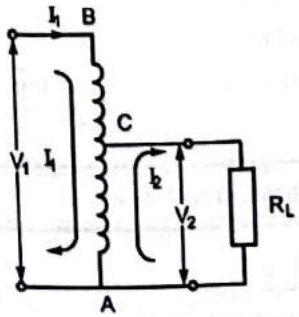


FIG. 3.38 : STEP DOWN TYPE AUTOTRANSFORMER

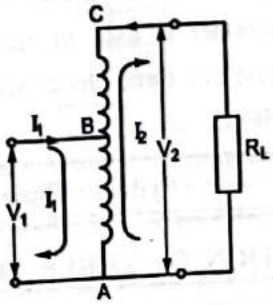


FIG. 3.39 : STEP UP TYPE AUTOTRANSFORMER

Scanned with CamScanner

- There are $N_1$ turns in winding AB and it is given $V_1$ volts so emf per turn becomes $E_t = \frac{V_1}{N_1}$. Now this value of $E_t$ is same for both the windings. So if there are $N_2$ turns in secondary winding, the secondary voltage will become

$$V_2 = E \times N_2 = \frac{V_1}{N_1} \times N_2$$

- If the value of $N_2$ is less than $N_1$, it is called the step down autotransformer, as the value $V_2$ is less than $V_1$. Current $I_1$ of the primary winding flows from B to A. While current $I_2$ through the secondary winding flows from A to C and flows through the load.
- Both the currents flow in opposite directions in portion AC of the winding and as the value of $I_2$ is more than $I_1$, current $(I_2 - I_1)$ flows through AC from A to C the currents are vector quantities but approximately, the arithmetical difference can be taken.
- Figure 3.39 shows the step up autotransformer. In this primary winding is AB while the secondary winding is AC. There are $N_2$ turns in secondary winding and value of $N_2$ is more than $N_1$ so voltage $N_1$ is more than $V_1$.

In this also, $\frac{V_1}{V_2} = \frac{N_1}{N_2} = \frac{I_2}{I_1}$

## 3.34 ADVANTAGES AND DISADVANTAGES OF AUTOTRANSFORMER :

**Advantages :**

1. The main advantage of autotransformer is the saving in copper. If the voltage ratio is near 1 the saving is more.
2. Efficiency is more than the two winding transformer.
3. Size is less than the two winding transformer.

**Disadvantage :**

- The main disadvantage of autotransformer is that there is no isolation between the supply and the load.

## 3.35 APPLICATION OF AUTOTRANSFORMER :

1. It is used to transform the voltage in the medium voltage transmission line. For example it is used to transform 132 kV in to 66 kV.
2. There is voltage drop in the distribution cable. Step up type autotransformer is used to compensate this voltage drop.
3. It is used in autotransformer type starter in induction motor.
4. It is used in electric furnace to obtain the required voltage.
5. Autotransformer is used in electric locomotive for the control.
6. Single-phase and three-phase type variacs are used in electrical laboratory to obtain the required voltage while testing.

**Syllabus Topic : Construction of Three Phase Transformer**

## 3.36 CONSTRUCTION OF THREE PHASE TRANSFORMER :

- The 3-$\phi$ core type transformer may be consider to be three single phase transformers tapped together, as shown in Fig. 3.40(a).

Scanned with CamScanner

- When primary windings are connected to 3–ϕ supply, the three fluxes $\phi_R$, $\phi_Y$ and $\phi_B$ produce in the core.

[∵ Assume Magnitude = 1 Wb]

$\phi_R = 1 \angle 0°$

$\phi_Y = 1 \angle 120°$

$\phi_B = 1 \angle 240°$

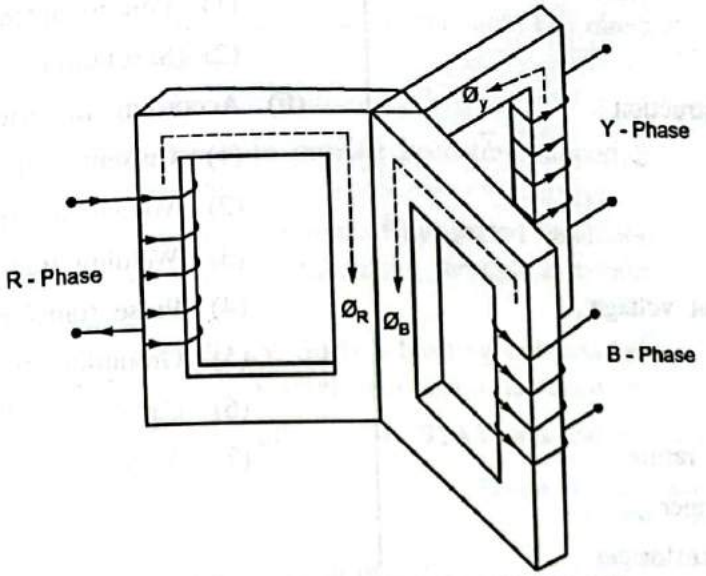


**FIG. 3.40(a) : 3-PHASE TRANSFORMER**

- The resultant flux in the core is

$$\phi_R + \phi_Y + \phi_B = (1 \angle 0°) + (1 \angle 120°) + (1 \angle 240°)$$
$$= 1 (\cos 0 + j \sin 0) + 1 (\cos 120° + j \sin 120°) + 1 (\cos 240° + j \sin 240°)$$
$$= 1 - 0.5 + j\, 0.866 - 0.5 - j\, 0.866$$
$$= 1 - 1$$
$$= \boxed{0 \text{ weber (at the junction)}}$$

- So that the resultant flux in the core is zero at the junction and no flux in the central core and it might be removed.
- Resultant core construction would be

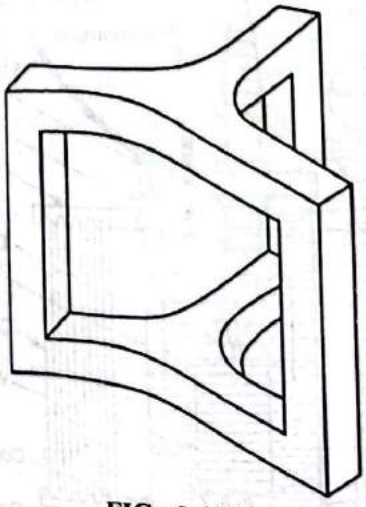

**FIG. 3.40(b)**

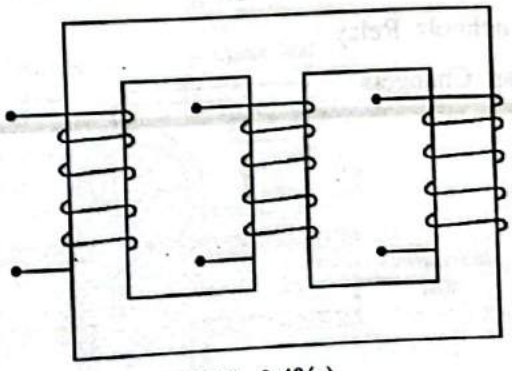

**FIG. 3.40(c)**

- This type of core is not generally used because it is difficult to construct and cost is very high.
- The Fig. 3.40(c) shows the formation of 3–ϕ transformer. It is also called core-type 3–ϕ transformer.

Scanned with CamScanner

## 3.37 TYPES OF TRANSFORMERS :

- The classification of the transformers are given below :

(A) According to supply
  (1) Single phase
  (2) Three phase

(B) According to construction
  (1) Shell type
  (2) Core type
  (3) Berry type

(C) According to output voltage
  (1) Step-up
  (2) Step-down

(D) According to KVA rating
  (1) Power transformer
  (2) Distribution transformer

(E) According to mounting
  (1) Pole-mounted
  (2) Substation

(F) According to different applications
  (1) Current transformer (CT)
  (2) Voltage transformer (PT)
  (3) Welding transformer
  (4) Pulse transformer
  (5) Grounding transformer
  (6) Capacitor Voltage transformer
  (7) Audio frequency transformer

## 3.38 CONSTRUCTION OF THREE PHASE TRANSFORMER :

- A three phase transformer has three primary windings and three secondary windings wound on a common magnetic core.
- The core and the windings are enclosed in a tank filled with dielectric oil.
- The terminals of the primary and secondary windings are connected to the internal end of the bushings.
- The bushings provide the necessary insulation to the conductor.
- The bushings are supported on the tank cover.

### 3.38.1 Accessories of Transformers :

- The various accessories used in the transformer are :

1. Conservator Tank
2. High Voltage and Low Voltage Bushings
3. Breather
4. Buchholz Relay
5. Tap Changers

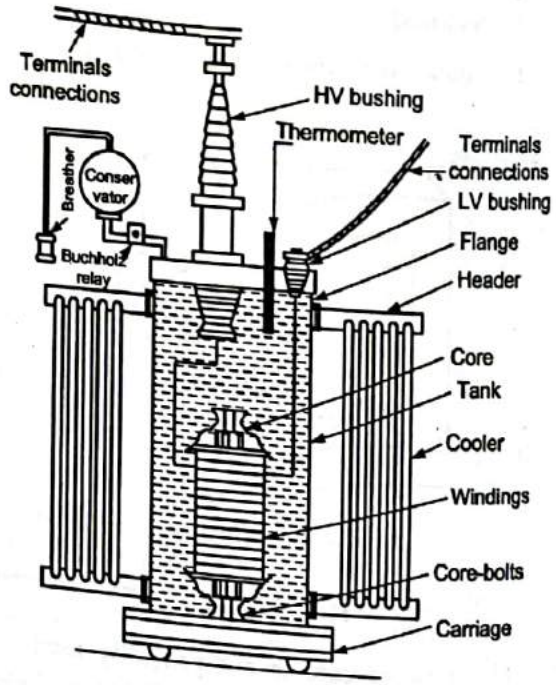


FIG. 3.41 : PARTS OF DISTRIBUTION TRANSFORMER

Scanned with CamScanner

**1. Conservator Tank :**

- It is a large size cylindrical tank which is connected by pipe to the transformer. The conservator tank is filled with transformer oil up to a certain level. The remaining portion of the tank is filled with air. Conservator oil is in communication with tank oil. Expansion and contraction of transformer tank oil is accommodated by the air cushion in the conservator. The direct contact external air with oil is avoided.

**2. High Voltage Bushings :**

- The function of high voltage bushings is to provide insulating support to a conductor passing through earthen tank.
- Bushing comprises of a central conductor surrounded by graded insulation. A bushing is necessary when a conductor is taken out through a metallic tank, at earth potential.
- Porcelain bushing can be used up to 20 kV. Such a bushing consists of a single porcelain bushing, through which a single conductor is taken out.
- Oil filled bushing is used for 33 kV applications. For 132 kV and above, oil impregnated paper condensor bushings are used.

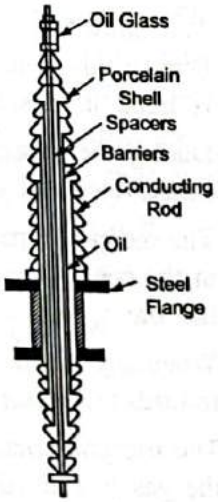


FIG. 3.42 : BUSHING ASSEMBLY

**3. Breather :**

- The breather is filled with silica jel. The function of silica jel is to absorb moisture. It is fitted between the air space of conservator and the outside vent. The breathing of transformers during load takes place through breather. When the load increases, the oil expands and the air from conservator is expelled.
- During reduce load cycle, the oil in the conservator falls down and the atmospheric air is breathed in. This incoming air is taken through the silica-jel.
- Dry silica jel is of pale pink colour. It turns blue when it absorbs moisture. The wet silica jel can be re-used after drying.

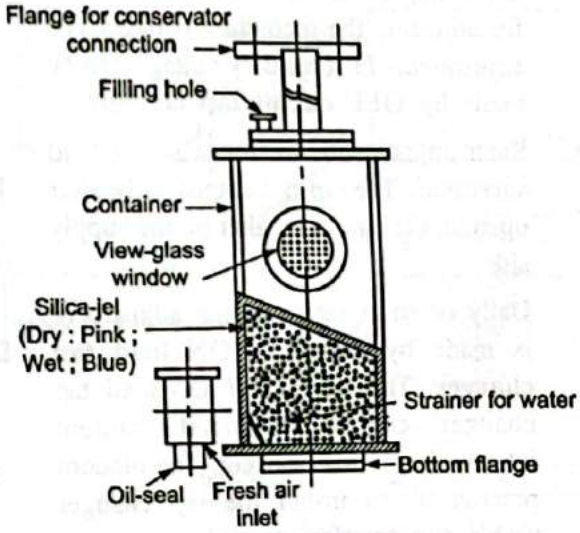


FIG. 3.43 : BREATHER

**4. Buchholz Relay :**

- These relays are used for the protection of oil immersed transformers against all kinds of internal faults having rating more than 750 kVA.
- It is a gas operated relay which is installed in the pipe connecting the conservator with the main tank.

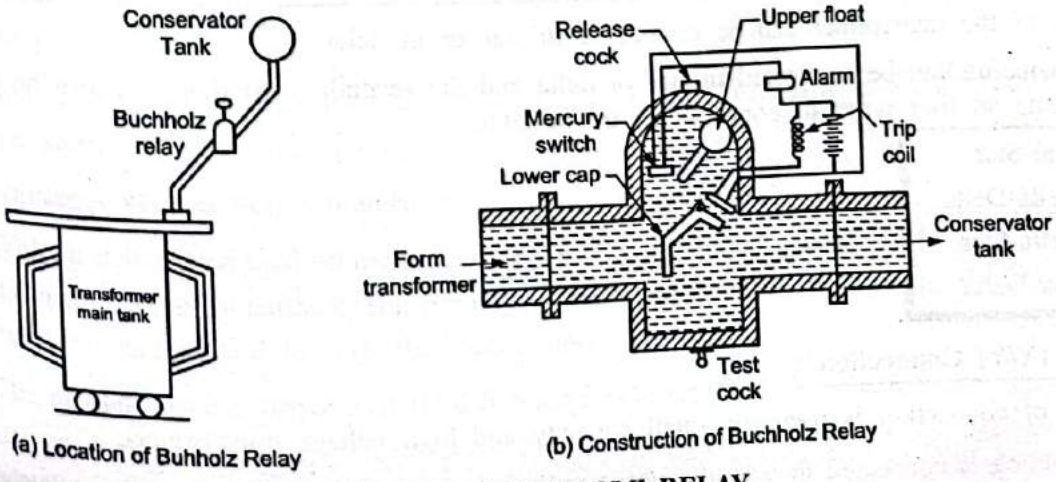


(a) Location of Buhholz Relay

(b) Construction of Buchholz Relay

FIG. 3.44 : BUCHHOLZ RELAY

Scanned with CamScanner

- Whenever any minor fault occurs, current leaks and heat is produced.
- Due to this heat, some oil evaporates in the transformer tank (about 70% hydrogen). Since hydrogen gas is light, it tries to go into the conservator tank via relay.
- During the process, some gas and oil vapours are collected in the top chamber while passing to the conservator and the oil level in the tank falls.
- The mercury type switch attached to the float is tilted, thereby closing the alarm circuit and the bell rings in the control room. This gives a warning to the attendant, that some serious fault is going to occur inside the transformer.
- When any severe fault takes place, larger volume of gas is generated in the main tank. These gases rush towards the conservator in a **Buchhloz Relay** resulting the tilting of mercury switch fitted on hinged type gap.
- The trip coil contacts of the circuit breaker are closed. The pressure in the chamber can be released and the gas is emitted to refill with oil. A test cock is installed at the bottom of the chamber to allow air to be pumped into the chamber for test purpose.

**5. Tap Changers :**

- Tap changer is fitted with the transformer for adjusting the secondary voltage. The adjustments in secondary voltage can be made by **OFF circuit tap changer.**
- Such adjustments are for seasonal load variations. The tap is changed only after opening the circuit breaker on the supply side.
- Daily or short time voltage adjustment is made by means of **ON load tap changer.** The tapping of ON-load tap changer can be changed without interruption in load current. The modern practice is to install the tap changer within the transformer tank.

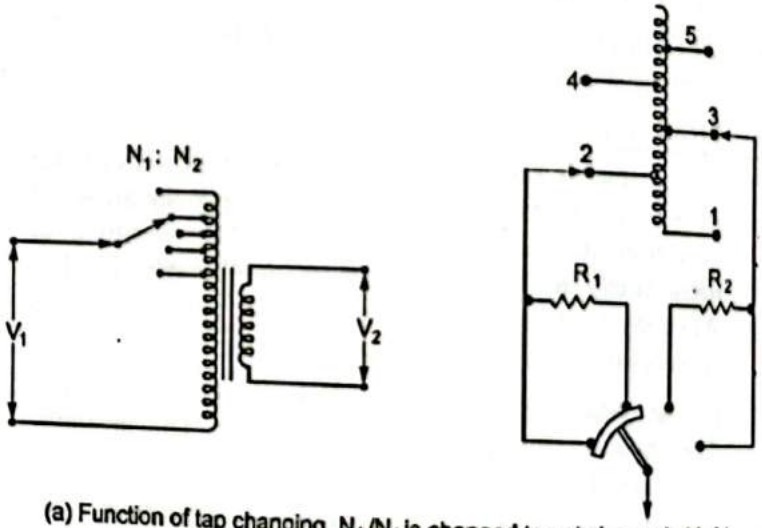


(a) Function of tap changing. $N_1/N_2$ is changed to get change in $V_1/V_2$
(b) On load tap changer

**FIG. 3.45 : TAP CHANGERS**

## 3.39 CONNECTIONS OF THREE-PHASE TRANSFORMERS :

**GTU Questions** **GTU, May-2019; Dec. 2020**

**1.** Explain various connections of three phase transformer with diagram. **[May-2019, Dec. 2020, 7-Marks]**

- Windings of the transformer can be connected in star or in delta.
- Primary winding can be connected in star or delta and the secondary winding can also be connected in star or delta so four types of connections are possible.

1. Star-Star
2. Delta-Delta
3. Delta-Star
4. Star-Delta

**1. Star-Star (Y/Y) Connection :**

- This type of connection is used for small capacity and high voltage transformers.
- As the winding is connected in star, the phase voltage becomes $V_L/\sqrt{3}$, so small insulation is needed.

Scanned with CamScanner

- Phase of the primary winding of transformer are shown by capital letters (A, B, C), while the phases of the secondary winding are shown by the small letters (a, b, c).
- In this connection the primary phase voltage is,

$$V_{ph_1} = \frac{V_{L_1}}{\sqrt{3}}$$

- The secondary phase voltage is,

$$V_{ph_2} = \frac{V_{L_2}}{\sqrt{3}}$$

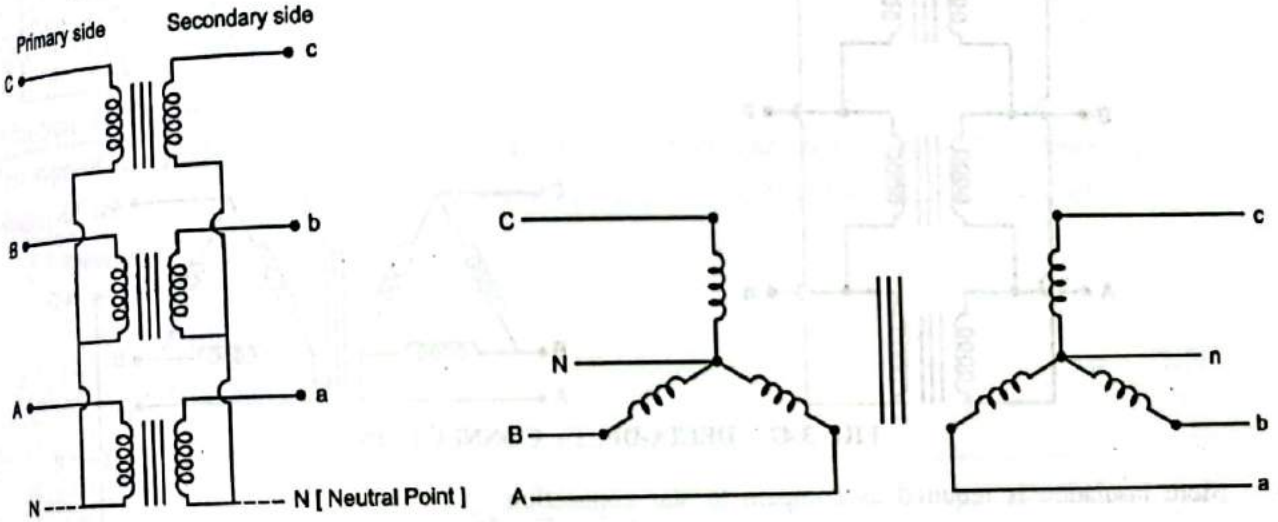


**FIG. 3.46 : STAR-STAR CONNECTION**

- The voltage ratio of this connection is,

$$a = \frac{V_{L_1}}{V_{L_2}} = \frac{\sqrt{3}\ V_{ph_1}}{\sqrt{3}\ V_{ph_2}} = \frac{V_{ph_1}}{V_{ph_2}}$$

- **Advantages of Star-Star Connection :**

(1) In this case, $V_L = \sqrt{3}\ V_{ph}$, thus line is being higher, and therefore lesser number of turns are required which means that the cost is comparatively lower.

(2) Phase voltage being lower than the line voltage, with comparatively less dielectric stress, higher voltages are possible.

(3) Both the primary and the secondary, being star connected, there is no phase shift between the primary and secondary voltages.

- **Disadvantages of Star-Star Connection :**

(1) With an unbalanced load on the secondary winding, the phase voltage on the load side changes unless the neutral point is earthed. The primary currents are therefore limited and there is a large shift of the secondary neutral towards the loaded line.

(2) The neutral unstable because of third harmonic component in the exciting currents, and also perhaps due to unequal magnetizing currents for the three units. Third harmonic voltages exist between each line and the junction point.

Scanned with CamScanner

## 2. Delta-Delta (Δ/Δ) Connection :

- This type of connection is used for large capacity and low voltage.
- As the phase current = $\sqrt{3}$ line current.
- Less amount of copper is required for the winding.
- More over if there is fault in one phase, the transformer continues to work as open delta connection with 58% capacity.

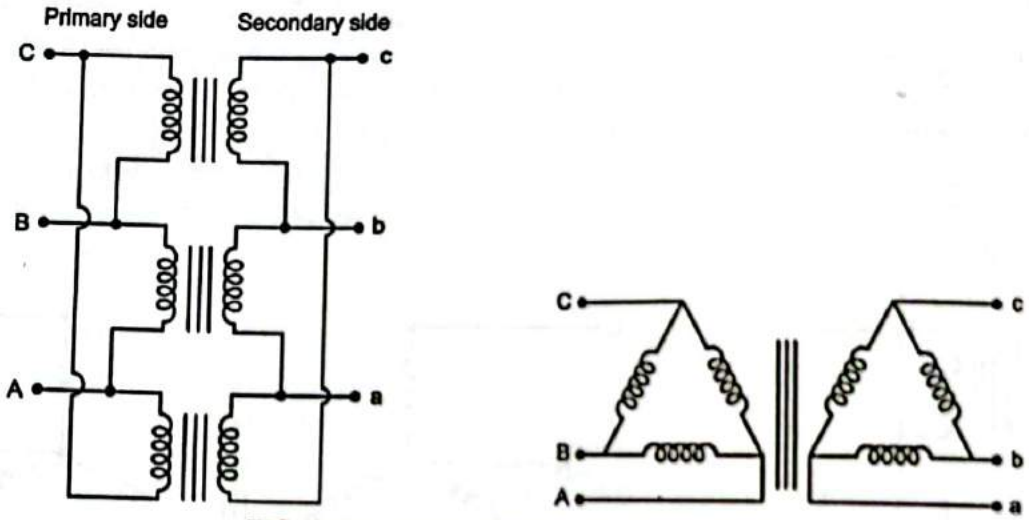


FIG. 3.47 : DELTA-DELTA CONNECTION

- More insulation is required as compare to star connection.
- In delta-delta connection

$$\boxed{\begin{aligned} V_{L_1} &= V_{ph_1} \\ V_{L_2} &= V_{ph_2} \end{aligned}}$$

- Line to line voltage ratio of this connection is,

$$\boxed{a = \frac{V_{L_1}}{V_{L_2}} = \frac{V_{ph_1}}{V_{ph_2}}}$$

## 3. Star-Delta (Y/Δ) Connection :

- This type of connection is used for distribution network.
- The primary supply may be either three wire or four wire, but the secondary output is 3-wire.

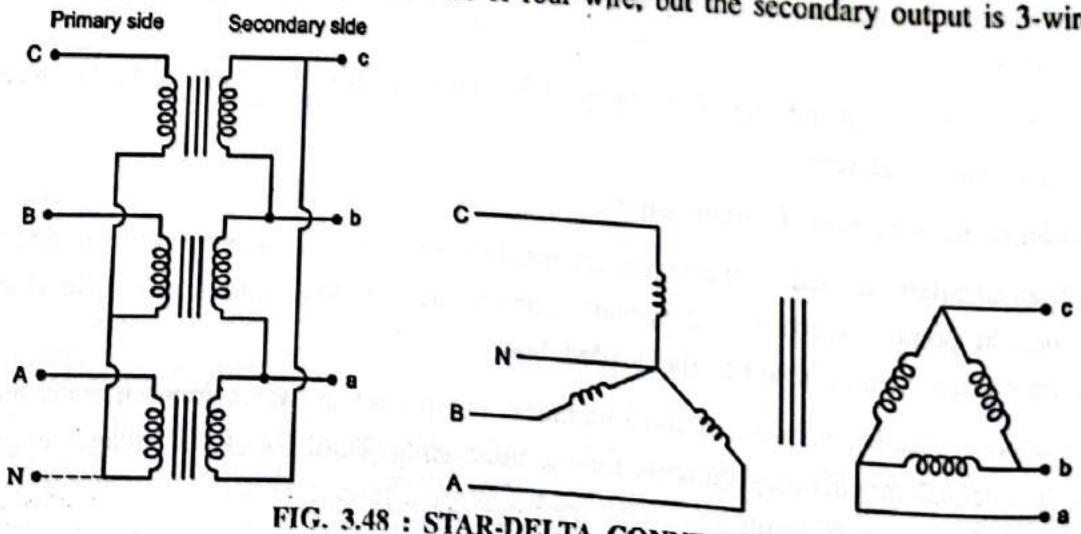


FIG. 3.48 : STAR-DELTA CONNECTION

Scanned with CamScanner

- It should note that with the Y-Δ connection, the voltage transformation ratio of the bank is $\sqrt{3}$ times the voltage transformation ratio of the individual transformers.
- 30° phase shift between primary and secondary line voltages.
- In this connection, the primary line voltage is,

$$V_{L_1} = \sqrt{3}\, V_{ph1} \qquad [\because \text{ Star connection}]$$

- The secondary line voltage is

$$V_{L_2} = V_{ph2} \qquad [\because \text{ Delta connection}]$$

- The line voltage ratio becomes,

$$a = \frac{V_{L_1}}{V_{L_2}} = \frac{\sqrt{3}\, V_{ph_1}}{V_{ph_2}}$$

**4. Delta-Star (Δ/Y) Connection :**

- This type of connection is used at the beginning of the transmission (to step-up the voltage)
- Neutral of the secondary is provide 3–ϕ, 4-wire system. It is useful for 1–ϕ and 3–ϕ load.

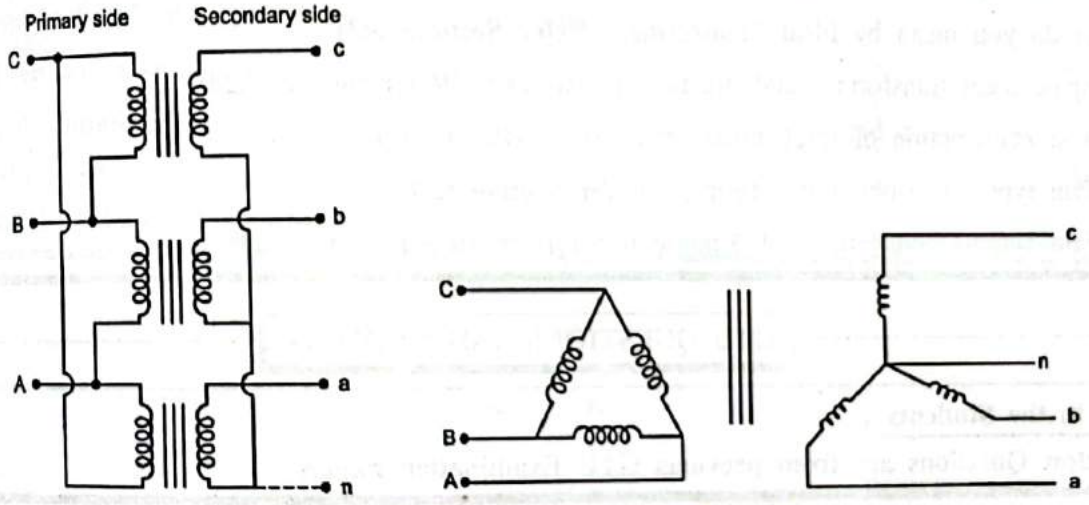


**FIG. 3.49 : DELTA-STAR CONNECTION**

- In this connection, the primary side line voltage is,

$$V_{L_1} = V_{ph1} \qquad [\because \text{ Delta connection}]$$

- Secondary side line voltage is,

$$V_{L_2} = \sqrt{3}\, V_{ph2} \qquad [\because \text{ Star connection}]$$

- The line-to-line voltage ratio of this connection is,

$$a = \frac{V_{L_1}}{V_{L_2}} = \frac{V_{ph_1}}{\sqrt{3}\, V_{ph_2}}$$

**Exercise**

1. Explain following terms :
   (1) Magnetic Field **(Refer Section-3.2)**
   (2) Flux **(Refer Section-3.3)**
   (3) Magnetic flux density **(Refer Section-3.5)**
   (4) MMF **(Refer Section-3.6)**

Scanned with CamScanner

(5) Magnetic Field Intensity **(Refer Section-3.7)**

(6) Reluctance **(Refer Section-3.9)**

2. Explain various types of magnetic materials. **(Refer Section-3.11)**
3. Draw B-H curve of a magnetic material. Define all the terms relevant to this curve. **(Refer Section-3.12)**
4. State and explain Faraday's Law of Electromagnetic Induction. **(Refer Section-3.14)**
5. Explain the working principle of transformer. **(Refer Section-3.18)**
6. Explain construction of single phase transformer. **(Refer Section-3.19)**
7. Explain the difference between the core type and shell type transformer. **(Refer Section-3.20)**
8. Explain the equivalent resistance and reactance in transformer. **(Refer Section-3.27 & 3.28)**
9. Explain the equivalent circuit of transformer. **(Refer Section-3.30)**
10. Explain the losses occurring in transformer. **(Refer Section-3.31)**
11. State the advantages of autotransformer. **(Refer Section-3.34)**
12. State the application of autotransformer. **(Refer Section-3.35)**
13. What do you mean by Ideal Transformer. **(Refer Section-3.23)**
14. Compare ideal transformer and practical transformer. **(Refer Section-3.24)**
15. Explain construction of three phase transformer. **(Refer Section-3.36)**
16. Explain types of 3-phase transformer. **(Refer Section-3.37)**
17. Explain various connections of 3-phase transformer. **(Refer Section-3.39)**

## GTU QUESTIONS AND ANSWERS

**Note to the Students :**

- **Below Questions are from previous GTU Examination Papers**

### January-2019

**1.** Briefly describe the operating principle of a transformer. **4-Marks**

**Ans. : Refer Section-3.18**

**2.** Briefly describe the auto transformer and its applications. **4-Marks**

**Ans. : Refer Section-3.33**

### May-2019

**3.** Explain voltage step-up and step-down operation in autotransformer with diagram. **4-Marks**

**Ans. : Refer Section-3.33**

**4.** Explain various connections of three phase transformer with diagram. **7-Marks**

**Ans. : Refer Section-3.39**

**5.** Derive the E.M.F. equation of a single phase transformer. **4-Marks**

**Ans. : Refer Section-3.21**

**6.** Explain with diagram construction of core type and shell type transformer. **7-Marks**

**Ans. : Refer Section-3.19**

Scanned with CamScanner

**January-2020**

7. Derive the EMF equation of single phase transformer. **4-Marks**

Ans. : **Refer Section-3.21**

8. Explain working principle of single phase Transformer. **3-Marks**

Ans. : **Refer Section-3.18**

**December-2020**

9. Explain various connections of three phase transformer with diagram. **7-Marks**

Ans. : **Refer Section-3.39**

10. Explain magnetic hysteresis. **3-Marks**

Ans. : **Refer Section-3.12**

11. Derive the E.M.F. equation of a single phase transformer **4-Marks**

Ans. : **Refer Section-3.21**

12. State the difference in core type and shell type transformer with neat and clean construction diagram. **7-Marks**

Ans. : **Refer Section-3.19 & 3.20**

■ ✻ ■

**Note : Also Refer GTU Paper Solutions at the End of the Book**



Scanned with CamScanner

CHAPTER 4

# Electrical Machines

Contents


4.1 Introduction
4.2 Rotating Magnetic Field ..... 2019, 2020
4.2.1 What is Rotating Magnetic Field ?
4.2.2 Generation of Rotating Magneting Field
4.3 3-phase Induction Motor
4.4 Construction of Three Phase Induction Motor
4.4.1 Stator
4.4.2 Rotor ..... 2019
4.4.3 Comparison Between Squirrel Cage and Slip Ring Induction Motor ..... 2019
4.5 Synchronous Speed
4.6 Working Principle of Three Phase Induction Motor
4.7 Slip
4.8 Frequency of Rotor Current
4.9 Starting Torque
4.9.1 Derivation of Starting Torque
4.10 Running Torque
4.10.1 Derivation of Running Torque
4.11 Torque – Slip Characteristic
4.12 Torque – Speed Characteristic
4.13 Equivalent Circuit of 3-Phase Induction Motor
4.14 Transformer Equivalent circuit of Induction Motor
4.15 Advantages of 3-Phase Induction Motor ..... 2020
4.16 Disadvantages of 3-Phase Induction Motor ..... 2020
4.17 Application of 3-phase induction motor ..... 2020
4.18 Single Phase Induction Motor Principle ..... 2019, 2020
4.19 Making Self Starting of 1-Phase Induction Motor ..... 2019
4.20 Types of Single Phase Induction Motor ..... 2019
4.20.1 Shaded Pole Single Phase Induction Motor
4.20.2 Resistance Start (Split-Phase) Single Phase Induction Motor
4.20.3 Capacitor Start Single Phase Induction Motor
4.20.4 Capacitor Run Single Phase Induction Motor
4.20.5 Capacitor Start Capacitor Run Single Phase Induction Motor (Double Value)
4.21 Applications of Single Phase Induction Motor
4.22 D.C. Machine
4.23 Working Principle of a D.C. Generator
4.24 Parts of the D.C. Machine ..... 2019
4.25 D.C. Motor ..... 2020
4.26 D.C. Motor Principle ..... 2020
4.27 Back EMF ..... 2019, 2020
4.28 Torque Equation of a D.C. Motor
4.29 Classification of D.C. Motors ..... 2019
4.30 Separately Excited DC Motor
4.31 Characteristics of Separately Excited D.C. Motors
4.31.1 Torque – Armature current Characteristics
4.31.2 Speed (N) and the armature current ($I_a$) Characteristics and Speed (N) and torque (T) Characteristics




Scanned with CamScanner

4.32 Speed Control of Separately Excited D.C. Motor
4.32.1 Speed Control of Separately Excited D.C. Motor
4.32.2 Field Control
4.32.3 Voltage Control Method
4.33 Advantages of Separately Excited d.c. Motor
4.34 Disadvantages of Separately Excited d.c. Motor
4.35 Applicaiton of Separately Excited d.c. Motor
4.36 Synchronous Generator ..... 2019
4.37 Construction of Synchronous Generator ..... 2019, 2020
4.38 Working Principle of Synchronous Generator ..... 2019
4.39 Working of Synchronous Generator
4.40 EMF Equation of Synchronous Generator
4.41 Distributed Winding and Concentrated Winding
4.42 Distribution Factor
4.43 Full Pitch Winding and Short Pitch Winding
4.44 Coil Span Factor
4.45 Vector Diagrams of Synchronous Generator
4.46 Voltage Regulation of Synchronous Generator
4.47 Methods of Determining Voltage Regulation of Synchronous Generator
4.48 Applications of Synchronous Generator
* Exercise
* GTU Questions and Answers

**G.T.U. QUESTION PAPER STATISTICAL ANALYSIS**

| | January-2019 | May-2019 | December-2020 |
|---|---|---|---|
| Marks | 31 | 28 | 31 |
| Repeated Questions Marks | – | 4 | 17 |

## 4.1 INTRODUCTION :

- An electrical machine is a device which converts mechanical energy into electrical energy or vice versa.
- There are two types of electrical machines :

1. Electric Generator
2. Electric Motor

### 1. Electric Generator :

- A generator is an electrical machine which converts mechanical energy into electrical energy.
- A generator works on the principle of electromagnetic induction. It states that whenever a conductor moves in a magnetic field, an emf gets induced within the conductor. This phenomenon is called as generator action.

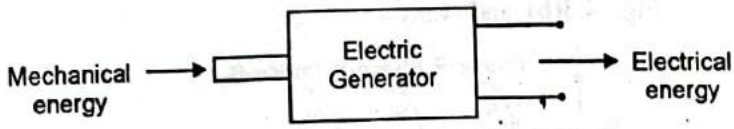


**FIG. 4.1 : ELECTRIC GENERATOR**

- There are two types of electric generators.

1. **AC Generator :** Converts mechanical energy into Alternating Current (AC) electricity.
2. **DC Generator :** Converts mechanical energy into energy into Direct Current (DC) electricity.

Scanned with CamScanner

**2. Electric Motor :**

- A motor is an electrical machine which converts electrical energy into mechanical energy.
- When a current carrying conductor is placed in a magnetic field, the conductor experiences a mechanical force and this is the working principle of electric motor.
- There are two types of electric Motors.

1. AC motors
2. DC motors

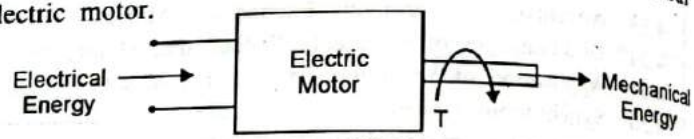


FIG. 4.2 : ELECTRIC MOTOR

- The motor which operate on d.c. supply is called d.c. motor.
- The motor which operate on a.c. supply is called a.c. motor.

**Syllabus Topic :** Generation of Rotating Magnetic Field

## 4.2 ROTATING MAGNETIC FIELD :

**GTU, Jan. 2019; May-2019; Jan. 2020; Dec. 2320**

**GTU Questions**

1. Explain the term rotating magnetic field with proper diagrams in case of a three phase induction motor. **[January-2019, 7-Marks]**
2. Discuss how the rotating magnetic field is produced in three phase induction motor. **[May-2019, January-2020, December-2020, 4-Marks]**

### 4.2.1 What is Rotating Magnetic Field ?

- The magnetic field, produced by the three phase ac motor, which has the constant magnitude and rotates at constant speed, is known as rotating magnetic field.
- The speed of rotating magnetic field is denoted by $N_s$.

$$N_s = \frac{120\,f}{p}$$

where, $f$ = supply frequency in Hz

$p$ = no. of stator poles

$N_s$ = speed of rotating magnetic field (is also known as synchronous speed)

### 4.2.2 Generation of Rotating Magneting Field :

- Consider the three identical windings (R, Y and B) which are placed on the stator at 120° apart to each other in space as shown in Fig. 4.3(a).
- The 3-phase supply is given to this three phase windings. Assume that the flux produced by each winding is purely sinusoidal.
- The waveform and vector diagram of the magnetic flux are shown in Fig. 4.3(b) and 4.3(c).

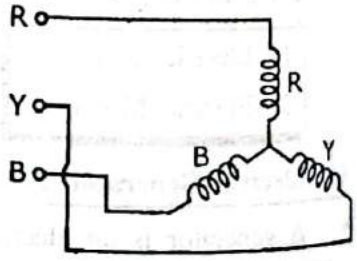


FIG. 4.3(a) : THREE PHASE WINDING

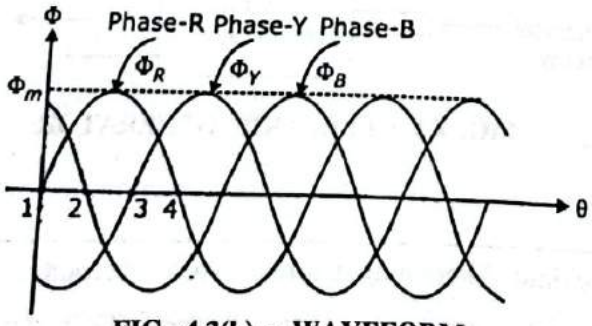


FIG. 4.3(b) : WAVEFORM

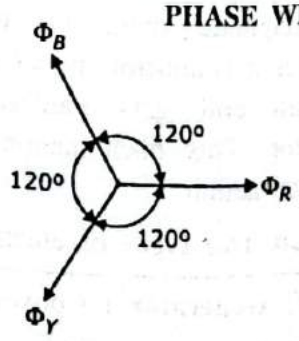


FIG. 4.3(c) : VECTOR DIAGRAM

Scanned with CamScanner

These fluxes can be represented by expressions.

$\phi_R = \phi_m \sin\omega t$

$\phi_Y = \phi_m \sin(\omega t - 120°)$

$\phi_B = \phi_m \sin(\omega t - 240°)$

Put $\omega t = \theta$ in the above equations

$\phi_R = \phi_m \sin\theta$ ... (1)

$\phi_Y = \phi_m \sin(\theta - 120°)$ ... (2)

$\phi_B = \phi_m \sin(\theta - 240°)$ ... (3)

The magnitude of each flux is $\phi_m$.

Let $\phi_R$, $\phi_Y$, $\phi_B$ be the instantaneous values of three fluxes. The resultant flux $\phi_r$ is the phaser addition of $\phi_R$, $\phi_Y$, $\phi_B$

$$\phi_r = \bar{\phi}_R + \bar{\phi}_Y + \bar{\phi}_B$$

Let us consider the four instants for finding $\phi_T$.

1st instant $\theta = 0°$

2nd instant $\theta = 60°$

3rd instant $\theta = 120°$

4th instant $\theta = 180°$

The phasor addition can be performed by obtaining the values of $\phi_R$, $\phi_Y$ and $\phi_B$ by substituting values of $\theta$ in the equations (1), (2) and (3), then we get

Case-I : $\theta = 0°$

Put $\theta = 0°$ in equations (1), (2) and (3), we get.

$$\phi_{R_0} = \phi_m \sin 0 = 0$$

$$\phi_{Y_0} = \phi_m \sin(0 - 120°)$$

$$= -\phi_m \sin 120°$$

$$= -\frac{\sqrt{3}}{2}\phi_m$$

$$\phi_{B_0} = \phi_m \sin(0 - 240°)$$

$$= -\phi_m \sin 240°$$

$$= \frac{\sqrt{3}}{2}\phi_m$$

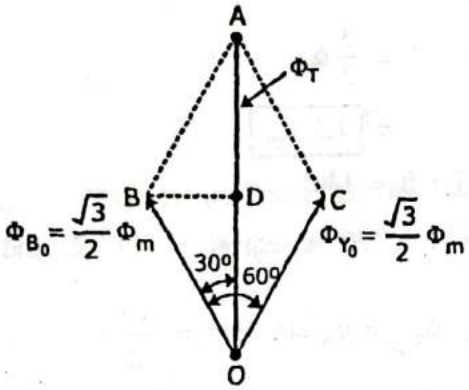


FIG. 4.4 : VECTOR DIAGRAM WHEN $\theta = 0°$

The three fluxes $\phi_{R_0}$, $\phi_{Y_0}$ and $\phi_{B_0}$ at the instant when $\theta = 0°$, are shown in the vector diagram of Fig. 4.6.

The resultant flux, when $\theta = 0°$

$$\phi_T = 2 \times OD$$

$$\phi_T = 2 \times OB \times \cos\frac{60°}{2}$$

$$= 2 \times \frac{\sqrt{3}}{2}\phi_m \cos\frac{60°}{2}$$

$$= \frac{3}{2}\phi_m$$

$$= \boxed{1.5\ \phi_m}$$

Scanned with CamScanner

**Case-II : $\theta = 60°$**

- Put $\theta = 60°$ in equations (1), (2) and (3),

$$\phi_{R_{60}} = \phi_m \sin 60° = \frac{\sqrt{3}}{2}\phi_m$$

$$\phi_{Y_{60}} = \phi_m \sin (60° - 120°)$$

$$= -\phi_m \sin 60°$$

$$= -\frac{\sqrt{3}}{2}\phi_m$$

$$\phi_{B_{60}} = \phi_m \sin (60° - 240°)$$

$$= -\phi_m \sin 180°$$

$$= 0$$

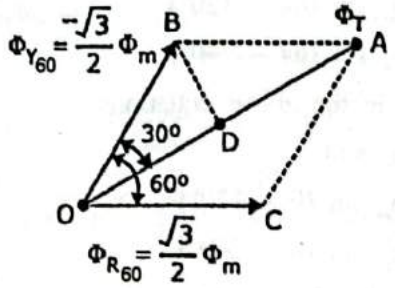


**FIG. 4.5 : VECTOR DIAGRAM WHEN $\theta = 60°$**

- The three fluxes $\phi_{R_{60°}}$, $\phi_{Y_{60°}}$ and $\phi_{B_{60°}}$ at he instant when $\theta = 60°$ are shown in the vector diagram of Fig. 4.5.

- The resultant flux, when $\theta = 60°$

$$\phi_T = 2 \times OD$$

$$\phi_T = 2 \times OB \times \cos \frac{60°}{2}$$

$$= 2 \times \frac{\sqrt{3}}{2}\phi_m \cos \frac{60°}{2}$$

$$= \frac{3}{2}\phi_m$$

$$= \boxed{1.5\ \phi_m}$$

**Case-III : $\theta = 120°$**

- Put $\theta = 120°$ in equations (1), (2) and (3), we get

$$\phi_{R_{120}} = \phi_m \sin 120° = \frac{\sqrt{3}}{2}\phi_m$$

$$\phi_{Y_{120}} = \phi_m \sin (120° - 120°)$$

$$= \phi_m \sin 0°$$

$$= 0$$

$$\phi_{B_{120}} = \phi_m \sin (120° - 240°)$$

$$= -\phi_m \sin 120°$$

$$= -\frac{\sqrt{3}}{2}\phi_m$$

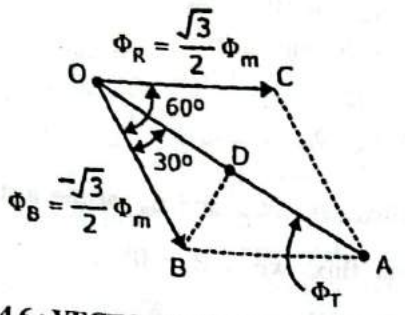


**FIG. 4.6 : VECTOR DIAGRAM WHEN $\theta = 120°$**

- The three fluxes $\phi_{R_{120°}}$, $\phi_{Y_{120°}}$ and $\phi_{B_{120°}}$ at he instant when $\theta = 60°$ are shown in the vector diagram of Fig. 4.6.

- The resultant flux, when $\theta = 120°$

$$\phi_T = 2 \times OD$$

Scanned with CamScanner

$$\phi_T = 2 \times OB \times \cos\frac{60°}{2}$$

$$= 2 \times \frac{\sqrt{3}}{2}\phi_m \cos\frac{60°}{2}$$

$$= \frac{3}{2}\phi_m$$

$$= \boxed{1.5\ \phi_m}$$

**Case-IV : $\theta = 180°$**

- Put $\theta = 180°$ in equations (1), (2) and (3), we get

$$\phi_{R_{180}} = \phi_m \sin 180° = 0$$

$$\phi_{Y_{180}} = \phi_m \sin (180° - 120°)$$

$$= \phi_m \sin 60°$$

$$= \frac{\sqrt{3}}{2}\phi_m$$

$$\phi_{B_{180}} = \phi_m \sin (180° - 240°)$$

$$= -\phi_m \sin 60°$$

$$= -\frac{\sqrt{3}}{2}\phi_m$$

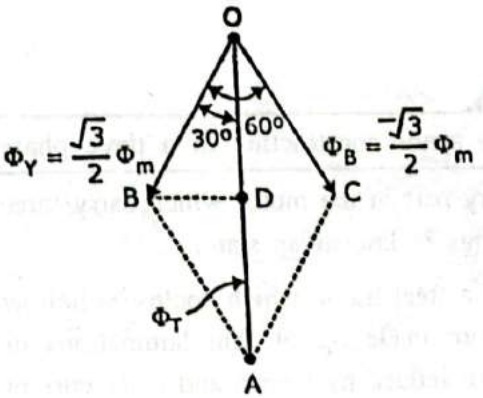


**FIG. 4.7 : VECTOR DIAGRAM WHEN $\theta = 180°$**

- The resultant flux, when $\theta = 180°$

$$\phi_T = 2 \times OD$$

$$\phi_T = 2 \times OB \times \cos\frac{60°}{2}$$

$$= 2 \times \frac{\sqrt{3}}{2}\phi_m \cos\frac{60°}{2}$$

$$= \frac{3}{2}\phi_m$$

$$= \boxed{1.5\ \phi_m}$$

- Similarly by considering the various values of $\theta$ up to 360°, it is observed that the resultant flux $\phi_r$ is further shifted to clockwise direction, however the magnitude remains the same.
- When 3 phase winding is supplied from 3-phase supply, a rotating magnetic field is produced. This filed rotates in space around the stator.

**Syllabus Topic : Construction and Working of 3-phase induction motor**

## 4.3 3-PHASE INDUCTION MOTOR :

- The most common type of A.C. motor being used throughout the work today is the **"Induction Motor"**. Induction Motors are found everywhere from a small workshop to a large manufacturing industry.
- The advantages of induction motor are listed below :
  1. Simple design
  2. Rugged construction

Scanned with CamScanner

3. Reliable operation
4. Low initial cost
5. Easy operation and simple maintenance
6. Simple control gear for starting and speed control.
7. High efficiency

- Induction motor is originated in the year 1891. (The induction machine principle was invented by NIKOLA TESLA in 1888).

## 4.4 CONSTRUCTION OF THREE PHASE INDUCTION MOTOR :

- The three phase induction motor divided into two parts

1. Stator
2. Rotor

- The rotor is separated from the stator by a small air-gap which ranges from 0.4 mm to 4 mm depending on the power of the motor.

### 4.4.1 Stator :

**GTU, January-2019**

**GTU Questions**

**1.** Describe the stator construction of a three phase induction motor. **[January-2019, 3-Marks]**

- The stationary part in the motor which carry three phase windings is known as stator.
- It consists of a steel frame which enclose a hollow cylindrical core made up of thin laminations of silicon steel to reduce hysteresis and eddy current losses.
- A number of slots are provided on the inner periphery of the laminations.
- The insulated conductors are suitably connected to from a bacanced 3 phase star or delta connected circuit.

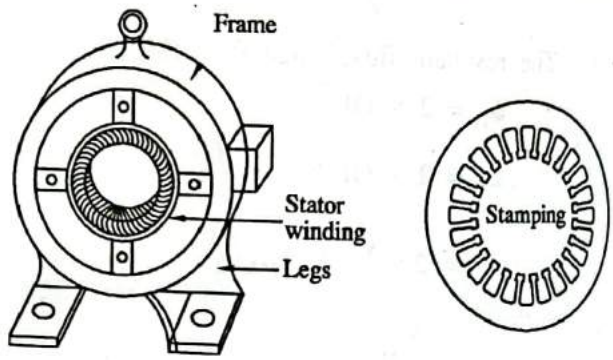


**FIG. 4.8 : ARRANGEMENT OF STATOR IN THREE PHASE INDUCTION**

- The above figure shows the arrangement of stator in three phase induction motor. The speed of three phase induction motor depends upon the number of poles present in the motor.
- The three phase stator winding is wound for a definite number of poles as per requirement of speed.
- When three phase supply is given to the stator winding, a rotating magnetic field of constant magnitude is produced. This rotating field induced current in the rotor by electromagnetic induction that's why the motor is known as **induction motor**.

### 4.4.2 Rotor :

- The part which rotates and is connected to the mechanical load through shaft is called rotor. The rotor is placed inside the stator.
- The core is also laminated in construction it made up of cast iron. It is cylindrical with slots on it's periphery. The rotor conductor is placed in the rotor slots.

Scanned with CamScanner

- There are two types of rotor is used in induction motor.

1. Squirrel Cage Motor
2. Slip Ring Motor

## 1. Squirrel Cage Motor :

- It consists a laminated cylindrical core having parallel slots on its outer periphery. The copper or aluminium bars are placed in the slots.
- These bars are permanently shorted at each end with the help of conducting copper ring called end ring. The entire structure looks like a cage, forming a closed electrical circuit. Therefore, the rotor is called squirrel cage motor.
- The rotor is also known as short circulated rotor because the bars are permanently shorted to each other through end ring. The entire rotor resistance is very small, no external resistance can be introduced in the rotor circuit.
- Fig. 4.9 shows the schematic arrangement of squirrel cage rotor.

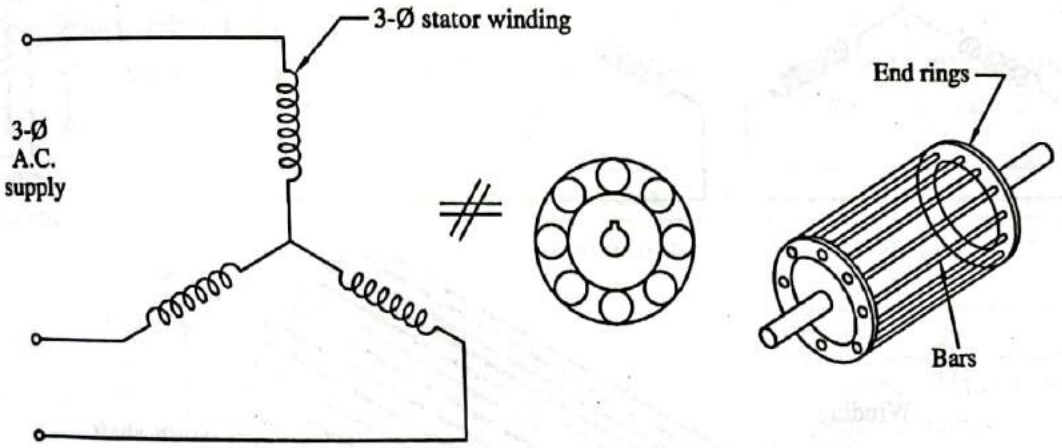


**FIG. 4.9 : SQUIRREL CAGE INDUCTION MOTOR**

- The rotor is not connected electrically to the supply because current induced in it by transformer action from the stator. Those induction motors which used squirrel cage rotor are called squirrel cage induction motors.
- Slip ring and brush assembly is not required for this rotor and the construction of this rotor is very simple hence most of the three phase induction motors use squirrel cage rotor.

**Advantages :**

1. Slip ring and brush assembly is not required.
2. Simple in construction.

**Disadvantages :**

1. Low starting torque.

## 2. Slip Ring Motor :

**GTU, January-2019**

**GTU Questions**

1. Describe the construction of rotor for a slip ring type three phase induction motor. **[January-2019, 3-Marks]**



Scanned with CamScanner

- In slip ring rotor construction rotor winding is exactly similar to the stator. The rotor winding is uniformly distributed in the slots and it is usually star or delta connected. It carry the same number of poles as that of stator.
- The rotor construction is laminated and slotted. The slots contain the rotor winding. The three ends of three phase windings available after connecting the winding in star or delta are permanently connected to the slip rings. The slip rings are used to connect external stationary circuit to the internal rotating circuit.
- Fig. 4.10 shows the circuit arrangement of slip ring rotor.
- In this case, the external resistances can be added with the help of brushes and slip ring arrangement in series with each phase of the rotor winding.

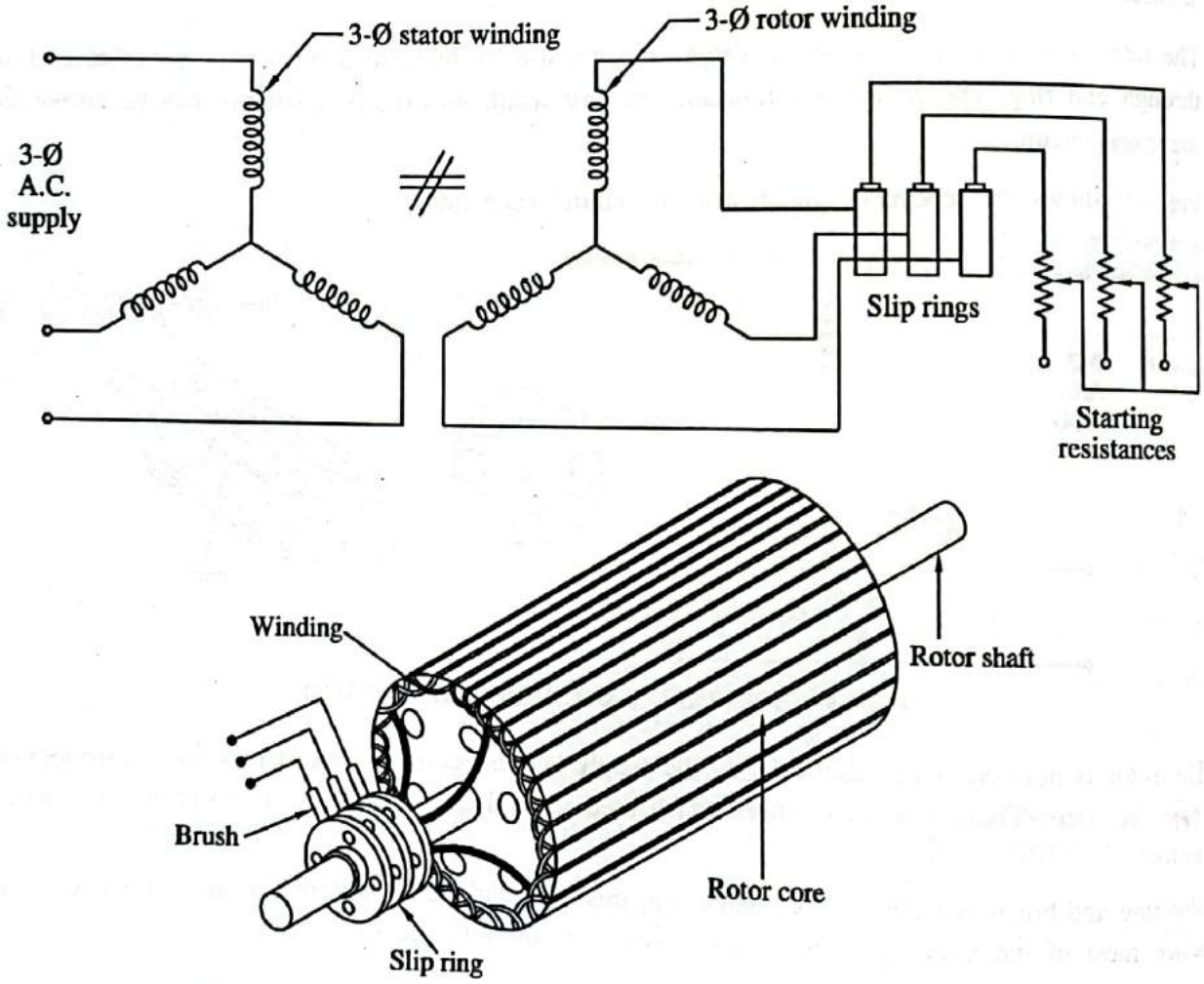


FIG. 4.10 : WOUND ROTOR OR SLIP RING INDUCTION MOTOR

- At starting the external resistances are included in the rotor circuit to give a large starting torque. These resistances are gradually reduced to zero as the motor runs up to speed. The external resistances are used during starting period only.
- When the motor attains normal speed the three brushes are short circulated so that the wound rotor runs like a squirrel cage motor. The slip ring rotor is also known as wound rotor.

Scanned with CamScanner

### 4.3 Comparison Between Squirrel Cage and Slip Ring Induction Motor : GTU, January-2019

GTU Questions

Give a comparison between Squirrel Cage Induction Motor and Wound Rotor Induction Motor. [January-2019, 4-Marks]

| Squirrel Cage Induction Motor | Slip Ring (Wound Rotor) Induction Motor |
|---|---|
| 1. In Squirrel induction motors the rotor is simplest and most rugged in construction. | In slip ring induction motor and rotor is wound type. In the motor the slip rings, brushes are provided. Compared to squirrel cage rotor the rotor construction is not simple. |
| 2. Cylindrical Laminated core rotor with heavy bars or copper or aluminium or alloys are used for conductors. | Cylindrical laminated core rotor is wound for as the number of poles of the stator. |
| 3. Rotor conductors or rotor bars are short circuited with end rings. | At starting the 3 phase windings are connected to a star connected rheostat and during running condition, the windings is short circuited at the slip rings. |
| 4. Rotor bars are permanently short circuited and hence it is not possible to connect external resistance in the circuit in series with the rotor conductors. | It is possible to insert additional resistance in the rotor circuit. Therefore it is possible to increase the torque (the additional series resistance is used for starting purposes) |
| 5. Cheaper cost. | Cost is slightly higher. |
| 6. No moving contacts in the rotor. | Carbon brushes, slip rings etc. are provided in the rotor circuit. |
| 7. Higher efficiency. | Comparatively less efficiency. |
| 8. Low starting torque. It is 1.5 time full load torque. | High starting torque. It can be obtained by adding external resistance in the rotor circuit. |
| 9. Speed control by rotor resistance is not possible. | Speed control by rotor resistance is possible. |
| 10. Starting current is 5 to 7 times the full load. | Less starting current. |

### 4.5 SYNCHRONOUS SPEED :

- The speed at which the rotating field rotates is called *synchronous speed*. It is written as $N_s$. The value of synchronous speed depends upon the number of poles and the supply frequency.

$$\therefore \quad \boxed{N_s = \frac{120 \cdot f}{P}}$$

where

$N_s$ = Synchronous speed

$f$ = Supply frequency

P = Number of poles

- Thus, for a 4 pole, 50 Hz motor the synchronous speed;

$$N_s = \frac{120 \times 50}{4}$$

$$= \boxed{1500 \text{ r.p.m.}}$$

Scanned with CamScanner

## 4.6 WORKING PRINCIPLE OF THREE PHASE INDUCTION MOTOR :

- Consider a portion of three phase induction motor as shown in Fig. 4.11.

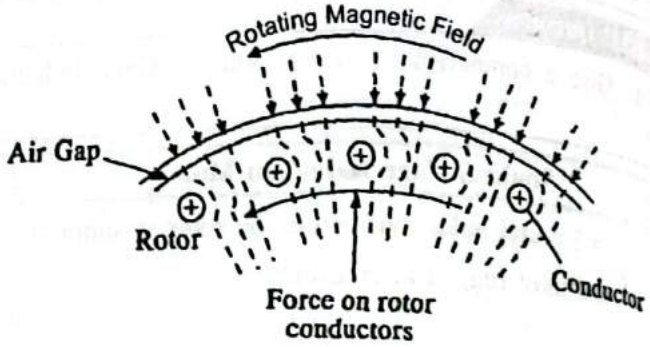


FIG. 4.11 : WORKING PRINCIPLE OF 3-PHASE INDUCTION MOTOR

**Operation :**

- When 3-phase stator winding is energized from a 3-phase supply, a rotating magnetic field is set up which rotates around the stator at synchronous speed $N_s = \frac{120 \cdot f}{P}$.
- The rotating field passes through the air gap and cuts the rotor conductors which as yet, are stationary.
- Due to the relative speed between the rotating flux and the stationary rotor, e.m.fs are induced in the rotor conductors. Since the rotor circuit is short-circulated, currents start flowing in the rotor conductors.
- When the rotor starts rotating and picks up the speed then it tends to attain the synchronous speed but it does not, because if the rotor attains the synchronous speed then the relative speed between the rotating flux and rotor will be zero, therefore, no e.m.f. will be induced in the rotor conductors. Hence there is no current in the rotor conductors and no torque is produced.
- Thus an induction motor never runs at a synchronous speed but it always runs at a speed less than the synchronous speed.

## 4.7 SLIP :

- It is seen above that rotor of an induction motor does not run at a synchronous speed but at a speed less than synchronous speed. The difference between the synchronous speed $N_s$ of the rotating stator flux and the actual speed of the rotor N is called slip.
- It is usually expressed as a percentage of synchronous speed i.e.

$$\boxed{\%\text{ age slip, } S = \frac{N_s - N}{N_s} \times 100}$$

$\therefore$ Rotor speed, $N = N_s (1 - S)$

- The quantity $(N_s - N)$ is called slip speed. When the rotor is stationary i.e., N = 0, then slip, S = 1.
- Therefore, slip of induction motor cannot be zero under any condition. Practically motor operates in the slip range of 0.01 to 0.05 i.e. 1% to 5%.
- The slip corresponding to full load speed of the motor is called **full load slip.** Slip is unitless hence it expressed in terms of percentage.

## 4.8 FREQUENCY OF ROTOR CURRENT :

- When the motor is stationary, the frequency of the rotor is the same as that of the supply frequency. But when the rotor starts rotating, the frequency of the rotor current depends upon the relative speed or slip speed $(N_s - N)$.
- Let at any speed N the frequency of rotor current be $f'$, then

$$f' = \frac{(N_s - N)\,P}{120} = \frac{(N_s - N)}{N_s} \cdot \frac{N_s \cdot P}{120}$$

$$\boxed{f' = S \cdot f}$$

Scanned with CamScanner

**Example-4.1 :**

**An 8-pole, 3-phase induction motor is connected to 50 Hz supply. If it is running at 720 r.p.m. find the slip.**

*Solution :*

Number of poles, P = 8

Supply frequency, $f$ = 50 Hz

Rotor speed, N = 720 r.p.m.

$$\text{Synchronous speed, } N_s = \frac{120\,f}{P}$$

$$= \frac{120 \times 50}{8}$$

$$= 750 \text{ r.p.m.}$$

$$\text{\% age slip, } S = \frac{N_s - N}{N_s} \times 100$$

$$= \frac{750 - 720}{750} \times 100$$

$$= \boxed{4\%}$$ ... Ans.

**Example-4.2 :**

**A 3-phase induction motor is wound for 4-pole and is supplied from 50 Hz system calculate (i) the synchronous speed, (ii) the speed of the motor when slip is 4% and (iii) the rotor current frequency when the motor runs at 600 r.p.m.**

*Solution :*

Number of poles, P = 4

Supply frequency, $f$ = 50 Hz

(i) $$\text{Synchronous speed, } N_s = \frac{120\,f}{P}$$

$$= \frac{120 \times 50}{4}$$

$$= \boxed{\textbf{1500 r.p.m.}}$$ ∴ Ans.

(ii) $$\text{\% slip, } S = \frac{N_s - N}{N_s}$$

or $$\frac{4}{100} = \frac{1500 - N}{1500}$$

∴ $$N = 1440 \text{ r.p.m.}$$

(iii) When speed, $N_r$ = 600 r.p.m.

∴ $$S = \frac{1500 - 600}{1500}$$

$$= 0.6$$

∴ Rotor current frequency, $f' = S \cdot f$

$$f' = 0.6 \times 50$$

$$= \boxed{\textbf{30 Hz}}$$

Scanned with CamScanner

**Example-4.3 :**

**A 4-pole, 3-phase alternator drives at 500 r.p.m. is supplying to an induction motor which has full load speed of 1440 r.p.m. Find the percentage slip and number of poles.**

***Solution :***

Number of poles of an alternator $P_a = 4$

Speed of alternator, $N_a = 1500$ r.p.m.

$$\therefore \quad \text{Supply frequency, } f = \frac{N_a \cdot P_a}{120}$$

$$= \frac{1500 \times 4}{120}$$

$$= 50 \text{ Hz}$$

$$\therefore \quad \text{Synchronous speed, } N_s = \frac{120 \times 50}{4} \quad 1500 \text{ r.p.m.}$$

$$\text{\% age slip, } S = \frac{1500 - 1440}{1500} \times 100$$

$$= \boxed{4\%.}$$

## 4.9 STARTING TORQUE :

- The torque developed by motor during starting period is known as Starting Torque.

### 4.9.1 Derivation of Starting Torque :

- The starting torque is proportional to the multiplication of stator flux, rotor current and rotor power factor during starting condition. So, the starting torque can be given by;

$$T_s \propto \phi I_2 \cos\phi_2$$

But,

$$I_2 = \frac{E_2}{Z_2} = \frac{E_2}{\sqrt{R_2^2 + X_2^2}}$$

$$\cos\phi_2 = \frac{R_2}{Z_2} = \frac{R_2}{\sqrt{R_2^2 + X_2^2}}$$

Hence,

$$T_s = \frac{E_2}{\sqrt{R_2^2 + X_2^2}} \cdot \frac{R_2}{\sqrt{R_2^2 + X_2^2}}$$

$$\boxed{T_s = \frac{k \phi E_2 R_2}{R_2^2 + X_2^2}}$$

where, $k$ = Constant

$\phi$ = Stator flux in Wb

$E_2$ = Rotor EMF at standstill condition in volt

$R_2$ = Rotor resistance in ohm

$X_2$ = Rotor reactance at standstill condition in ohm.

Scanned with CamScanner

## 4.10 RUNNING TORQUE :

- The torque developed by motor during running period is known as Running Torque.

### 4.10.1 Derivation of Running Torque :

- The running torque is proportional to the multiplication of stator flux, rotor current and rotor power factor during running condition. So, the running torque can be given by;

$$T_r \propto \phi I_2' \cos\phi_2'$$

But,

$$I_2' = \frac{E_2'}{Z_2'} = \frac{E_2'}{\sqrt{R_2^2 + X_2'^2}} = \frac{SE_2}{\sqrt{R_2^2 + (SX_2)^2}} \text{ and}$$

$$\cos\phi_2' = \frac{R_2}{Z_2'} = \frac{R_2}{\sqrt{R_2^2 + X_2'^2}} = \frac{R_2}{\sqrt{R_2^2 + (SX_2)^2}}$$

Hence,

$$T_r = \frac{SE_2}{\sqrt{R_2^2 + (SX_2)^2}} \cdot \frac{R_2}{\sqrt{R_2^2 + (SX_2)^2}}$$

$$\boxed{T_r = \frac{k\phi S E_2 R_2}{\sqrt{R_2^2 + (SX_2)^2}}}$$

where, $k$ = Constant
$\phi$ = Stator flux in Wb
$S$ = Slip
$E_2$ = Rotor EMF at standstill condition in volt
$R_2$ = Rotor resistance in ohm
$X_2$ = Rotor reactance at standstill condition in ohm.

## 4.11 TORQUE – SLIP CHARACTERISTIC :

- The torque – slip characteristic of the induction motor is shown in Fig. 4.12. In general, the torque of the induction motor is given by

$$\boxed{T = \frac{k\phi S E_2 R_2}{\sqrt{R_2^2 + (SX_2)^2}}}$$

**Cash-1 : When slip is zero (S = 0)**

- The torque of induction motor is proportional to the slip. When the slip is zero, the torque will be zero. It means, the induction motor cannot run at synchronous speed at all.

**Cash-2 : When slip is very small :**

- The component $(SX_2)^2$ is very small compared to $R_2^2$. Hence can be neglected. Assuming $k$, $\phi$, $E_2$ and $R_2$ constant. So, we can get

$$\boxed{T \propto S}$$

- It means for small value of slip (S), the motor torque is direction proportional to slip (S). So, the curve between torque and slip becomes straight line.

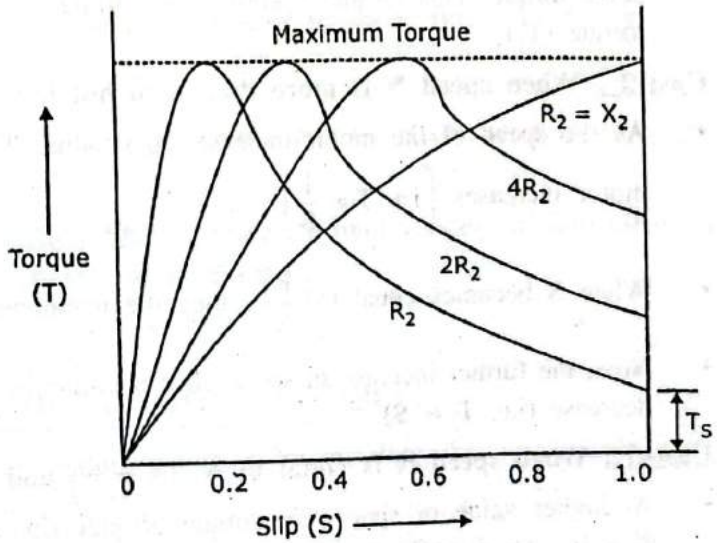


FIG. 4.12 : TORQUE - SLIP CHARACTERISTIC

Scanned with CamScanner

**Case-3 : When slip is very high :**

- When the value of slip will increase and when $S = \frac{R_2}{X_2}$, then the maximum torque will occur. The component $R_2^2$ is very small as compared to $(SX_2)^2$, at higher value of slip.
- So, the component $R_2^2$ can be neglected with respect to $(SX_2)^2$.
- Hence, we can get,

$$\boxed{T \propto \frac{1}{S}}$$

- It means for the higher value of slip (S), the torque developed by the motor is inversely proportional to the slip (S).

**Case-4 : When slip is one (S = 1)**

- For slip S = 1, the value of torque does not become zero but we will get some torque. This torque is known as starting torque ($T_s$).

**Shape of Curve :**

- The shape of the torque-slip characteristic is rectangular hyperbola. The torque will increase with increase in slip. But, after crossing maximum torque line, the torque will decrease with increase in slip (S).

## 4.12 TORQUE – SPEED CHARACTERISTIC :

- The torque speed characteristic is the mirror image of the torque - slip characteristic. It is shown in Fig. 4.13.
- In general, the torque of the induction motor is given by;

$$\boxed{T = \frac{k\phi S E_2 R_2}{\sqrt{R_2^2 + (SX_2)^2}}}$$

**Case-1 : When speed N is zero (N = 0 and S = 1)**

- At the time of starting, for slip S = 1, the value of torque does not become zero but we can get some torque. This torque is known as starting torque ($T_s$).

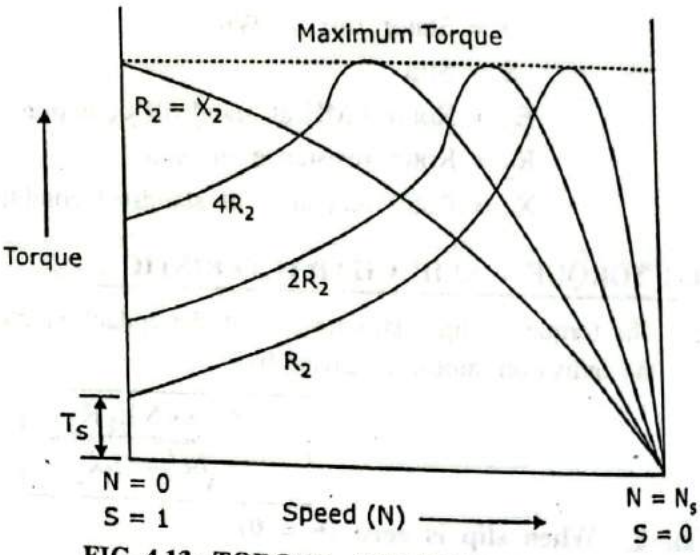


**FIG. 4.13 : TORQUE - SPEED CHARACTERISTIC**

**Case-2 : When speed N is more than zero but less than $N_s$ :**

- As the speed of the motor increases, the value of slip will decrease and the torque developed by the motor increases $\left(\text{i.e. } T \propto \frac{1}{S}\right)$.
- When S becomes equal to $\frac{R_2}{X_2}$, then the maximum torque will be occur.
- Now, the further increase in speed after maximum torque, the slip will decrease, and the torque will also decrease (i.e. $T \propto S$).

**Case-3 : When speed N is equal to $N_s$ (N = $N_s$ and S = 0) :**

- At higher value of speed the torque of induction motor is proportional to the slip. When the speed N = $N_s$ (i.e. S = 0), the torque will be zero. It means, the induction motor cannot run at synchronous speed at all.

Scanned with CamScanner

**Shape of Curve :**

- The shape of the torque – speed characteristic is rectangular hyperbola. The torque speed characteristic is the mirror image of the torque – slip characteristic.

## 4.13 EQUIVALENT CIRCUIT OF 3-PHASE INDUCTION MOTOR :

- Induction motor is a well-known device which works on the principle of transformer. So it is also called the rotating transformer.
- In a 3-phase induction motor, the stator winding is connected to a 3-phases supply.

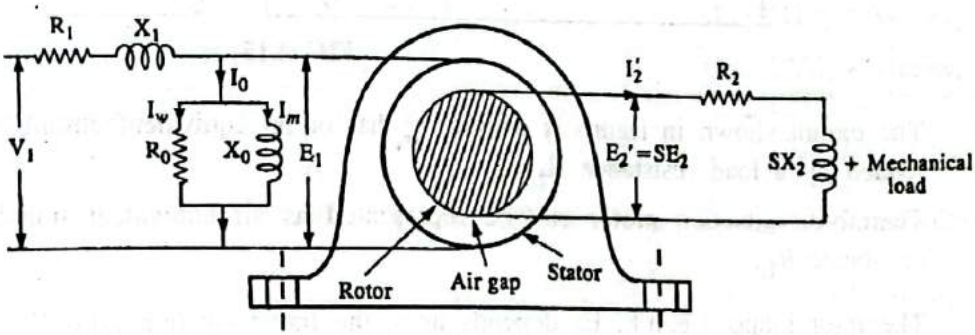


**FIG. 4.14 : EQUIVALENT CIRCUIT OF 3-PHASE INDUCTION MOTOR**

- The energy is transferred from stator winding to rotor winding entirely by induction, therefore, an induction motor may be considered as a transformer with a short circuit secondary i.e. rotor winding.
- The stator of the motor corresponds to transformer primary and the rotor winding corresponds to transformer secondary.
- The flux and voltage conditions of the motor are similar to that of a transformer, one can expect that the equivalent circuit of a motor will be similar to that of a transformer.
- The equivalent circuit of 3-phase induction motor is shown in Fig. 4.14, where $V_1$ is the applied voltage per phase. $R_1$ and $X_1$ are stator resistance and leakage reactance per phase respectively.
- The applied voltage $V_1$ produces magnetic flux, which links the stator winding in the primary and mutually induced e.m.f. $E_2'$ (= $SE_2$ = S.K. $E_1$ where K is a transformation ratio) is induced in the secondary (rotor). The stator current, $I_1$ causes voltage drop in $R_1$ and $X_1$.

$$\therefore \quad \boxed{\vec{V}_1 = \vec{E}_1 + I_1(\vec{R}_1 + j\vec{X}_1)}$$

- At no load, the stator winding draws no load current $I_0$ which has two components Viz; $I_w$ and $I_m$.
- $I_w$ supplies the no load motor losses and $I_m$ sets up magnetic flux in the core. The parallel combination of $R_0$ and $X_0$ represents the no load motor losses and production of magnetic flux respectively.

$$\boxed{\vec{I}_0 = \vec{I}_w + \vec{I}_m}$$

- Here $R_2$ and $X_2$ represent the resistance and leakage reactance per phase of the rotor circuit. At any value of slip, the rotor reactance will be $X_2'$ (= $SX_2$).
- The induced voltage/phase in the rotor is $E_2'$ (= $SE_2$ = SK·$E_1$). Since the rotor winding is short circuited, so the entire e.m.f. i.e., $E_2'$ is used in circulating the rotor current $I_2'$.

$$\boxed{E_2' = I_2'(R_2 + jSX_2)}$$

## 4.14 TRANSFORMER EQUIVALENT CIRCUIT OF INDUCTION MOTOR :

- Fig. 4.15 is shown as equivalent per phase of a 3-phase induction motor. Here, the mechanical load is shown replaced by an equivalent electrical resistance $R_L$.

$$R_L = R_2\left(\frac{1}{S} - 1\right)$$



Scanned with CamScanner

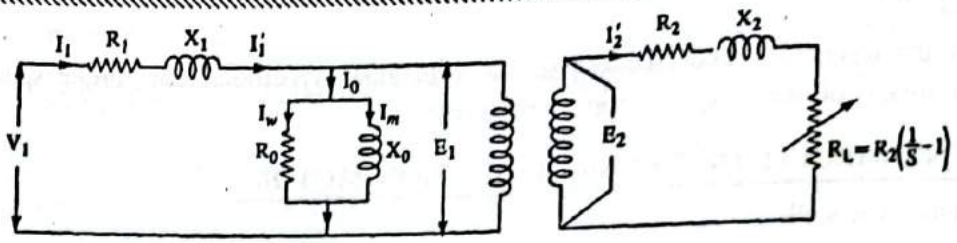


FIG. 4.15

- The circuit shown in figure is similar to that of an equivalent circuit of a transformer with secondary loaded by a load resistance $R_L$.
- Therefore, induction motor can be represented as an equivalent transformer connected to a variable resistance $R_L$.
- The rotor induced e.m.f., $E_2$ depends upon the transformation ratio $K\left(=\frac{E_2}{E_1}\right)$ and the power delivered to $R_L$ represents the total mechanical power developed in the rotor.

## 4.15 ADVANTAGES OF 3-PHASE INDUCTION MOTOR : GTU, January-2020

**GTU Questions**

**1.** Give Merit, Demerit and application of Induction Motor. **[January-2020, 4-Marks]**

1. The most important advantage of an induction motor is that its construction is quite simple in nature.
2. The working of the motor is independent of the environmental condition.
3. A squirrel cage induction motor does not contain Brushes, Slip rings and Commutators. Due to this reason, the cost of the motor is quite low. However, Slip Rings are used in Wound type induction motor to add external resistance to the rotor winding.
4. Due to the absence of Brushes, there are no sparks in the motor. It can also be operated in hazardous conditions.
5. Unlike synchronous motors, a 3-phase induction motor has a high starting torque, good speed regulation and reasonable overload capacity.
6. An induction motor is highly efficient machine with full load efficiency varying from 85 to 97 percent.

## 4.16 DISADVANTAGES OF 3-PHASE INDUCTION MOTOR : GTU, January-2020

**GTU Questions**

**1.** Give Merit, Demerit and application of Induction Motor. **[January-2020, 4-Marks]**

1. Speed control of an induction motor is very difficult to attain. This is because a 3-phase induction motor is a constant speed motor and for the entire loading range, the change in speed of the motor is very low.
2. Due to poor starting torque, the motor cannot be used for applications which require high starting torque.

## 4.17 APPLICATION OF 3-PHASE INDUCTION MOTOR : GTU, January-2020

**GTU Questions**

**1.** Give Merit, Demerit and application of Induction Motor. **[January-2020, 4-Marks]**

1. Electric Train engine
2. Cooling fans used to cool large machines like alternators etc.
3. Chimneys at power plants
4. Printing machines
5. Rolling mills

Scanned with CamScanner

Syllabus Topic : Construction and Working of 1-phase induction motor

## 4.18 SINGLE PHASE INDUCTION MOTOR PRINCIPLE : GTU, May-2019; Dec. 2020

**GTU Questions**

1. Explain the working of single phase induction motor with diagram. [May-2019, 7-Marks]
2. Why single phase induction motor is not self starting. [Dec. 2020, 4-Marks]

- A single phase induction motor essentially consists of a stator and a rotor.
- Single phase winding is placed in the stator slots and cage winding on the rotor.
- When a.c. single phase supply is given to the stator winding, a pulsating field is produced. By pulsating field, we mean that the field builds in one direction then falls to zero and then it builds in the opposite direction. Under this condition, the rotor does not rotate due to inertia.
- Therefore, a single phase induction motor is inherently not self starting.

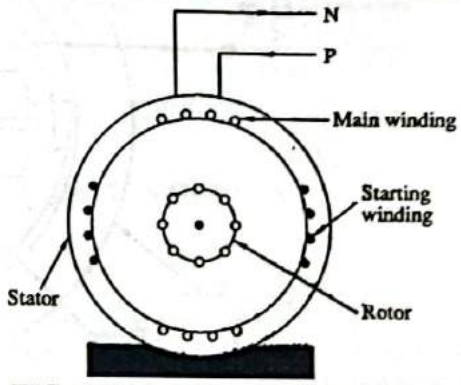


FIG. 4.16 : 1-ϕ INDUCTIN MOTOR

## 4.19 MAKING SELF STARTING OF 1-PHASE INDUCTION MOTOR :

- To make a single phase induction motor self starting, we must have a revolving stator magnetic field, which should be produced by any means.
- This can be achieved by converting single phase supply in to two phase supply by using an additional winding.
- When the motor has attained the maximum speed, the additional winding is cut off from the supply.
- The single phase induction motors are classified and named according to the method used for making them self starting.

1. **Split phase Motors :** These motors are started by two phase motor action through the use of an additional winding or starting winding.
2. **Capacitor Motors :** These are also started by two phase motor action by using an additional winding and a capacitor.
3. **Shaded-pole Motors :** These are started by the movement of magnetic flux produced by means of shading coil around a portion of the pole.

## 4.20 TYPES OF SINGLE PHASE INDUCTION MOTOR : GTU, January-2019

**GTU Questions**

1. Mention the types of single phase induction motor. Explain any one of them. [January-2019, 4-Marks]

- The different types of single phase induction motors are listed below;

1. Shaded Pole Single Phase I.M.
2. Resistance Start Single Phase I.M.
3. Capacitor Start Single Phase I.M.
4. Capacitor Run Single Phase I.M.
5. Capacitor Start Capacitor Run Single Phase I.M.

### 4.20.1 Shaded Pole Single Phase Induction Motor :

- Fig. 4.17 shows the shaded pole single phase induction motor. There are main two parts of the shaded pole single phase induction motor;

Scanned with CamScanner

Stator – Field System

Rotor – Armature System

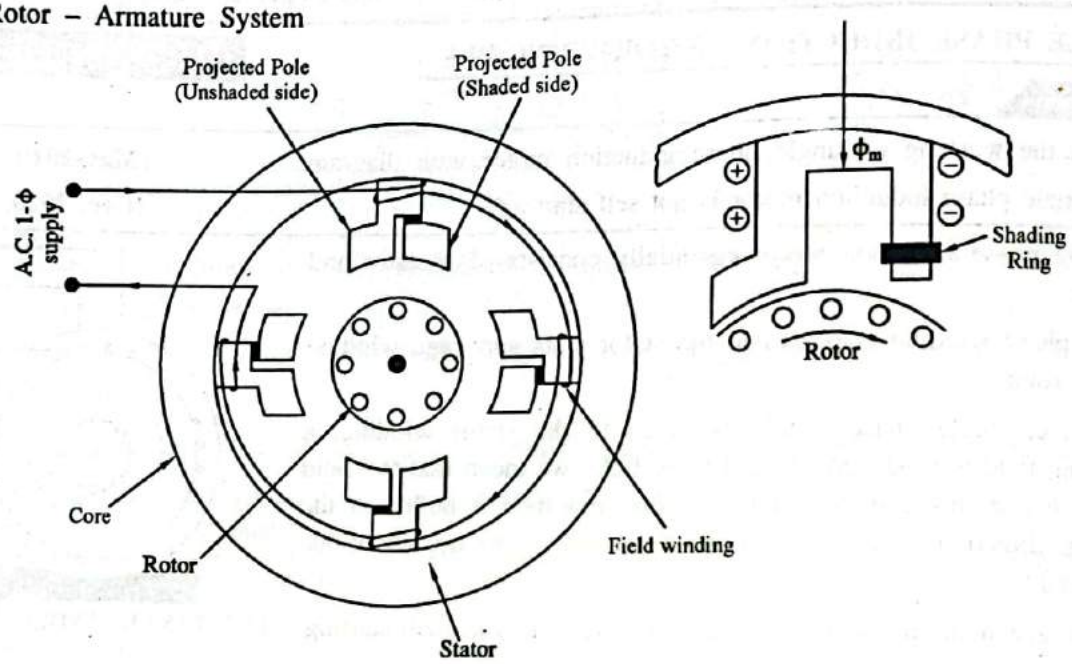


**FIG. 4.17 : SHADED POLE INDUCTION MOTOR**

**Stator Field System :**

**GTU Questions**

1. Describe the stator construction of a single phase induction motor. **[January-2019, 3-Marks]**

- The different parts of the stator of shaded pole single phase induction motor are listed below;
  1. **Projected Poles :** This type of single phase induction motor contains projected poles. The projected poles are made from silicon steel material to reduce the hysteresis losses. Also they are in form of stampings and laminated to reduce the eddy current losses.
  2. **Core :** The projected poles are connected through the core. The core is also made from silicon steel material and they are laminated.
  3. **Field Winding :** The field winding is wound on the C-shaped core. Its main function is to produce the main flux of the machine.
  4. **Slot :** At 1/3 of pole shoe of each pole, one slot is placed. The copper ring is wound on the small part of the pole shoe. This part is known as shaded part. Another part of the pole shoe is known as un-shaded part.

**Rotor – Armature System :**

- The following points are considered for the construction of rotor of single phase induction motor;
  1. **Armature Core :** The armature core is made from silicon steel material. Also, they are laminated. The armature core has number of slots on its outer periphery. It provides the path to magnetic flux.
  2. **Armature Winding :** The armature winding is in form of heavy bars made from copper. They are housed in the slots of the armature core.
  3. **End Rings :** The copper bars are short circuited with the help of end rings on both sides.

**Working :**

- When the single phase supply is given to the stator winding of the motor, the magnetic flux will produced in the pole. This magnetic field is alternating in nature.

Scanned with CamScanner

- It is shown in Fig. 4.18. Now, due to the copper ring wound on the pole shoe, the distribution of the flux is not uniform but it will be move from un-shaded part to shaded part.

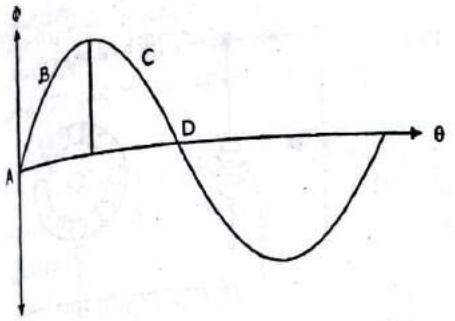


FIG. 4.18 : ALTERNATING FLUX

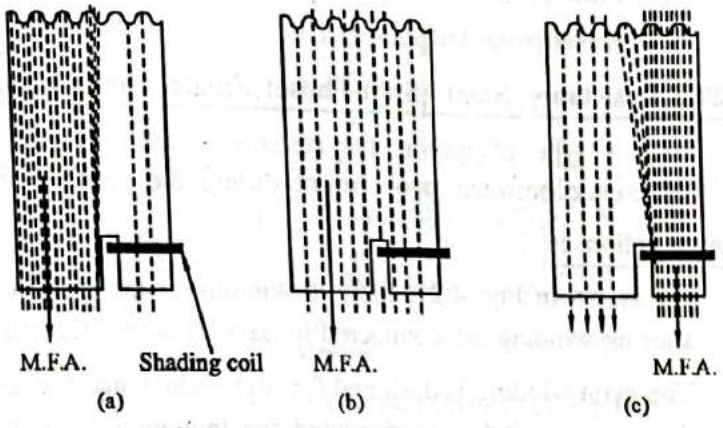


FIG. 4.19 : DISTRIBUTION OF FLUX

- Let's see, how it works;

1. During the portion A to B, the flux will change from zero to certain value. But, as the inductance of the copper ring will oppose this change, the most of the flux will pass from the un-shaded part and a small amount of the flux will pass from the shaded part. Thus, the magnetic field axis (M.F.A.) is in the un-shaded part. It is shown in Fig. 4.19(a).
2. During portion B to C, the value of the flux is approximately constant. Hence, the distribution of the flux in the shaded part is same as un-shaded part. Thus, the magnetic field axis comes into the center of the pole. It is shown in Fig. 4.19(b).
3. During the portion C to D, the flux will change from certain value to zero. But, again the inductance of the copper ring will oppose this change; the most of the flux will pass from the shaded part. Hence, the magnetic field axis (M.F.A.) is in the shaded part. It is shown in Fig. 4.19(c).

- From above, we can say that the magnetic field axis (M.F.A.) will move from the un-shaded part to shaded part. Hence, the force will be produced on the rotor and rotor will rotate.

**Torque – Speed Characteristic :**

- The torque-speed characteristic of the shaded pole single phase induction motor is shown in Fig. 4.20.

**Advantages :**

- Due to absence of centrifugal switch,
  1. Construction is very simple
  2. Mechanically strong

**Disadvantages :**

1. Poor starting torque.
2. Low power factor.
3. Efficiency is less due to high $I^2R$ copper losses.

**Applications :**

- These types of motors have very low starting torque. The various applications of the shaded pole motor are listed below;
  1. Toy Motor
  2. Tape Recorder
  3. Fan

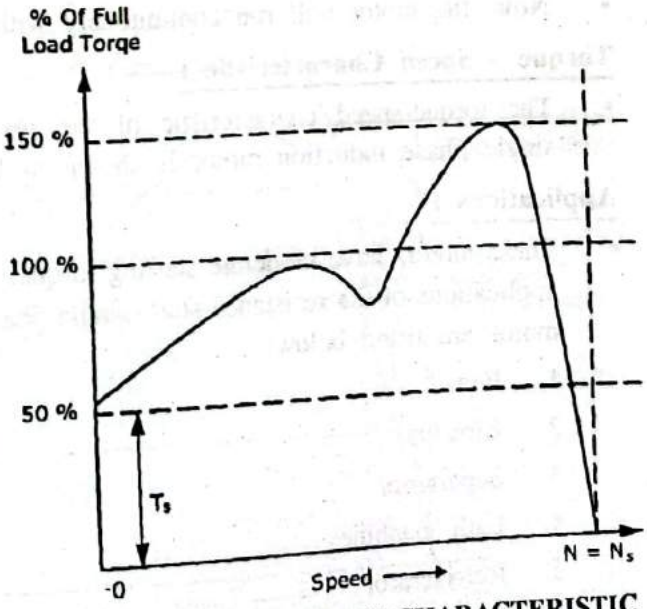


FIG. 4.20 : TORQUE – SPEED CHARACTERISTIC

Scanned with CamScanner

4. Hair Dryer
5. Film projector
6. Advertising Display etc.

### 4.20.2 Resistance Start (Split-Phase) Single Phase Induction Motor :

- In this type of motor, the resistor is used to produce the phase difference between two current during the starting period.

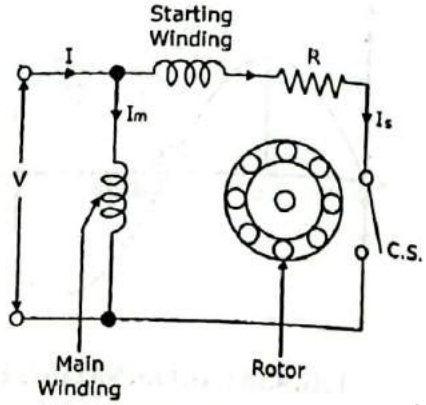


FIG. 4.21 : RESISTANCE START INDUCTION MOTOR

**Construction :**

- As shown in Fig. 4.21, the two windings, namely; main winding and starting winding are connected in parallel across the supply voltage V.
- The main winding is designed for high inductance low resistance while the starting winding is designed for low inductance high resistance.
- The resistor R and centrifugal switch is connected in series with starting winding.
- The centrifugal switch is one type of automatic mechanically operated switch which is normally close. It operates when the speed of the motor reaches up to 70% of its normal speed.

**Working :**

- When the single phase supply is given to the motor, the current flowing through the main winding lags the supply voltage by an angle $\phi_m$.
- Same way, the current flowing through the starting winding lags the supply voltage by an angle $\phi_s$.
- The vector diagram of the resistance start induction run single phase induction motor is shown in Fig. 4.22.
- Due to the phase difference $\alpha$ between two currents, the net torque will produce on the rotor and hence, the rotor will start to rotate.

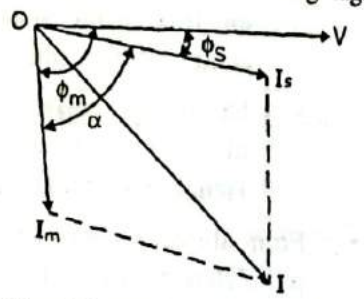


FIG. 4.22 : VECTOR DIAGRAM

- When the speed of the motor reaches up to 70% of its normal speed, the centrifugal switch will operate which will disconnect the starting winding from the circuit.
- Now, the motor will run continuously with only one winding namely; main winding.

**Torque – Speed Characteristic :**

- The torque-speed characteristic of the resistance start single phase induction motor is shown in Fig. 4.23.

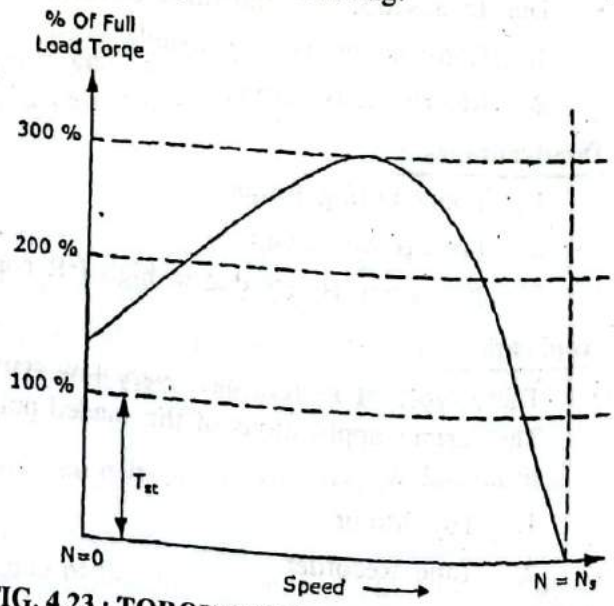


FIG. 4.23 : TORQUE SPEED CHARACTERISTIC

**Applications :**

- These motors have moderate starting torque. The various applications of the resistance start single phase induction motor are listed below;
  1. Fans
  2. Blowers
  3. Separators
  4. Lath machines
  5. Refrigerator
  6. Washing machines etc.

Scanned with CamScanner

### 4.20.3 Capacitor Start Single Phase Induction Motor :

- In this type of motor, the capacitor is used to produce the phase difference between two current during he starting period.

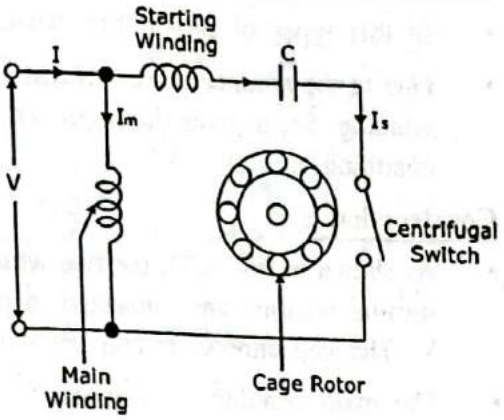


FIG. 4.24 : CAPACITOR START INDCTION MOTOR

**Construction :**

- As shown in Fig. 4.24, the two windings, namely; main winding and starting winding are connected in parallel across the supply voltage V.
- The main winding is designed for high inductance low resistance while the starting winding is designed for low inductance high resistance.
- The capacitor C and centrifugal switch is connected in series with starting winding.
- The centrifugal switch is one type of automatic mechanically operated switch which is normally close. It operates when the speed of the motor reaches up to 70% of its normal speed.

**Working :**

- When the single phase supply is given to the motor, the current flowing through the main winding lags the supply voltage by an angle $\phi_m$.
- Same way, the current flowing through the starting winding leads the supply voltage by an angle $\phi_s$ due to the presence of capacitor.
- The vector diagram of the capacitor start induction run single phase induction motor is shown in Fig. 4.25.
- Due to the phase difference $\alpha$ between two currents, the net torque will produce on the rotor and hence, the rotor will start to rotate.

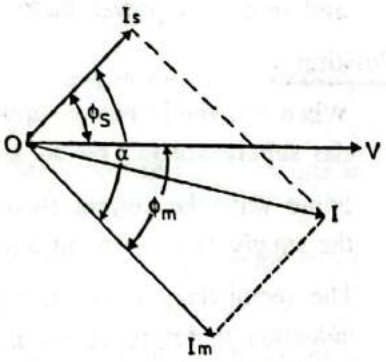


FIG. 4.25 : VECTOR DIAGRAM

- When the speed of the motor reaches up to 70% of its normal speed, the centrifugal switch will operate which disconnect the starting winding from the circuit.

**Torque – Speed Characteristic :**

- The torque-speed characteristic of the capacitor start induction motor and capacitor run single phase induction motor is shown Fig. 4.26.

**Applications :**

- These types of motors have high starting torque. Their various applications are listed below;
  1. Drilling Machines
  2. Centrifugal Pumps
  3. Flour Mills
  4. Grinders
  5. Refrigerators
  6. Air conditioner etc.

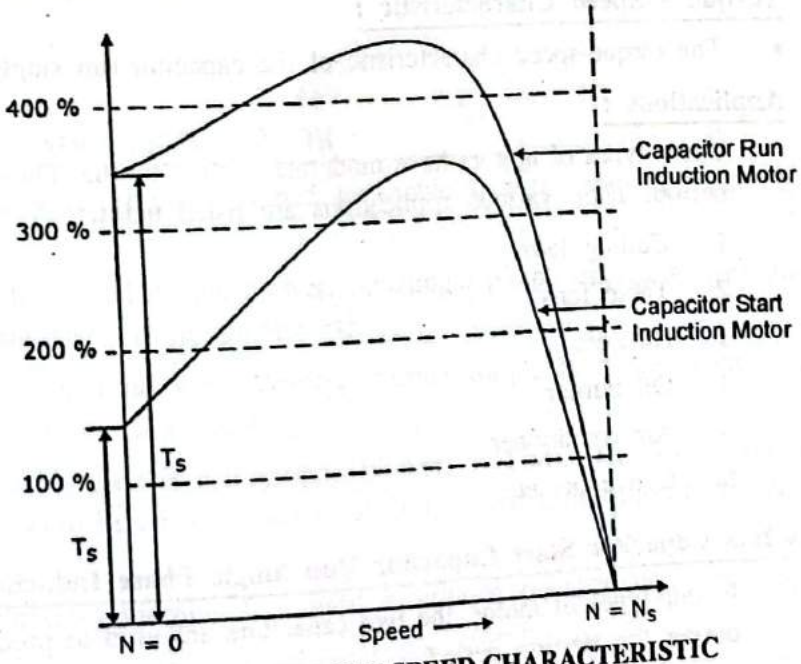


FIG. 4.26 : TORQUE SPEED CHARACTERISTIC

Scanned with CamScanner

### 4.20.4 Capacitor Run Single Phase Induction Motor :

- In this types of motor, the capacitor is used to produce the phase difference between two current.
- Due to the absence of centrifugal switch, the capacitor is continuously connected in series with the starting winding. So, it gives the improved power factor during the starting condition as well as during the running condition.

**Construction :**

- As shown in Fig. 4.27, the two windings, namely; main winding and starting winding are connected in parallel across the supply voltage V. The capacitor C is connected in series with starting winding.
- The main winding is designed for high inductance low resistance while the starting winding is designed for low inductance high resistance.
- In these types of motor, the centrifugal switch is not used. Due to the absence of centrifugal switch, the motor gives smooth operation and improved power factor during the running condition.

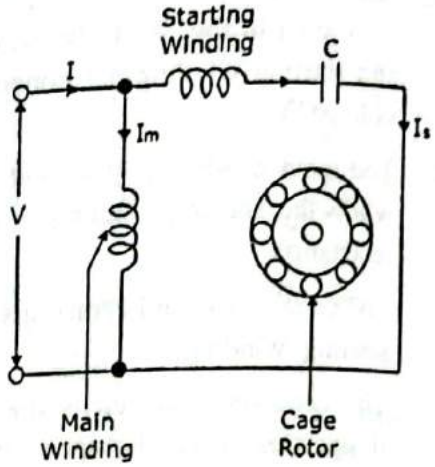


**FIG. 4.27 : CAPACITOR RUN INDUCTION MOTOR**

**Working :**

- When the single phase supply is given to the motor, the current flowing through the main winding lags the supply voltage by an angle $\phi_m$.
- Same way, the current flowing through the starting winding leads the supply voltage by an angle $\phi_s$ due to the presence of capacitor.
- The vector diagram of the capacitor start capacitor run single phase induction motor is shown in Fig. 4.28.
- Due to the phase difference $\alpha$ between two currents, the net torque will produce on the rotor and hence, the rotor will start to rotate.
- As the capacitor is continuously connected in series with the starting winding, it gives the improved power factor continuously. This type of capacitor must be of continuous rating.

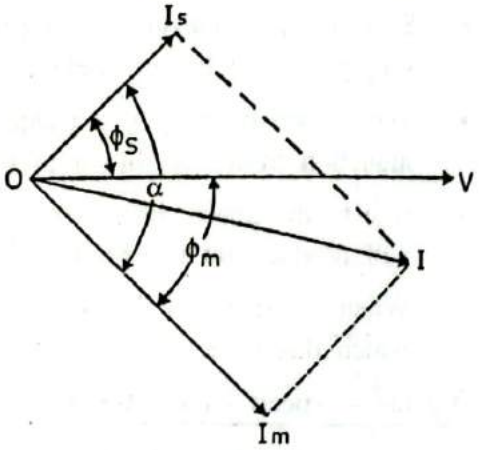


**FIG. 4.28 : VECTOR DIAGRAM**

**Torque – Speed Characteristic :**

- The torque-speed characteristic of the capacitor run single phase induction motor is shown in Fig. 4.26.

**Applications :**

- These types of motors have moderate starting torque. They give improved power factor during the running period. Their various applications are listed below;
  1. Ceiling fans
  2. Table fans
  3. Blowers
  4. Oil burner
  5. Air conditioner
  6. Conveyors etc.

### 4.20.5 Capacitor Start Capacitor Run Single Phase Induction Motor (Double Value) :

- In this types of motor, the two capacitors are used to produce the phase difference between two current during the starting period.

Scanned with CamScanner

**Construction :**

- As shown in Fig. 4.29, the two windings, main winding and starting winding are connected in parallel across the supply voltage V.
- The main winding is designed for high inductance low resistance while the starting winding is designed for low inductance high resistance.
- Two capacitors $C_1$ and $C_2$ are connected in parallel and their combination is connected in series with starting winding.
- The centrifugal switch is connected in series with capacitor $C_2$.

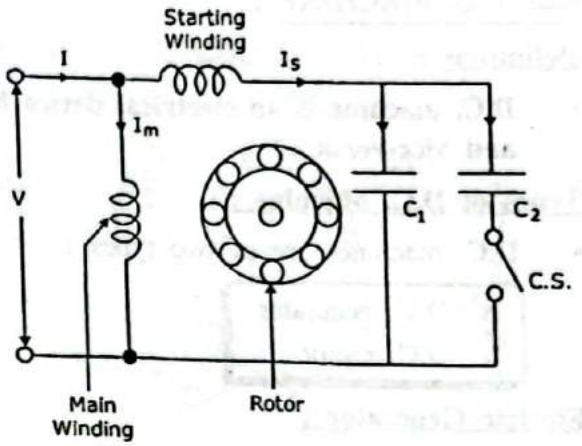


**FIG. 4.29 : CAPACITOR START CAPACITOR RUN INDUCTION MOTOR**

- The centrifugal switch is one type of automatic mechanically operated switch which is normally close. It operates when the speed of the motor reaches up to 70% of its normal speed.

**Working :**

- When the single phase supply is given to the motor, the current flowing through the main winding lags the supply voltage by an angle $\phi_m$.
- Same way, the current flowing through the starting winding leads the supply voltage by an angle $\phi_s$ due to the presence of capacitor.
- Due to the phase difference $\dot{\alpha}$ between two currents, the net torque will produce on the rotor and hence, the rotor will start to rotate.
- When the speed of the motor reaches up to 70% of its normal speed, the centrifugal switch will operate which will disconnect the capacitor $C_2$ from the circuit.

**Applications :**

- These types of motors have high starting torque. Also, they give improved power factor during the running period. Their various applications are listed below;
  1. Compressor
  2. Flour mill
  3. Mixer grinder etc.

## 4.21 APPLICATIONS OF SINGLE PHASE INDUCTION MOTOR :

1. **Shaded pole motor :** It is used in table fan, toys, hair drier, turn table, tape recorder etc. Capacity is less.
2. **Resistance start-induction motor :** It is used in fan, blower, centrifugal pimp, separators, washing machine, oil burner, lathe, duplicating machine refrigerator etc.
3. **Capacitor start-induction motor :** It is used where greater starting torque is required such as centrifugal pimp, drilling machine, domestic flour mill.
4. **Capacitor run (induction) motor :** It is used in ceiling fans, blower, oil burner etc. More over it is used where the speed of the motor is to be quickly reversed such as rheostat, induction regulators, furnace, control value etc.
5. **Capacitor start-capacitor run (induction) motor :** It is used in grinder, polisher, domestic flour mil, compressor etc.



Scanned with CamScanner

## 4.22 D.C. MACHINE :

**Definition :**

- **D.C. machine is an electrical device by which mechanical energy is converted into electrical energy and vice-versa.**

**Types of D.C. Machine :**

- D.C. machines are of two types :

1. D.C. generator
2. D.C. motor

**Electric Generator :**

- The device which converts mechanical energy into electrical energy is called electric generator (or dynamo).

**Electric Motor :**

- The device which converts electrical energy into mechanical energy is called motor.

## 4.23 WORKING PRINCIPLE OF A D.C. GENERATOR :

- D.C. generator converts mechanical energy in to electrical energy.

**Working Principle :**

- The working principle of a d.c. generator is electromagnetic induction i.e., whenever flux is cut by a conductor, an e.m.f. is induced which will cause a current to flow if the conductor circuit is closed.

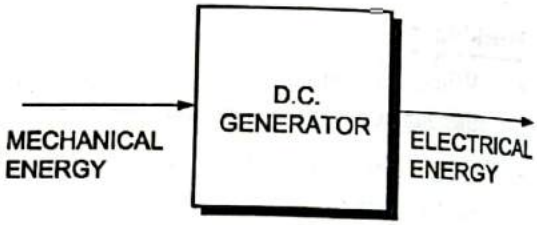


**FIG. 4.28.1 : FUNCTION OF D.C. GENERATOR**

## 4.24 PARTS OF THE D.C. MACHINE :

**GTU Questions** **January-2019**

**1.** Prepare a List of parts of a D. C. Machine. Explain any one part in detail. **[Jan. 2019, 3-Marks]**

- A D.C. machine consists of the following essential parts as shown in Fig. 4.28.2.

1. Frame or Yoke
2. Field poles and pole-shoes
3. Field coils or Field winding
4. Armature core
5. Armature windings or armature conductors
6. Commutator
7. Brushes
8. Bearings

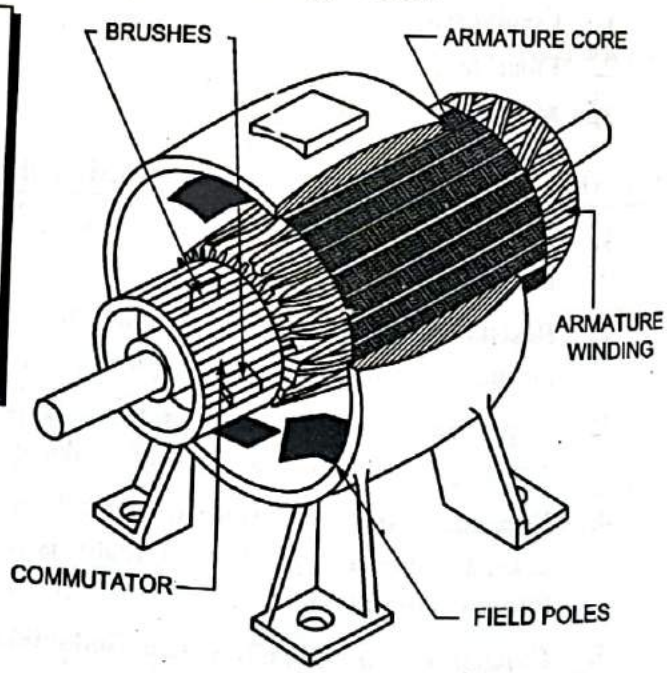


**FIG. 4.28.2**

Scanned with CamScanner

## 1. Frame or Yoke :

- The yoke or outer frame is the convering provided to a d.c. generator and it serves the following purposes.
  (1) It provides a mechanical support for the poles.
  (2) It acts as a protective cover against mechanical damage.
  (3) It provides a passage the magnetic flux produced by the poles.
- For small generators, yokes are made of cast iron.

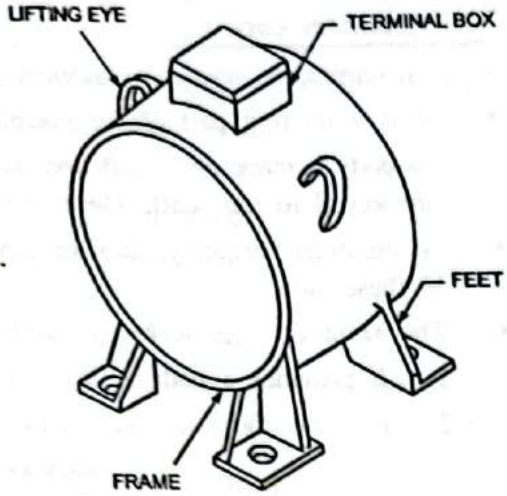


FIG. 4.28.3

## 2. Field poles and pole-shoes :

- Function of the pole is to produce the magnetic field.
- The pole shoe spreads the magnetic lines of force.
- Construction of pole is shown in Fig. 4.28.4.

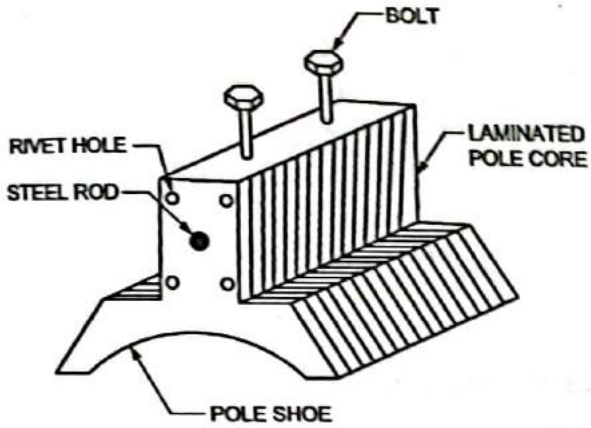


FIG. 4.28.4

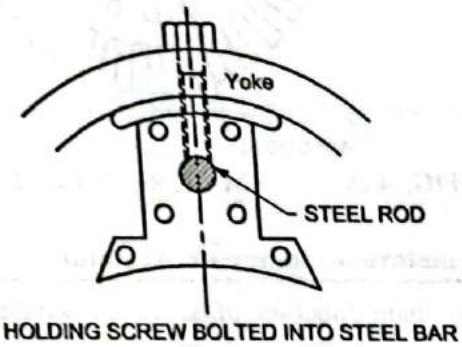


FIG. 4.28.5 : POLE CORE ASSEMBLY

## 3. Field coils or Field winding :

- The field coils are placed on pole core as shown in Fig. 4.28.6 and made up of copper wire or strips. When current passes through the coil the poles get magnetised, and produce flux which is required for generation of e.m.f.
- The field winding is either connected in series or in parallel with the armature winding.

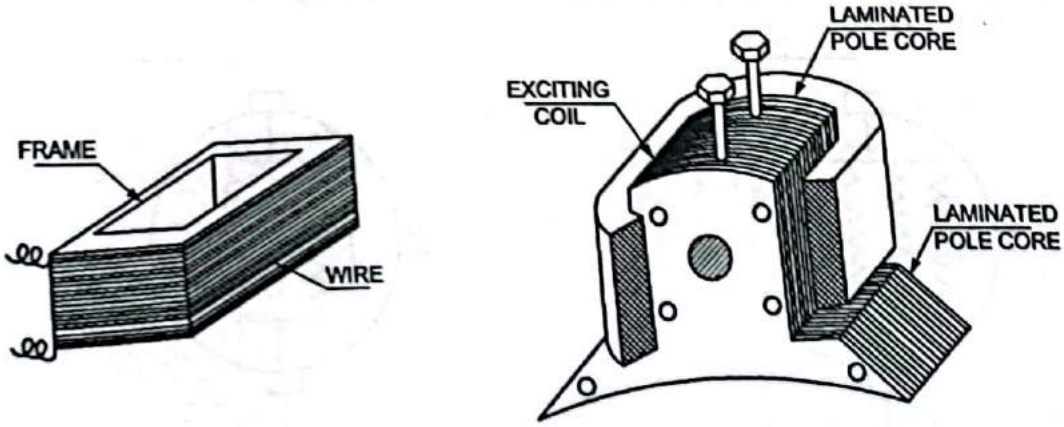


FIG. 4.28.6

Scanned with CamScanner

**4. Armature core :**

- The armature core is cylindrical in shape.
- It is a rotating part of the machine.
- Its body is made up of soft iron stampings or limitations to reduce the eddy current losses. The laminations are keyed to the shaft. These are insulated from each other by varnish.
- At the outer periphery, slots are cut as shown in Fig. 4.28.7. The armature conductors (winding) are placed in these slots.
- The armature core serves the following purposes.
  1. It provides a path of low reluctance to the magnetic flux.
  2. It house the armature conductors.

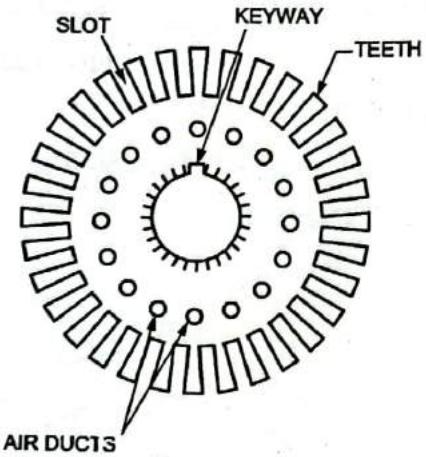


FIG. 4.28.7 : ARMATURE CORE LAMINATIONS

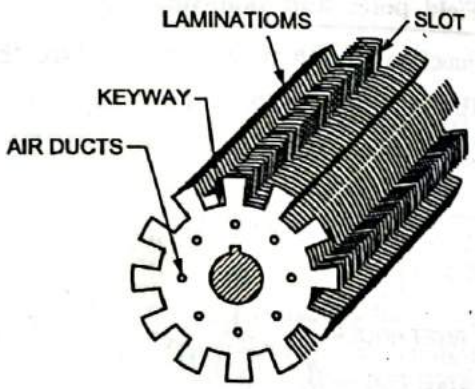


FIG. 4.28.8 : ARMATURE CORE

**5. Armature windings or Armature conductors :**

- The main function of armature winding is to produce the e.m.f. in the conductors.
- Armature winding is placed in the slots of the armature core.
- There two types of armature winding.

| |
|---|
| 1. Lap winding. |
| 2. Wave winding |

- In simplex lap winding, armature conductors are divided in to groups equal to the number of poles and the conductors in each group are connected in series. These groups are connected in parallel. Thus, in simplex lap winding, number of parallel paths is equal to the number of poles.

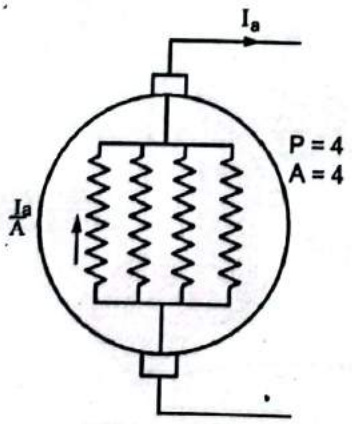


FIG. 4.28.9

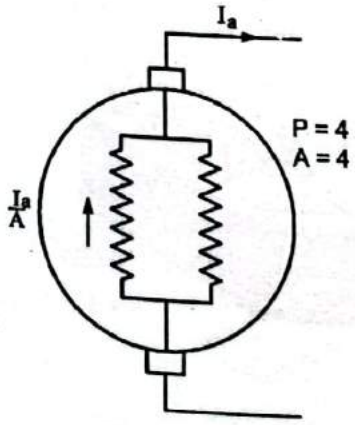


FIG. 4.28.10

Scanned with CamScanner

- In simplex wave winding, there are only two parallel paths. So in the four-pole generator with the simplex wave winding, there are two parallel paths while in simplex lap winding, there are four parallel paths in the armature winding.

## 6. Commutator :

- Function of the commutator is to convert a.c. induced e.m.f. in armature in to d.c.

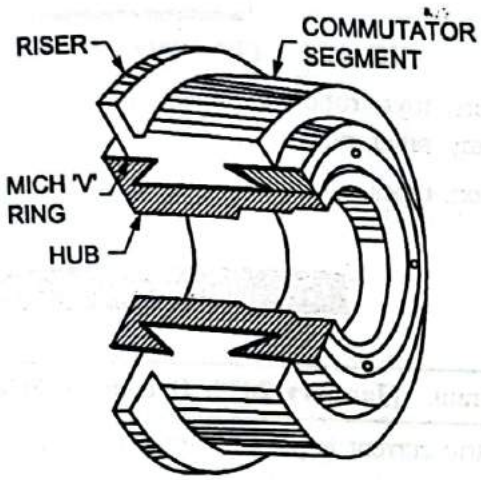


FIG. 4.28.11 : ISOMETRIC VIEW OF COMMUTATOR

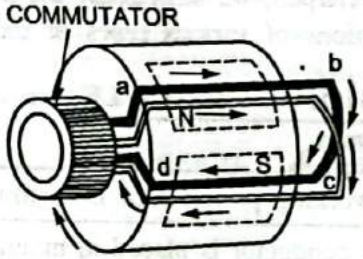


FIG. 4.28.12

- Commutator is made of copper strips separated by mica insulation.
- The strips are also insulated form the shaft with the help of mica ring. Figure 4.28.11 shows the view of the commutator.
- Commutator segment is made of copper with a riser at one end to which armature coil is connected.

## 7. Brush and brush holder :

- Function of brush is to collect the current. Brushes are made of carbon and these are placed in the brush box (or brush holder).
- Fig. 4.28.13 shows the construction of the brush and the brush holder.

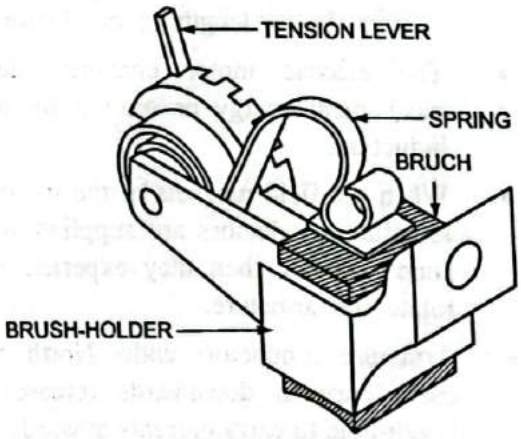


FIG. 4.28.13

## 8. Bearings :

- These are used to reduce friction and have less wear and tear.

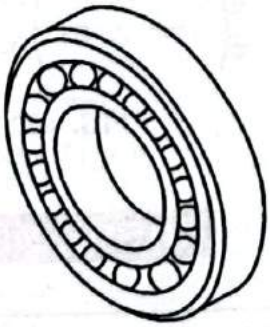

FIG. 4.28.14

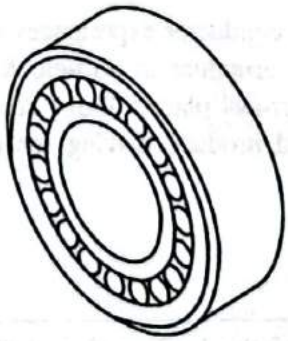

FIG. 4.28.15

Scanned with CamScanner

## 4.25 D.C. MOTOR :

- A D.C. Motor is a device which converts an electrical energy into the mechanical energy. The energy conversion process is exactly opposite to that involved in a d.c. generator.
- In a d.c. generator the input mechanical energy is supplied by a prime mover while, in a d.c. motor, input electrical energy is supplied by a d.c. source. The construction of a d.c. machine is same, whether it is a motor or a generator.

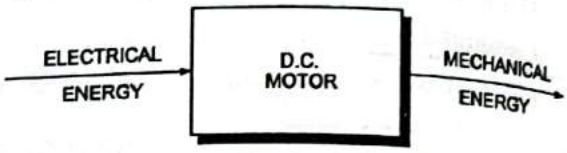


FIG. 4.30 : FUNCTION OF D.C. MOTOR

- D.C. Motors are used in VCR's, elevators, CD players, toys, robots, watches, automobiles, trains, fans, space ships, air conditioners, refrigerators and in many other places.
- In this chapter, we shall study the principle, construction, types, characteristics, starting, speed control and applications of various types of d.c. motors.

## 4.26 D.C. MOTOR PRINCIPLE :

**GTU, January-2020; December-2020**

**GTU Questions**

**1.** Write working principle of D.C. motor with new diagram. **[January-2020, December-2020, 7-Marks]**

- When a conductor is placed in magnetic field and electric current is passed through it, a mechanical force is produced on the conductor.
- This force is given by F = B.I.*l*. Newton.
- The direction of the force is given by Fleming's left hand rule.

$$F = B.I.l \text{ newtons}$$

where, B = magnetic flux density in weber/m$^2$

I = current in conductor in amperes

l = length of conductor in metres

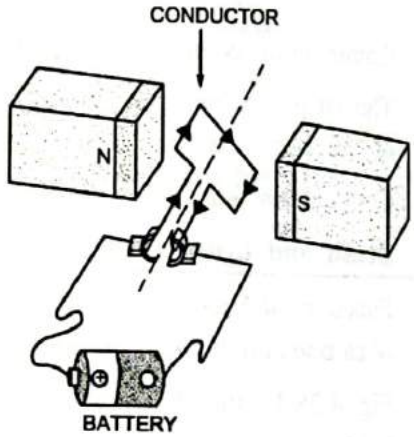


FIG. 4.31 : PRINCIPLE OF D.C. MOTOR

- The electric motor converts electrical energy into mechanical energy or motion by using electromagnetic induction.
- When the field magnets of the motor are excited and it's armature conductors are supplied with current from the supply mains, then they experience a force tending to rotate the armature.
- Armature conductors under North pole are assumed to carry currents downwards (crosses) and those under South-pole to carry currents upwards (dots). The direction of this force is given by *Fleming's Left Hand Rule* (also known as motor rule).
- It is seen that each conductor experiences a force *F* which tends to rotate the armature in anti-clock wise direction as shown by the arrows placed above conductors. These forces combine and produce driving torque to keep the armature rotating.

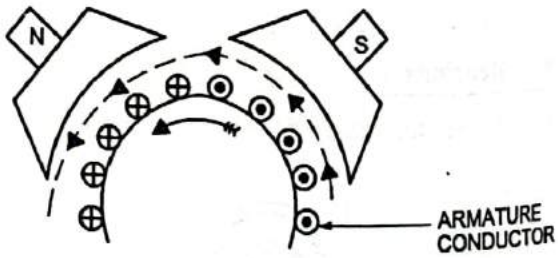


FIG. 4.32

## 4.27 BACK EMF :

**GTU, May-2019; December-2020**

**GTU Questions**

**1.** State significance of the back emf in DC motor. **[May-2019, December-2020, 3-Marks]**

Scanned with CamScanner

- When armature of the d.c. motor is given supply, the armature rotates. While rotating, the conductors cut the magnetic field so emf is induced in the conductors. The direction of this emf can be found by applying the Fleming's right hand rule. The direction of this induced emf is opposite to that of the applied voltage. So, it is called back emf. ($E_b$).
- Because of their opposing direction, it is called back or counter e.m.f.
- The magnitude of this back e.m.f. is given by the expression

i.e. $$E_b = \frac{\phi ZN}{60} \times \frac{P}{A} \text{ volts}$$

where, $E_b$ = Back e.m.f. in volts

$\phi$ = Flux/pole in webers

Z = Total number of armature conductors

N = Speed of the motor in r.p.m.

P = Number of poles

A = Number of parallel paths

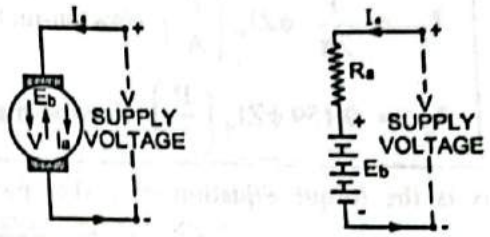


(a) Back e.m.f. in a d.c. motor (b) Equivalent Circuit

FIG. 4.33

## 4.28 TORQUE EQUATION OF A D.C. MOTOR :

- **Torque :** It is the turning moment of force about an axis. It is product of force and radius at which the force acts.
- Let us suppose,

  $r$ = Radius of armature (m)

  F = Force (Newton)

  N = Speed of armature (rpm)

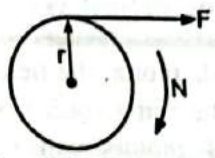


FIG. 4.34 : TORQUE PRODUCED BY THE ARMATURE

- When armature rotates through one revolution, it cuts the distance of $2\pi r$ and for that the time taken is $\frac{60}{N}$ seconds.
- Work done = Force × Distance

  $= F \times 2\pi r$

  But, $F \times r = T$

  Work done $= 2\pi T$ Newton-metre

  Power = Rate of doing work

  $$\text{Power} = \frac{\text{work done}}{\text{time}} = \frac{2\pi T}{\frac{60}{N}}$$

  $$\therefore \quad \text{Power} = \frac{2\pi NT}{60}$$

  Now, power developed in motor $= E_b I_a$

  So, $$E_b I_a = \frac{2\pi NT}{60}$$

  So armature torque ($T_a$) is

  $$\therefore \quad T_a = \frac{1}{2\pi N} E_b I_a 60$$

  But, $$E_b = \frac{\Phi ZNP}{60\,A}$$

Scanned with CamScanner

So, $T_a = \frac{1}{2\pi N}\left(\frac{\Phi ZNP}{60\,A}\right) I_a\, 60$

$$= \frac{1}{2\pi}\left(\frac{\Phi ZP}{A}\right) I_a$$

$$T_a = \frac{1}{2\pi} \cdot \phi Z I_a \left(\frac{P}{A}\right) \text{ Newton-metre}$$

$$T_a = 0.159\, \phi Z I_a \left(\frac{P}{A}\right) \text{ Newton-metre}$$

- This is the torque equation of a d.c. motor

## 4.29 CLASSIFICATION OF D.C. MOTORS :

GTU, May-2019

**GTU Questions**

**1. Classify and compare various DC motor.** **[May-2019, 4-Marks]**

- There are two types of d.c. motors.

1. Self excited D.C. motor
2. Separately excited D.C. motor

- In self excited dc motor, the field winding is excited by the same source of supply. These types of motors can be further classified as shunt, series and compound. Compound motors can be further classified as differential and cumulative. Differential and cumulative motors can be further classified as long shunt and short shunt. In summary,
- Separately exited dc motors is one in which field is excited by a separate source of supply. These are utilized in feedback control systems where control of the armature voltage over a wide range is required.

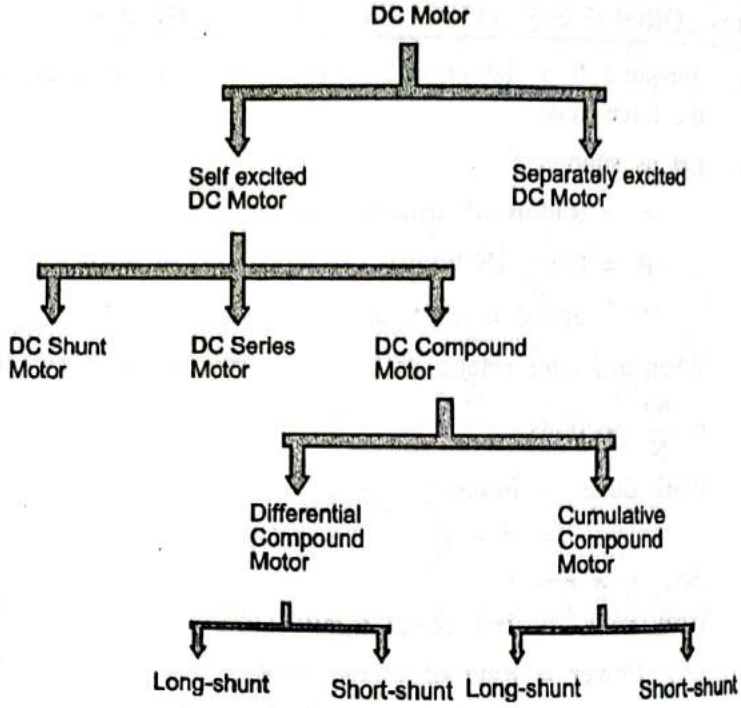


**FIG. 4.35 : TYPES OF D.C. MOTORS**

**Syllabus Topic :** Construction and working of separately excited D.C. Motor

## 4.30 SEPARATELY EXCITED DC MOTOR :

**Working Principle :**

- The working principle of separately excited DC motor is, when a current-carrying conductor is placed in a magnetic field, it experiences a mechanical force.
- The direction of mechanical force is given by Fleming's Left-hand Rule and its magnitude is given by F = BIL Newton.

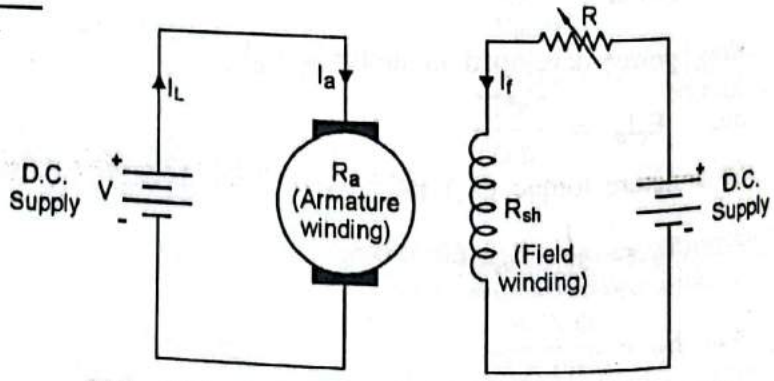


**FIG. 4.36 : SEPARATELY EXCITED DC MOTOR**

Scanned with CamScanner

- In a separately excited machine the field winding is independent of the armature winding. Separately excited DC motor the supply is given separately to the field and armature windings.
- The armature and field winding voltage loop equations are.

**Equations of voltage, current and power for separately excited DC motors :**

- In a separately excited motor, armature and field windings are excited form two different dc supply voltages.
  Armature current $I_a$ = Line current = $I_L$
- Back emf developed, $E_b = V - I_a R_a$ + brush drop
  where, V is the supply voltage
  $R_a$ is the armature resistance.
- Power drawn from main supply, P = VI

## 4.31 CHARACTERISTICS OF SEPARATELY EXCITED D.C. MOTORS :

- The performance of a separately excited d.c., motor can be judged from its characteristic curves known as ***Motor characteristics***.
- The characteristic curves of a motor of a are the curves which shows the relation between the following quantities.

**1. Torque and Armature current characteristics ($T_a/I_a$ characteristics) :**

- This curve gives the relation between the torque developed in the armature, ($T_a$) and armature current, ($I_a$).
- It is also known as *electrical characteristics*.

**2. Speed and Armature current characteristics ($N/I_a$ characteristics) :**

- This curve gives the relation between the speed N and the armature current, $I_a$.
- It is also known as *speed characteristics*.

**3. Speed and Torque characteristics (N/Ta characteristics) :**

- It is the curve which gives relation between speed, N and armature torque, $T_a$.
- It is also known as *mechanical characteristics*.
- These characteristics plays a very important role in selection of motor for particular application.

### 4.31.1 Torque – Armature current Characteristics :

- It is the graphical relation between the torque and the armature current.
- In separately excited d.c. motor, $T \alpha \Phi I_a$
- Now for the separately excited d.c. motor, flux is almost constant so $T \alpha \Phi I_a$. The characteristic is linear.

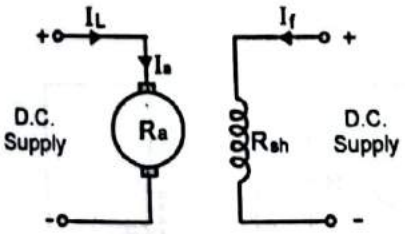


**FIG. 4.37 : SEPARATELY EXCITED D.C. MOTOR**

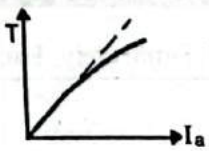


**FIG. 4.38 : TORQUE – ARMATURE CURRENT CHARACTERISTICS OF SEPARATELY EXCITED D.C. MOTOR**

- However when the load increases, the flux decreases slightly due to the armature reaction so the increase in the torque is less and the curve slightly bends.
- Shaft torque is less than the developed torque.



Scanned with CamScanner

### 4.31.2 Speed (N) and the armature current ($I_a$) Characteristics and Speed (N) and torque (T) Characteristics :

- In separately excited d.c. motor,

$$V = E_b + I_a R_a$$

$$\boxed{\therefore \; I_a = \frac{V - E_b}{R_a}}$$

- Armature has to draw more current as the load on the motor increases. Now V and $R_a$ remain constant. So the armature current can increase only when there is decrease in the back emf. And $E_b \; \alpha \; \Phi N$. So either N or $\Phi$ should decrease to cause decrease in $E_b$.

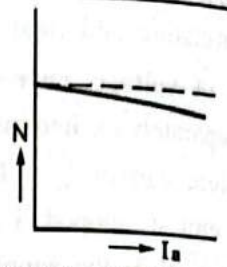


FIG. 4.39(a) : SPEED CURRENT CHARACTERISTIC OF SEPARATELY EXCITED D.C. MOTOR

- In separately excited d.c. motor, the flux remains almost constant.

$$\boxed{E_b \; \alpha \; \Phi N \text{ so } E_b \; \alpha \; N}$$

- So the $E_b$ can decrease only when the speed N falls. Thus with the increase in $I_a$ there is decrease in speed $E_b$. Of course, the falls in speed is less as the flux decreases slightly due to the armature reaction.

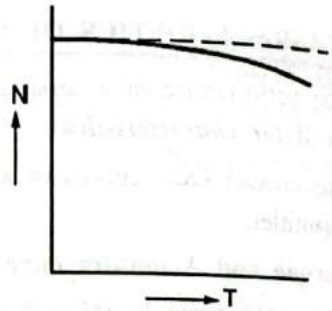


FIG. 4.39(b) : SPEED TORQUE OF SEPARATELY EXCITED D.C. MOTOR

- Fig. 4.39(a) shows the speed-current and Fig. 4.39(b) shows the speed-torque characteristic of separately excited d.c. motor.

## 4.32 SPEED CONTROL OF SEPARATELY EXCITED D.C. MOTOR :

- In separately excited d.c. motor,

$$V = E_b + I_a R_a$$

and $E_b \; \alpha \; \Phi N$

$$V = K \Phi N + I_a R_a$$

$$K \Phi N = V - I_a R_a$$

$$\boxed{N = \frac{V - I_a R_a}{K \Phi}} \quad \text{... (i)}$$

- From equation (i), it is seen that, the speed control of separately excited d.c. motor can be done by the following three ways.

1. By connecting resistance in the armature circuit
2. By connecting resistance in the field circuit
3. By controlling the voltage applied to the armature

### 4.32.1 Speed Control of Separately Excited D.C. Motor :

**1. Armature control :**

- In this method, a variable resistor (R) is connected in series with the armature so there occurs the voltage drop across the resistor and the voltage available to the armature decreases. This reduces the speed of the motor.
- The current carrying capacity of the resistor should be enough as the full load armature current flows through it.

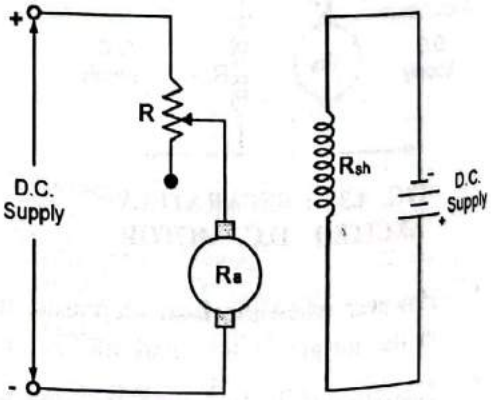


FIG. 4.40 : ARMATURE CONTROL

Scanned with CamScanner

- Fig. 4.41 shows the speed V/S armature voltage characteristic. It is a linear curve. As the armature voltage is increased, the speed increases.
- Fig. 4.42 shows the speed V/S armature current characteristics. When no resistance is connected in the armature circuit, the curve marked normal is obtained.
- When resistance is connected, the curve marked $R_1$ is obtained. The speed is less. Other two curves for resistances $R_2$ and $R_3$ are shown and $R_3 > R_2 > R_1$.

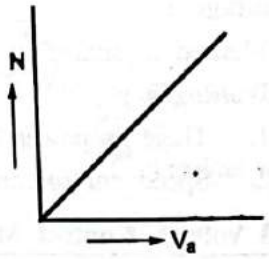


FIG. 4.41 : SPEED-ARMATURE VOLTAGE CHARACTERISTIC

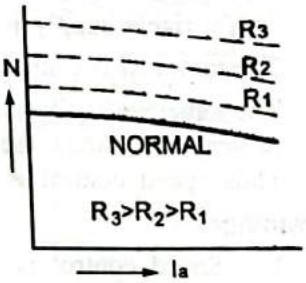


FIG. 4.42 : SPEED-ARMATURE CURRENT CHARACTERISTIC

**Advantage :**

Method is simple

**Disadvantages :**

1. Speed control only below normal is possible.
2. There is power loss in the resistance.
3. Efficiency decreases.
4. The output power reduces.

### 4.32.2 Field Control :

- In this method, a variable resistor (R) is connected in series with the field winding. This reduces the field current, which reduces the flux and hence the speed increases.
- Fig. 4.44 shows the Speed V/S field current characteristic. It is seen that the speed is more for less value of the field current.
- Fig. 4.45 shows the speed V/S armature current characteristics. Full line curve is obtained when no resistance is connected in the field circuit. Curves, when resistances are connected are shown by the dotted curves. Different curves are for different values of resistance connected in the field circuit. $R_3 > R_2 > R_1$.

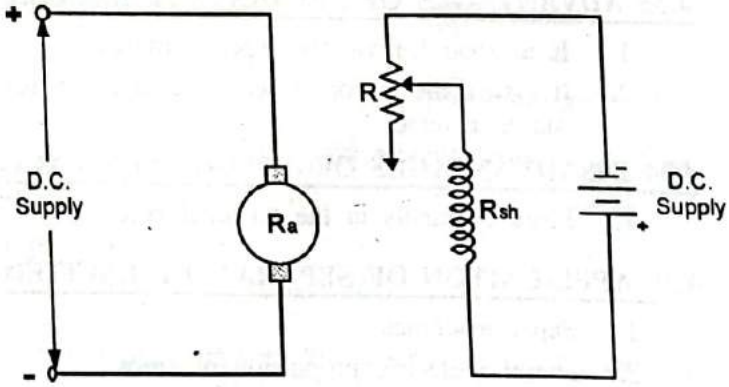


FIG. 4.43 : FIELD CONTROL

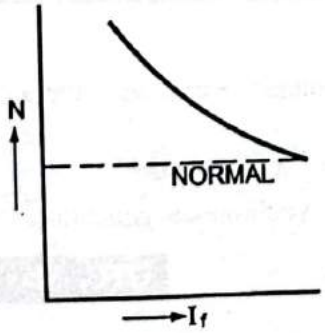


FIG. 4.44 : SPEED-FIELD CURRENT CHARACTERISTIC

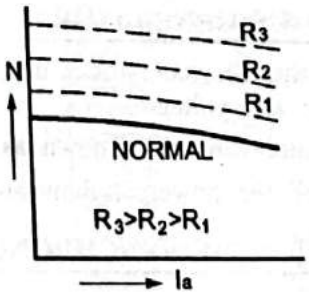


FIG. 4.45 : SPEED-ARMATURE CURRENT CHARACTERISTIC

Scanned with CamScanner

**Advantage :**

Method is simple

**Disadvantages :**

1. There is power loss in the resistor.
2. Speed control only above the normal is available. This means that the speed cannot be decreased.

### 4.32.3 Voltage Control Method :

- This system is very sensitive. As shown in Fig. 4.46, here the separately excited d.c. motor M whose speed control is required. It is connected to D.C. Generator, while its field is connected separately to fixed d.c. supply. The basic principle used it is, by varying supply voltage any desired speed can be obtained.
- The variable supply is get by generator - motor set. Here motor is either Induction motor or D.C. motor.
- The motor M is connected to fixed d.c. supply and runs at almost constant speed. It is coupled with generator.
- The generated voltage is varied by field regulator which is connected as shown if Figure. As field current of generator varies, the generated emf changed and hence supply of main motor in varies and hence speed. Thus speed control is achieved.

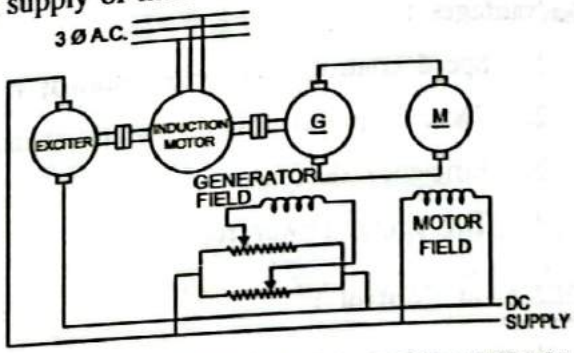


FIG. 4.46 : VOLTAGE CONTROL METHOD

**Advantages :**

1. Speed control is smooth.
2. Range of the control is wide.
3. Direction of rotation can be reversed.

**Disadvantages :**

1. Initial cost is high.
2. The equipments occupy large floor space.
3. Maintenance cost is high.

## 4.33 ADVANTAGES OF SEPARATELY EXCITED D.C. MOTOR :

1. It is good for variable speed control.
2. It makes the motor easier to reverse. By reversing the polarity of the field supply, the motor will run in reverse.

## 4.34 DISADVANTAGES OF SEPARATELY EXCITED D.C. MOTOR :

1. More terminals in the terminal box.

## 4.35 APPLICAITON OF SEPARATELY EXCITED D.C. MOTOR :

1. Paper machines
2. Diesel - electric propulsion of ships.
3. Steel rolling mills etc.

**Syllabus Topic : Construction and Working of Synchronous Generator**

## 4.36 SYNCHRONOUS GENERATOR :

- We know that the d.c. generator is used to generate the d.c. voltage. Same way, the a.c. generator is used to generate the a.c. voltage.
- The a.c. generators are also known as synchronous generator or alternator.
- Now a days, all the power stations are consists of 3-phase synchronous generator.

## 4.37 CONSTRUCTION OF SYNCHRONOUS GENERATOR :

**GTU, May-2019; Dec. 2020**

**GTU Questions**

1. Explain construction of synchronous generator with diagram. **[May-2019, 7-Marks]**
2. Explain construction of Alternator with neat diagram. **[December-2020, 7-Marks]**

Scanned with CamScanner

- Main parts of this type of synchronous generator are as follows :

**1. Stator frame :**

- Function of the stator frame is to give support to the armature core. Frame is made by bending and welding the mild steel plates.

**2. Stator core :**

- Stator core is made by keeping the silicon steel laminations together. Slots are cut on the inside periphery. Hysteresis loss is reduced due to the use of silicon steel and eddy current loss is reduced due to the use of laminated core instead of solid core.

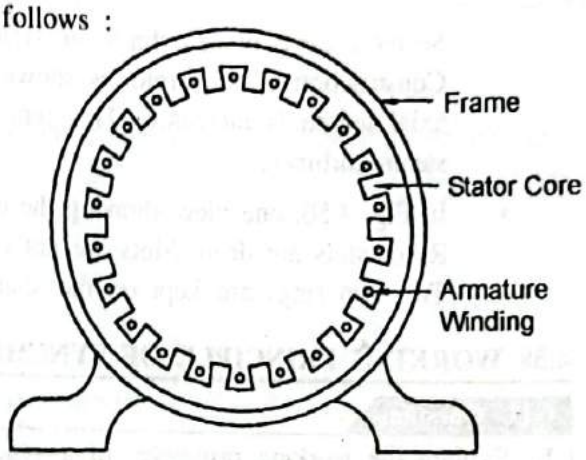


**FIG. 4.47 : STATOR OF SYNCHRONOUS GENERATOR**

**3. Armature winding :**

- Winding made of copper conductors is placed in the slots of the armature core. This winding is connected in star or delta. Leads of this winding are taken to the terminal box.

**4. Rotor :**

- Rotors are of two types :

| |
|---|
| (1) Salient pole rotor and |
| (2) Cylindrical rotor |

**(1) Salient pole rotor :**

- In this, poles are fitted on the wheel made of steel having good magnetic properties. Field winding is wound over the poles. In this the number of poles are four or more.

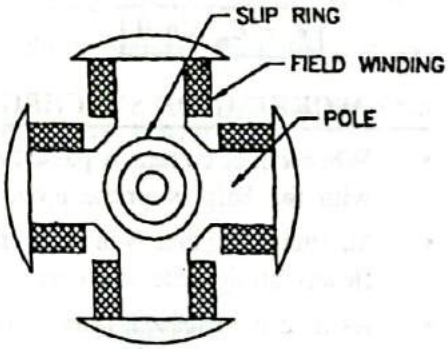


**FIG. 4.48 : SALIENT POLE ROTOR**

- Diameter of rotor is more and the axial length is small. This type of rotor construction is used for the alternators driven by low speed water turbine and diesel engine.
- In Fig. 4.48 view of a 4 pole salient pole type rotor is shown.

**(2) Cylindrical rotor :**

- Two poles are required when the speed of the prime mover is very high such as steam turbine. For this, projected type poles can not be used because due to high speed, windage losses are increased.

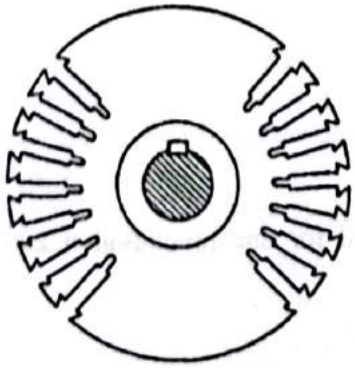

**FIG. 4.49 : CYLINDRICAL ROTOR WITHOUT WINDING**

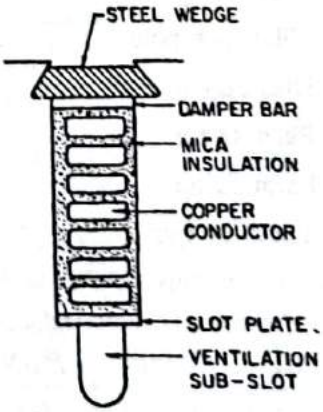


**FIG. 4.50 : WINDING IN ONE SLOT OF CYLINDRICAL ROTOR**

Scanned with CamScanner

- So the rotor is made cylindrical. Hence the air resistance is reduced and wastage of power is reduced. Construction of such rotor is shown in Fig. 4.49. In this the diameter of rotor becomes less so the axial length is increased. This type of rotor construction is used for the alternators driven by the steam turbines.
- In Fig. 4.50, one view showing the construction of cylindrical rotor is shown. Winding is not shown. Rotor slots are deep. Slots are not cut on the whole periphery. These are cut only in some portion. Two slip rings are kept on the shaft.

## 4.38 WORKING PRINCIPLE OF SYNCHRONOUS GENERATOR : GTU, January-2019

**GTU Questions**

1. Explain the working principles of a synchronous generator and a synchronous motor. **[January-2019, 7-Marks]**

- Alternating emf is produced with the help of synchronous generator.
- When coil is rotated in magnetic field, there is change in the flux linkage.
- As a result, emf is induced in the coil.
- This emf is of alternating type and it is given by

$$e = E_m \sin \theta$$

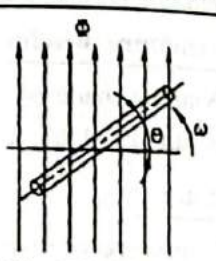


**FIG. 4.51 : PRODUCTION OF ALTERNATING EMF**

## 4.39 WORKING OF SYNCHRONOUS GENERATOR :

- When direct current is passed through the field winding, magnetic field is produced. When rotor is rotated with the help of prime mover, magnetic field is cut by the armature conductors.
- So alternating emf is induced in the armature conductors. When the armature is connected with load, current flows through the armature.
- As load is increased, prime mover provides more mechanical energy. Thus mechanical energy is converted in to electrical energy by synchronous generator.

## 4.40 EMF EQUATION OF SYNCHRONOUS GENERATOR :

- Equation of emf induced in armature winding can be obtained as follows :

Let,

$Z_p$ = Number of conductors connected in series per phase

$Z_p = 2\ T_p$ where $T_p$ = turns per phase

$P$ = Number of poles

$f$ = Frequency

$\Phi$ = Flux per pole

$K_d$ = Distribution factor and

$K_p$ = Pitch factor

$K_f$ = Form factor

$N$ = Speed in rpm

- One conductor cuts flux of $P\Phi$ Weber in one revolution and for one revolution it takes time of $60/N$ seconds. So the average emf induced in one conductor is

$$\frac{\text{Flux cut}}{\text{Time taken}} = \frac{P\Phi}{60/N} = \frac{P\Phi N}{60} \text{ volt} \quad \text{... (1)}$$

- But $N = \dfrac{120\ f}{P}$

Scanned with CamScanner

$\therefore$ Average emf per conductor $= \dfrac{P\,\Phi}{60} \cdot \dfrac{120\,f}{P} = 2\,\Phi\,f$ ... (2)

- There are $Z_p = 2\,T_p$ conductors connected in series in a phase. So average emf per phase will be

$$2\,\Phi\,f\,Z_p = 2\,\Phi\,f\,2\,T_p = 4\,\Phi\,f\,T_p \quad \text{... (3)}$$

- RMS value = average value × Form factor

$$= 4\,\Phi\,f\,T_p \times 1.11$$

$$\boxed{E_p = 4.44\,\Phi\,f\,T_p \text{ volt}} \quad \text{... (4)}$$

$K_p$ and $K_d$ are the pitch factor and the distribution factors respectively

$\therefore$ Net emf per phase $\boxed{E_p = K_p\,K_d\,4.44\,\Phi\,f\,T_p}$

- If the armature is connected in star, line voltage $E_L = \sqrt{3}\,E_p$ and if it is connected in delta, line voltage $E_L = E_P$

## 4.41 DISTRIBUTED WINDING AND CONCENTRATED WINDING :

- In synchronous generator the armature winding is kept distributed instead of concentrated type.
- Suppose there are 36 coils in a three–phase synchronous generator. Then there will be 12 coils per phase.
- If all these 12 coils of a phase are kept in one slot, then it is called the concentrated winding (in fact it is not done so).
- But the coils are distributed in different slots and it is called the distributed winding.
- For example in a 36 slot three phase machine, slots per pole per phase will be $\dfrac{36}{4 \times 3} = 3$.

Coil pitch = Pole pitch = $\dfrac{36}{4} = 9$

- Then $R$ phase will occupy the following slots.
- 1, 2, 3, 10, 11, 12, 19, 20, 21 and 28, 29, 30. Similarly winding for the Y phase and B phase will be distributed.

## 4.42 DISTRIBUTION FACTOR :

- This is also known as the breadth factor or winding factor or spread factor. It is expressed as $K_d$.
- In alternator all the coils of a phase are not kept in one slot of the armature but are distributed in various slots.
- So voltage between the two adjacent coils does not remain in phase but there is some phase angle between them. As a result the emf induced in a phase is reduced.
- Distribution factor $K_d = \dfrac{\text{Emf of distributed winding}}{\text{Emf of concentrated winding}}$

$$= \frac{\text{Vector sum}}{\text{Arithmatical sum}}$$

- Vector sum = AE = AF + FE = 2AF = $2\,r \sin \dfrac{m\beta}{2}$

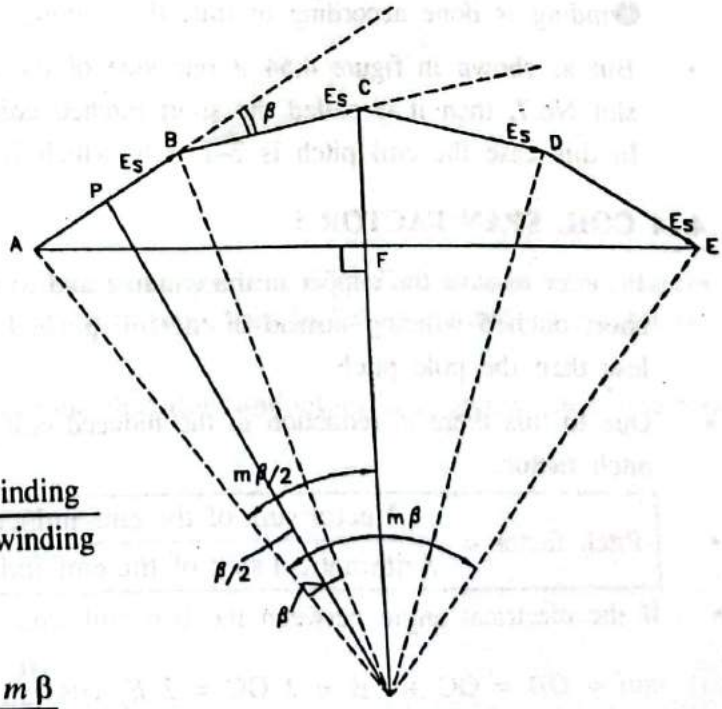


FIG. 4.52 : DISTRIBUTION FACTOR

Scanned with CamScanner

- Now $E_s$ = AB = AP + PB = 2AP = $2\ r \sin \frac{\beta}{2}$
- And arithmetical sum = $m\ E_s$ where $m$ = slots per pole per phase
- So the arithmetical sum = $m\ 2\ r \sin \frac{\beta}{2}$
- Distribution factor $K_d = \dfrac{2\ r \sin \frac{m\beta}{2}}{m\ 2\ r \sin \frac{\beta}{2}} = \dfrac{\sin \frac{m\beta}{2}}{m \sin \frac{\beta}{2}}$

$$\therefore \quad \boxed{\text{Distribution factor } K_d = \frac{\sin \frac{m\beta}{2}}{m \sin \frac{\beta}{2}}}$$

## 4.43 FULL PITCH WINDING AND SHORT PITCH WINDING :

- In full pitch winding coil span or coil pitch is equal to the pole pitch. Whereas in short pitch winding coil pitch is one or two slots less than the pole pitch.

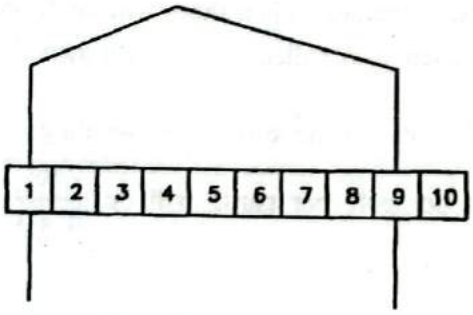


Fig. 4.53 : Full pitched coil

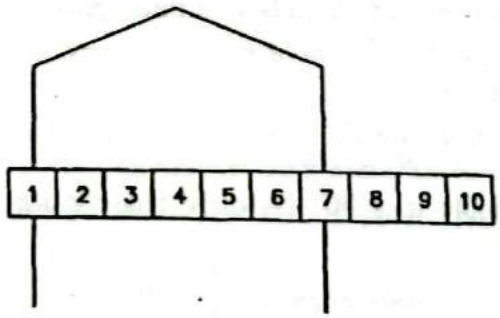


Fig. 4.54 Short pitched coil)

- Suppose the pole pitch is 8. As shown in figure 4.53 if one side of the coil is placed in the slot No. 1 and the other side is kept in slot No. 9, then the coil pitch becomes equal to the pole pitch. So if the winding is done according to this, the winding is called the full pitched winding.
- But as shown in figure 4.54 if one side of the coil is kept in slot No.1 and the other side is kept in slot No.7, then it is called the short pitched coil and the winding is called the short pitched winding. In this case the coil pitch is 7–1 = 6, which is two slots less than the pole pitch.

## 4.44 COIL SPAN FACTOR :

- In order to save the copper in the winding and to make the emf sinusoidal, the armature winding is made short pitched winding instead of the full pitched winding, i.e. the coil pitch is taken one or two slots less than the pole pitch.
- Due to this there is reduction in the induced emf. This decrease is indicated by the coil span factor or pitch factor.
- $$\boxed{\text{Pitch factor} = \frac{\text{Vector sum of the emf induced in the two coil sides}}{\text{Arithmatical sum of the emf induced in the two coil sides}}}$$
- If the electrical angle between the two coil sides is $\alpha^o$ less than $180^o$, the resultant

emf = OB = OC + CB = 2 OC = $2\ E_s \cos \frac{\alpha}{2}$

Scanned with CamScanner

- Arithmatical sum = 2 $E_s$

$$K_p = \frac{2\,E_s \cos\frac{\alpha}{2}}{2\,E_s} = \cos\frac{\alpha}{2}$$

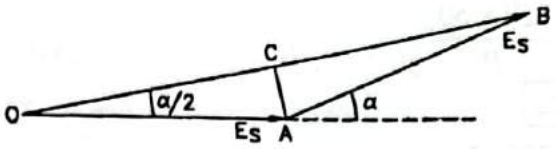


FIG. 4.55 : COIL SPAN FACTOR

**Example-4.4 :**

**There are 144 slots in a 3–phase, 16–pole, 50 Hz., star connected alternator. There are 4 conductors in each slot and all the conductors in a phase are connected in series. Coil span is 150° electrical and the flux per pole is 0.05 Weber sinusoidallly distributed. Calculate the emf induced per phase.**

***Solution :***

$P = 16$, $f = 50$, Star, Slots = 144, $\Phi = 0.05$ Wb,

4 conductors per slot, Coil span = 150° electrical, $E_p = ?$

$$\text{Turns per phase} = \frac{\text{Slots} \times \text{conductors per slot}}{2 \times \text{phase}}$$

$$= \frac{144 \times 4}{2 \times 3} = 96$$

Coil span 150° $\therefore\ \alpha = 180 - 150 = 30$

$$\therefore\ \text{Pitch factor } K_p = \cos\frac{\alpha}{2} = \cos\frac{30}{2} = 0.966$$

$$m = \frac{\text{Slots}}{\text{Pole} \times \text{Phase}} = \frac{144}{16 \times 3} = 3$$

$$\beta = \frac{180}{\text{Slot / Pole}} = \frac{180}{144 / 16} = 20^\circ$$

$$\text{Distribution factor } K_p = \frac{\sin\frac{m\beta}{2}}{m\sin\frac{\beta}{2}} = \frac{\sin\frac{3 \times 20}{2}}{3\sin\frac{20}{2}} = \frac{0.5}{3 \times 0.1736} = 0.96$$

$$E_p = 4.44\ K_p\ K_d\ \Phi\ f\ T_p$$

$$= 4.44 \times 0.966 \times 0.96 \times 0.05 \times 50 \times 96$$

$$= \boxed{988\ \text{V}}$$

**Example-4.5 :**

**In a three–phase star connected alternator it is necessary to generate 3600 line voltage at frequency of 50 Hz. by rotating it at 500 rpm. There are 3 slots per pole per phase in the stator and 10 conductors per slot. Calculate the following.**

**(1) Number of poles (2) Useful flux per pole. Assume that the conductors in a phase are connected in series and the winding is the full pitch winding.**

***Solution :***

Star, $N = 500$, $E_L = 3600$, $f = 50$, $K_p = 1$

Slots per pole per phase = $m = 3$

$P = ?$ $\Phi = ?$

$$N = \frac{120\ f}{P}$$



Scanned with CamScanner

$$\therefore \quad 50 = \frac{120 \times 50}{P}$$

$$\therefore \quad \boxed{P = 12} \qquad \text{... (1)}$$

$$E_L = 3600 \text{ V}$$

$$\therefore \quad E_P = \frac{3600}{\sqrt{3}} = 2078 \text{ V}$$

Number of slots = (slots/pole/phase) × pole × phase

$$= 3 \times 12 \times 3$$
$$= 108$$

Number of conductors = 108 × 10 = 1080

$$\text{Turns per phase} = T_p = \frac{1080}{2 \times 3} = 180$$

$$m = 3$$

$$\beta = \frac{180}{\text{slots/pole}} = \frac{180}{108/12} = 20^\circ$$

$$\text{Distribution factor } K_d = \frac{\sin\frac{m\beta}{2}}{m\sin\frac{\beta}{2}} = \frac{\sin\frac{3 \times 20}{2}}{3\sin\frac{20}{2}} = \frac{0.5}{3 \times 0.1736} = 0.96$$

$$E_p = 4.44\ K_p\ K_d\ \Phi\ f\ T_p$$

$$2078 = 4.44 \times 1 \times 0.96 \times \Phi \times 50 \times 180$$

$$\Phi = \frac{2078}{4.44 \times 0.96 \times 50 \times 180}$$

$$= \boxed{0.054 \text{ Wb}}$$

## 4.45 VECTOR DIAGRAMS OF SYNCHRONOUS GENERATOR :

- In three–phase alternators the vector diagrams are drawn taking the phase values. There is voltage drop $I_aR_a$ due to the armature resistance $R_a$, which is in phase with the armature current.
- There is voltage drop $I_aX_L$ due to the armature leakage reactance which is ahead of the armature current by 90°. There is decrease in the voltage due to the effect of armature reaction.
- To account for this effect, it is assumed that the armature has some reactance $X_a$.
- Such that the voltage drop due to the reactance $X_a$ is equal to the reduction in voltage due to the armature reaction.
- Sum of $X_L$ and $X_a$ is called $X_S$ and it is called the synchronous reactance. $X_S = X_L + X_a$.

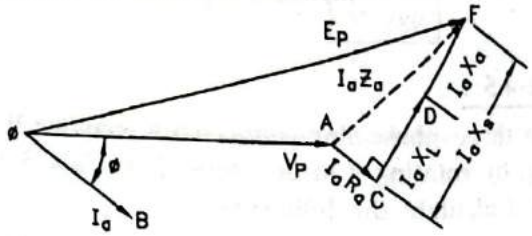


**FIG. 4.56 : VECTOR DIAGRAM OF ALTERNATOR AT LAGGING POWER FACTOR**

- Vector diagram of alternator at lagging power factor taking terminal voltage as the reference vector is shown in Fig. 4.56.

Vector OA = $V_p$ is taken as the reference vector.

Vector OB = $I_a$ comes $\phi^\circ$ behind voltage vector.

Vector AC = $I_aR_a$ is in phase with current $I_a$.

Scanned with CamScanner

Vector CD = $I_aX_L$ is ahead of $I_a$ by 90°.

Vector DF = $I_aX_a$ is also ahead of by 90°.

Vector CD + DF = CF = $I_aX_S$, where $X_S$ = synchronous reactance.

Vector AF = $I_aZ_S$ is the voltage drop due to the synchronous impedance.

$Z_S$ = Synchronous impedance and $Z_s = \sqrt{R_a^2 + X_s^2}$ ... (1)

- Vector OF = $E_p$ = Generated emf or no load terminal voltage.

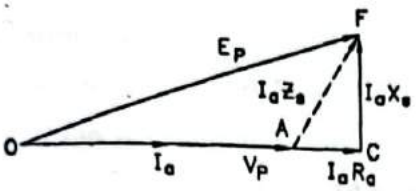


FIG. 4.57 : VECTOR DIAGRAM AT UNITY POWER FACTOR

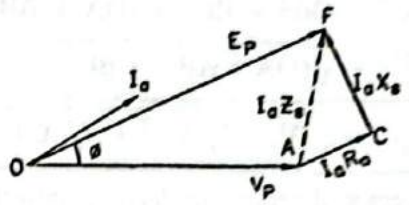


FIG. 4.58 : VECTOR DIAGRAM AT LEADING POWER FACTOR

- In Fig. 4.57 the vector diagram for lagging power factor and in Fig. 4.58 the vector diagram at leading power factor is shown.
- In Fig. 4.59, 4.60 and 4.61 vector diagrams taking current as reference vector are shown. In Fig. 4.59 vector diagram for lagging power factor, in Fig. 4.60 for unity power factor and in Fig. 4.61 the vector diagram for leading power factor are shown.

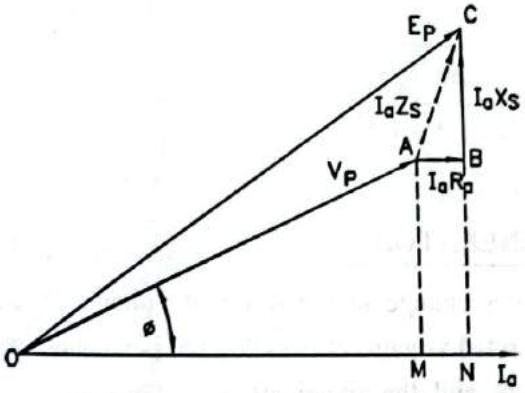


FIG. 4.59 : VECTOR DIAGRAM FOR LAGGING POWER FACTOR

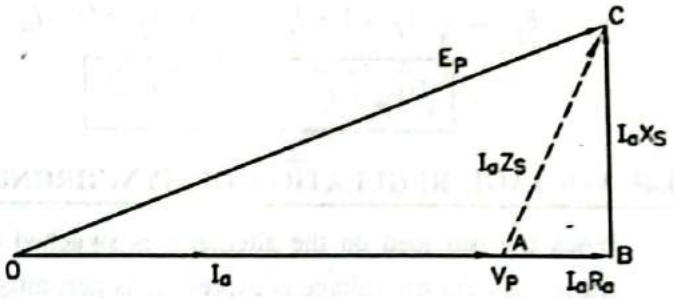


FIG. 4.60 : VECTOR DIAGRAM FOR UNITY POWER FACTOR

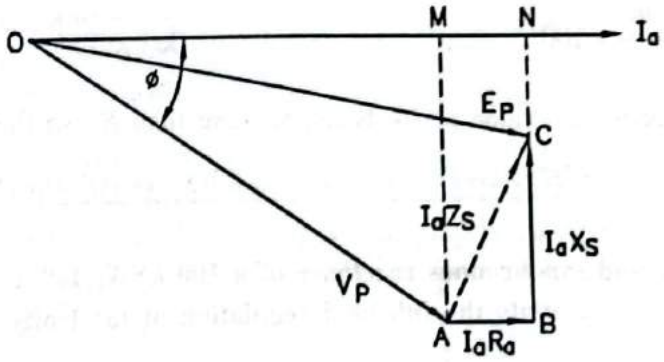


FIG. 4.61 : VECTOR DIAGRAM FOR LEADING POWER FACTOR

Scanned with CamScanner

- From the vector diagram we can obtain the expression for the induced emf $E_p$. Refer Fig. 4.59.

$$OC^2 = ON^2 + NC^2 = (OM + MN)^2 + (NB + BC)^2$$

$$\therefore \quad OC = \sqrt{(OM + MN)^2 + (NB + BC)^2}$$

$$\boxed{E_p = \sqrt{(V_p \cos\phi + I_a R_a)^2 + (V_p \sin\phi + I_a X_s)^2}} \quad \text{... (2)}$$

- From vector diagram for unity power factor shown in Fig. 4.60,

$$OC^2 = OB^2 + BC^2 = (OA + AB)^2 + BC^2$$

$$OC = \sqrt{(OA + AB)^2 + BC^2}$$

$$\boxed{E_P = \sqrt{(V_p + I_a R_a)^2 + (I_a X_s)^2}} \quad \text{... (3)}$$

- From vector diagram for leading power factor shown in Fig. 4.61,

$$OC^2 = ON^2 + NC^2 = (OM + NN)^2 + (NB - BC)^2$$

$$OC = \sqrt{(OM + MN)^2 + (NB - BC)^2}$$

$$\therefore \quad \boxed{E_p = \sqrt{(V_p \cos\phi + I_a R_a)^2 + (V_p \sin\phi - I_a X_s)^2}} \quad \text{... (4)}$$

- Equations (2), (3) and (4) can be shown by a single equation.

$$\boxed{E_p = \sqrt{(V_p \cos\phi + I_a R_a)^2 + (V_p \sin\phi \pm I_a X_s)^2}}$$

- Where + sign is used for the lagging power factor and – sign is used for the leading power factor.
- For unity power factor, $\cos\phi = 1$ and $\sin\phi = 0$.

$$E_p = \sqrt{(V_p \times 1 + I_a R_a)^2 + (V_p \times 0 \pm I_a X_s)^2} \quad \text{... (5)}$$

$$= \boxed{\sqrt{(V_p + I_a R_a)^2 + (I_a X_s)^2}}$$

## 4.46 VOLTAGE REGULATION OF SYNCHRONOUS GENERATOR :

- When the full load on the alternator is switched off, there is change in the terminal voltage. When this change in terminal voltage is expressed as percentage of the rated voltage, it is called the percentage voltage regulation. When the load is switched off, the field current and the speed are kept constant.

$$\% \text{ Regulation} = \frac{E_p - V_p}{V_p} \times 100$$

$$\text{OR} \quad = \frac{E_L - V_L}{V_L} \times 100$$

- At the leading power factor, the value of $V_L$ becomes more than $E_L$ so the regulation comes out to be negative.

**Example-4.6 :**

**The effective resistance and synchronous reactance of a 100 kVA, 440 V single phase alternator are 0.1 Ω and 0.3 Ω respectively. Calculate the full load regulation at (a) Unity (b) 0.8 lagging and (c) 0.8 leading power factors.**

***Solution :***

$kVA = 100, \quad V = 440 \text{ V}, \quad R_a = 0.1\ \Omega, \quad X_S = 0.3\ \Omega$

Scanned with CamScanner

$$kVA = \frac{V\,I}{1000}$$

$$\therefore \quad 100 = \frac{440 \times I}{1000}$$

$$\therefore \quad I = \frac{100 \times 1000}{440} = 227.3 \text{ A}$$

$$I_a R_a = 227.3 \times 0.1 = 22.7 \text{ V}$$

$$I_a X_s = 227.3 \times 0.3 = 68.2 \text{ V}$$

**(a) Unity power factor :**

$$V \cos\phi = 440 \times 1 = 440 \text{ V}$$

$$V \sin\phi = 440 \times 0 = 0 \text{ V}$$

$$E = \sqrt{(V\cos\phi + I_a R_a)^2 + (V\sin\phi + I_a X_s)^2}$$

$$= \sqrt{(440 + 22.7)^2 + (0 + 68.2)^2}$$

$$= 467.7 \text{ V}$$

$$\% \text{ Regulation} = \frac{E - V}{V} \times 100 = \frac{467.7 - 440}{440} \times 100 = \boxed{6.29\%}$$

**(b) 0.8 lagging power factor :**

$$\cos\phi = 0.8 \qquad \therefore \sin\phi = 0.6$$

$$V \cos\phi = 440 \times 0.8 = 352 \text{ V}$$

$$V \sin\phi = 440 \times 0.6 = 264 \text{ V}$$

$$E = \sqrt{(V\cos\phi + I_a R_a)^2 + (V\sin\phi + I_a X_s)^2}$$

$$= \sqrt{(352 + 22.7)^2 + (264 + 68.2)^2}$$

$$= 500.7 \text{ V}$$

$$\% \text{ Regulation} = \frac{500.7 - 440}{440} \times 100 = \boxed{13.79\%}$$

**(c) 0.8 leading power factor :**

$$E = \sqrt{(V\cos\phi + I_a R_a)^2 + (V\sin\phi - I_a X_s)^2}$$

$$= \sqrt{(352 + 22.7)^2 + (264 - 68.2)^2}$$

$$= 422.8 \text{ V}$$

$$\% \text{ Regulation} = \frac{422.8 - 440}{440} \times 100 = -3.9\%$$

$$= \boxed{-3.9\ \%}$$

## 4.47 METHODS OF DETERMINING VOLTAGE REGULATION OF SYNCHRONOUS GENERATOR :

- The following are the methods of determining voltage regulation of alternator:

1. Direct loading method
2. Synchronous impedance method
3. Ampere turn or mmf method or Rothert's method
4. Zero power factor method or Potier's method

Scanned with CamScanner

**1. Direct loading method :**

- In this method the synchronous generator is connected to the prime mover. In this case D. C. shunt motor is connected.
- Armature of the synchronous generator is connected to the load. An ammeter is connected in line to measure the armature current.
- Volt meter is connected across line and neutral (or across the two lines) to measure the armature voltage.

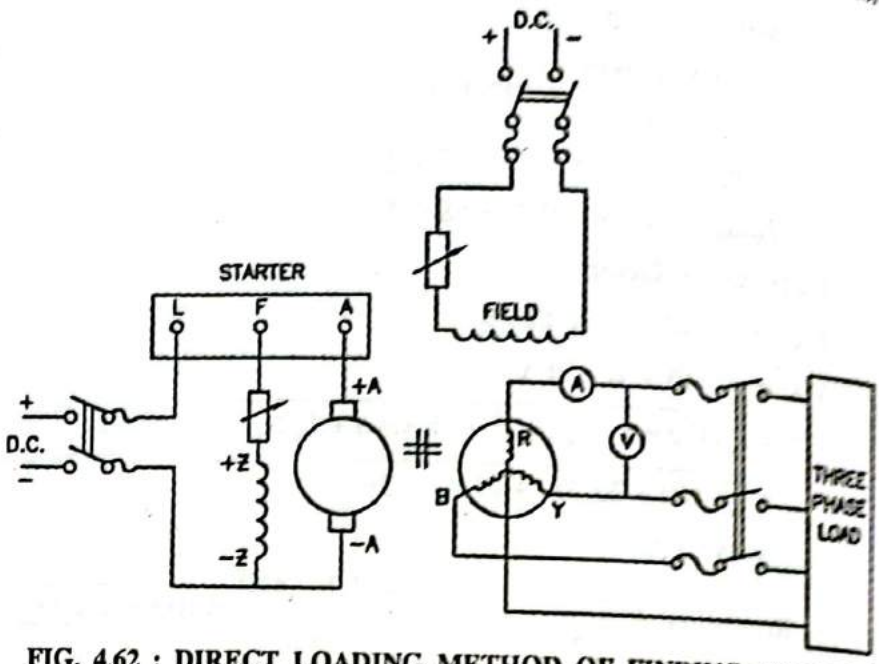


FIG. 4.62 : DIRECT LOADING METHOD OF FINDING VOLTAGE REGULATION OF SYNCHRONOUS GENERATOR

1. D.C. supply is switched on and shunt motor is started with the help of shunt motor starter. Speed of the prime mover is adjusted equal to the rated speed of the synchronous generator with the help of shunt field regulator.
2. Field supply of the synchronous generator is switched on and with the help of field resistance the voltage of the synchronous generator is adjusted to its rated value. The reading is noted.
3. Load switch of the synchronous generator is made on and the synchronous generator is loaded in steps. Every time the speed is adjusted to the rated value with the help of resistance connected in the field circuit of the D.C. motor. The load is adjusted finally to the rated full load value and the speed is adjusted to the rated value. Reading of the terminal voltage $V_P$ or $V_L$ is noted.
4. Load is decreased slowly and the speed is adjusted to the rated value every time. The load is made zero and the speed is adjusted to the rated value. Reading of the no load terminal voltage $E_P$ (or $E_L$) is taken and noted.
5. $$\% \text{ Regulation} = \frac{E_p - V_p}{V_p} \times 100 \text{ or} = \frac{E_L - V_L}{V_L} \times 100$$

**2. Synchronous impedance method :**

- Two tests are necessary to be performed in this method.

(a) Open circuit test
(b) Short circuit test

**(a) Open circuit test :**

- In this test, the load is not connected to the armature. Volt meter is connected across the armature. Alternator is started and the speed is adjusted to the synchronous speed.
- Value of the field current is increased from zero in steps and adjusted to the rated value. Every time the readings of the terminal voltage and the field current are taken and noted.
- Then the field current is decreased in steps and the readings are testen.

Scanned with CamScanner

- Graphs of terminal voltage v/s field current are drawn for both the increasing and decreasing values of the field current are plotted.
- Mean curve is drawn which is the open circuit characteristics (OCC). The speed is kept constant equal to the synchronous speed throughout the test.

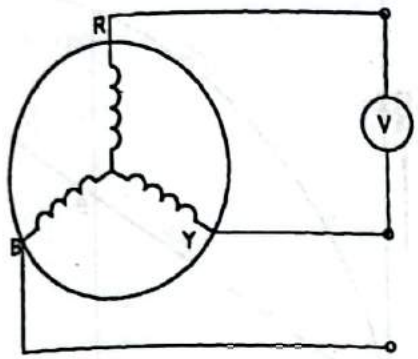


FIG. 4.63 : OPEN CIRCUIT TEST

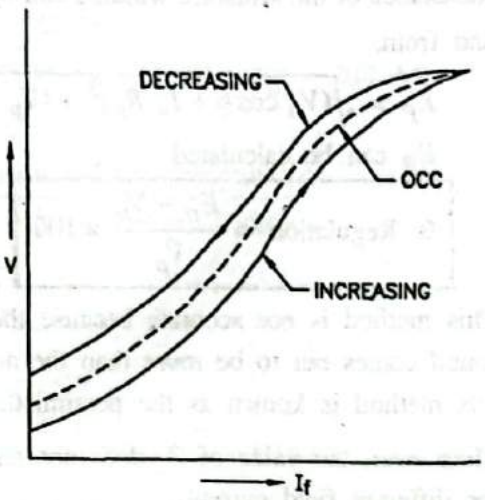


FIG. 4.64 : OPEN CIRCUIT CHARACTERISTICS

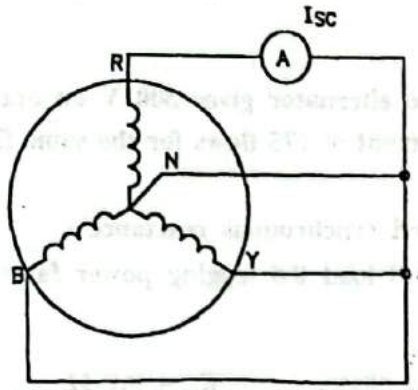


FIG. 4.65 : SHORT CIRCUIT TEST

**(b) Short circuit test :**

- In this the armature is short circuited. An ammeter is connected in one phase so that the short circuit current can be measured.
- Alternator is started and the field current is increased from zero in steps. Every time the readings of the field current and the short circuit current are taken and noted.
- The value of the field current is increased such that the value of the short circuit current does not exceed the full load current. The speed need not be exactly equal to the synchronous speed but it should be constant.
- Graph of short circuit current v/s field current is drawn which is called the short circuit characteristic (SCC). To find the regulation, both the OCC and SCC are drawn on the same sheet as shown in figure 4.66.

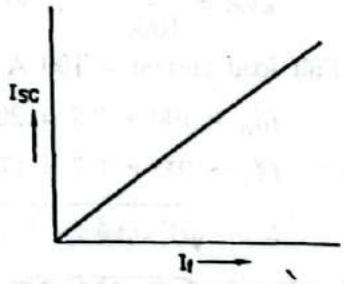


FIG. 4.66 : SHORT CIRCUIT CHARACTERISTIC

- For the field current equal to OC, open circuit voltage equal to CA is produced. And due to it the short circuit current equal to BC is produced. Now this short circuit current is limited by the impedance of the armature winding only.

Scanned with CamScanner

- So synchronous impedance per phase = $\dfrac{\text{Open circuit voltage per phase}}{\text{Short circuit current per phase}}$

$$Z_s = \frac{AC}{BC}$$

- Resistance of the armature winding can be measured. So from $X_s = \sqrt{Z_s^2 - R_a^2}$, $X_s$ can be calculated and from,

$$E_P = \sqrt{(V_p \cos\phi + I_a R_a)^2 + (V_p \sin\phi \pm I_a X_s)^2}$$

$E_P$ can be calculated.

$$\boxed{\% \text{ Regulation} = \frac{E_p - V_p}{V_p} \times 100}$$

- This method is not accurate because the value of $Z_s$ found comes out to be more than the actual value so this method is known as the pessimistic method.
- More over, the value of $Z_s$ does not remain constant for different field currents.

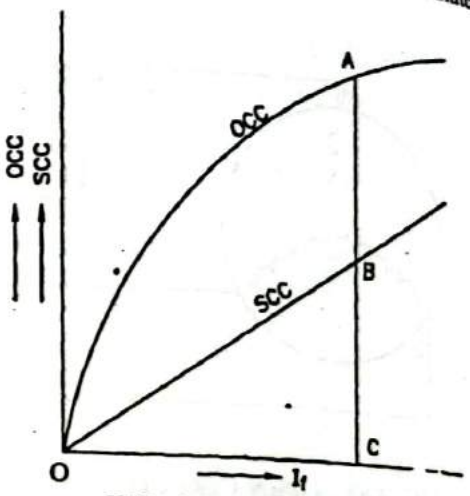


FIG. 4.67 : OCC AND SCC

**Example-4.7 :**

**A 50 kVA, 500 V, single phase alternator gives 300 V on open circuit at the field current of 15 A. While on short circuit a short current of 175 flows for the same field current. Assuming the armature resistance of 0.2 Ω, calculate**

**(1) Synchronous impedance and synchronous reactance**

**(2) Percentage regulation at full load 0.8 lagging power factor.**

***Solution :***

$kVA = 50$, $V = 500$ V, single phase, $R_a = 0.2\ \Omega$,

$I_f = 15$ A, OCV = 300 V, SCC = 175 A,

$$\text{Synchronous impedance} = \frac{\text{Open circuit voltage}}{\text{Short circuit current}} = \frac{300}{175} = 1.71\ \Omega$$

$$\text{Synchronous reactance} = X_s = \sqrt{Z_s^2 - R_a^2} = \sqrt{1.71^2 - 0.2^2} = 1.698 \text{ say } 1.7\ \Omega$$

$$kVA = \frac{VI}{1000} \quad \therefore 50 = \frac{500 \times I}{1000}$$

Full load current = 100 A

$IR_a = 100 \times 0.2 = 20$ V

$IX_s = 100 \times 1.7 = 170$ V

$$E = \sqrt{(V\cos\phi + I_a R_a)^2 + (V\sin\phi + I_a X_s)^2}$$

$$= \sqrt{(500 \times 0.8 + 20)^2 + (500 \times 0.6 + 170)^2}$$

$$= 630.3 \text{ V}$$

$$\% \text{ Regulation} = \frac{E - V}{V} \times 100 = \frac{630.3 - 500}{500} \times 100 = \boxed{26.06\%}$$

Scanned with CamScanner

**Example-4.8 :**

**The effective armature resistance of a 3–phase, star connected, 500 kVA, 1100 V alternator is 0.1 Ω per phase. Field current of 30 A produces the open circuit voltage of 400 V (line value) and the short circuit current of 200 A. Calculate the full load regulation at 0.8 power factor lagging.**

***Solution :***

$kVA = 500$, $V_L = 1100$, 3–phase, star, 50 Hz,

$R_a = 0.1\ \Omega$ per phase, $I_f = 30$ A, OCV = 400 V (line) and $I_{sc} = 200$ A

% Regulation at 0.8 lagging power factor ?

$$\text{Synchronous impedance per phase} = Z_s = \frac{\text{Open circuit voltage per phase}}{\text{Short circuit current per phase}}$$

$$= \frac{400/\sqrt{3}}{200}$$

$$= 1.15\ \Omega$$

$$\text{Synchronous reactance per phase } X_s = \sqrt{Z_s^2 - R_a^2} = \sqrt{1.15^2 - 0.1} = 1.14\ \Omega$$

$$V_L = 1100 \text{ V} \qquad \therefore V_p = \frac{1100}{\sqrt{3}} = 635 \text{ V}$$

$$V_p \cos\phi = 635 \times 0.8 = 508 \text{ V}$$

$$V_p \sin\phi = 635 \times 0.6 = 381 \text{ V}$$

$$kVA = \frac{\sqrt{3}\ V_L\ I_L}{1000}$$

$$500 = \frac{\sqrt{3} \times 1100 \times I_L}{1000}$$

$$\therefore \quad I_L = I_a = \frac{500 \times 1000}{\sqrt{3} \times 1100} = 262.4 \text{ A}$$

$$I_a R_a = 262.4 \times 0.1 = 26.24 \text{ V}$$

$$I_a X_s = 262.4 \times 1.14 = 299 \text{ V}$$

$$E = \sqrt{(V_p \cos\phi + I_a R_a)^2 + (V_p \sin\phi \pm I_a X_s)^2}$$

$$= \sqrt{(508 + 26.2)^2 + (381 + 299)^2}$$

$$= 864.7 \text{ V}$$

$$\% \text{ Regulation} = \frac{E_p - V_p}{V_p} \times 100 = \frac{864.7 - 635}{635} \times 100 = \boxed{36.17\%}$$

## 4.48 APPLICATIONS OF SYNCHRONOUS GENERATOR :

- Synchronous generator is used to generate A. C. power. Different applications are as follows.

**1. In thermal power stations and in nuclear power stations :**

- It is used to generate power in huge power stations like thermal and nuclear power stations. Such synchronous generator are of fixed armature and rotating field type.



Scanned with CamScanner

- As the speed of the steam turbine is high, the rotor is of two-pole cylindrical type. Its capacity is large, for example 200 MW.

**2. In hydro power stations :**

- Synchronous generator are also used in hydro power stations. The type of alternator depends upon the head of water. In high head hydro power stations, the impulse type turbine is used.
- The synchronous generator used is of horizontal axis type with cylindrical rotor. In case of medium head and low head hydro power plant, reaction type tor Kaplan type turbines are used. The speed of the turbine is less.
- So salient pole type alternators are used. These are vertical axis type alternators having large diameter and small axial length.

**3. In diesel power stations :**

- The alternators are run by diesel engines. Its capacity is less and these are of salient pole type. These are used in power system at the time of peak load.

**4. In factories :**

- When continuous power is required, alternators driven by diesel engines are used in factories for continuous process.

**5. In laboratories :**

- In laboratories small capacity alternators of fixed field and rotating armature type are used. D. C. motor is used as the prime mover.

**6. In emergency supply :**

- When the power supply fails regularly due to the shortage of power, single phase alternators of low capacity are used.
- These are run by petrol engines. Such alternators are also used in hospitals etc.

**Exercise**

**Rotating Magnetic Field :**

1. What do you mean by Electrical Machine ? **(Refer Section-4.1)**
2. Explain types of Electrical Machines ? **(Refer Section-4.1)**
3. What is rotating magnetic field ? **(Refer Section-4.2.1)**
4. Explain how the rotating magnetic field is produced when three phase winding is given three phase a.c. supply. **(Refer Section-4.2.2)**

**Three Phase Induction Motor :**

5. Explain construction of squirrel cage induction motor. **(Refer Section-4.4.2(1))**
6. Explain construction of spiring induction motor. **(Refer Section-4.4.2(2))**
7. Explain working principle of three phase induction motor. **(Refer Section-4.6)**
8. Obtain the equation of the starting Torque of Induction Motor. **(Refer Section-4.9)**
9. Obtain equation of running Torque of Induction Motor. **(Refer Section-4.10)**
10. Draw and explain the Torque – Slip characteristic of Induction Motor. **(Refer Section-4.11)**
11. Draw and explain the Torque – Speed characteristic of Induction Motor. **(Refer Section-4.12)**
12. Draw the equivalent circuit of the induction motor. **(Refer Section-4.13)**
13. What are the advantages and disadvantages of three phase induction motor ? **(Refer Section-4.15)**

Scanned with CamScanner

**Single Phase Induction Motor :**

14. Explain working principle of single phase Induction Motor. **(Refer Section-4.18)**
15. What are the starting methods for single phase induction motor. **(Refer Section-4.19)**
16. Write short notes on :
    (1) Shaded Pole Induction Motor. **(Refer Section-4.20.1)**
    (2) Resistance start Induction Motor. **(Refer Section-4.20.2)**
    (3) Capacitor start Induction Motor. **(Refer Section-4.20.3)**
    (4) Capacitor run Induction Motor. **(Refer Section-4.20.4)**
    (5) Capacitor start Capacitor run Induction Motor. **(Refer Section-4.20.5)**
17. What are the applications of single phase induction motor ? **(Refer Section-4.21)**

**Separately Excited D.C. Motor :**

18. Explain working principle of separately excited D.C. Motor. **(Refer Section-4.30)**
19. Explain various characteristics of separately excited D.C. Motor. **(Refer Section-4.31)**
20. What are the speed control methods used for separately excited D.C. Motor. Explain any one in detail. **(Refer Section-4.32)**
21. What are the advantages, disadvantages and applications of separately excited D.C. Motor ? **(Refer Section-4.33, 4.34 & 4.35)**

**Synchronous Generator :**

22. Explain construction of Synchronous Generator. **(Refer Section-4.37)**
23. Explain working of Synchronous Generator. **(Refer Section-4.39)**
24. Derive the e.m.f. equation of Synchronous Generator. **(Refer Section-4.40)**
25. Define voltage regulation of Synchronous Generator. **(Refer Section-4.46)**
26. Explain the various methods used for determine the voltage regulation of Synchronous Generator. **(Refer Section-4.47)**
27. State the applications of Synchronous Generator in different fields. **(Refer Section-4.48)**

## GTU QUESTIONS AND ANSWERS

**Note to the Students :**

- **Below Questions are from previous GTU Examination Papers**

### January-2019

1. Prepare a list of parts of a DC machine. Explain any one part in detail. **3-Marks**

**Ans. : Refer Section-4.24**

2. Mention the types of single phase induction motor. Explain any one of them. **4-Marks**

**Ans. : Refer Section-4.20**

3. Give a comparison between squirrel cage induction motor and wound rotor induction motor. **4-Marks**

**Ans. : Refer Section-4.4.1**

4. Describe the stator construction of a single phase induction motor. **3-Marks**

**Ans. : Refer Section-4.20.1**

Scanned with CamScanner

5. Explain the term rotating magnetic field with proper diagrams in case of a three phase induction motor. **7-Marks**

**Ans. : Refer Section-4.2**

6. Describe the construction of rotor for a slip ring type three phase induction motor. **3-Marks**

**Ans. : Refer Section-4.2.1(2)**

7. Explain the working principles of a synchronous generator and a synchronous motor. **7-Marks**

**Ans. : Refer Section-4.36 & 4.38**

**May-2019**

8. State significance of the back emf in DC motor. **3-Marks**

**Ans. : Refer Section-4.27**

9. Classify and compare various DC motor. **4-Marks**

**Ans. : Refer Section-4.29**

10. Explain construction of synchronous generator with diagram. **7-Marks**

**Ans. : Refer Section-4.37**

11. Give the classification of Induction motor. **3-Marks**

**Ans. : Refer Section-4.3**

12. Discuss how the rotating magnetic field is produced in three phase induction motor. **4-Marks**

**Ans. : Refer Section-4.2**

13. Explain the working of single phase induction motor with diagram.

**Ans. : Refer Section-4.18 & 4.19**

**January-2020**

14. Give Merits, Demerits and Applications of Induction Motor. **4-Marks**

**Ans. : Refer Section-4.15, 4.16 & 4.17**

15. Explain in detail the construction of an Alternator. **7-Marks**

**Ans. : Refer Section-4.37**

16. Explain working principle of D.C. Motor. **3-Marks**

**Ans. : Refer Section-4.26**

17. Compare poly phase Induction Motor and single phase Induction Motor. **4-Marks**

18. Explain Generation of Rotating Magnetic Field in 3-phase Induction Motor with diagrams and equations. **7-Marks**

**Ans. : Refer Section-4.2**

**December-2020**

19. How the rotating magnetic field is produce in three-phase induction motor ? Explain in brief. **3-Marks**

**Ans. : Refer Section-4.2**

Scanned with CamScanner

20. Why single-phase induction motor is not self starting while three-phase induction motor is self starting. Explain in brief. **4-Marks**

**Ans. : Refer Section-4.18**

21. Explain construction of Alternator with neat diagram. **7-Marks**

**Ans. : Refer Section-4.37**

22. Justify that how back e.m.f. in DC motor acts like a governor. **3-Marks**

**Ans. : Refer Section-4.27**

23. State the comparison of generator and motor action with respect to design and working principle. Draw the necessary diagram. **4-Marks**

**Ans. : Refer Section-4.25**

24. Write working principle of DC motor with neat diagram. **7-Marks**

**Ans. : Refer Section-4.26**

25. A d-c generator has an e.m.f of 200 volts and provides a current of 10 amps. How much energy does it provide each minute ? **3-Marks**

***Solution :***

$$\text{Energy} = \text{Power} \times \text{Time} \quad \text{... (1)}$$

$$\text{Power,} \quad P = V \times I$$

$$= 200 \times 10$$

$$= 200 \text{ Watt} \quad \text{... (2)}$$

$$\therefore \quad \text{Energy} = 2000 \times 60$$

$$= 1,20,000 \times \text{Joules}$$

$$= \boxed{120 \text{ KJoule}}$$

■ ✻ ■



Scanned with CamScanner

CHAPTER 5

# Electrical Installation

## Contents


5.1 Switch Fuse Unit (SFU) ..... 2016, 2017, 2019, 2020
5.2 Types of Electrical Fuse
5.3 Miniature Circuit Breaker (MCB) ..... 2015
5.4 Comparison Between Fuse and MCB ..... 2019, 2020
5.5 Earth Leakage Circuit Breaker (ELCB) ..... 2015, 2020
5.6 Moulded Case Circuit Breakers (MCCB) ..... 2019
5.6.1 Thermal Mangetic Release MCCB
5.6.2 Electronic Release MCCB
5.6.3 Mircroprocessor Release MCCB
5.7 Electrical Wires ..... 2017
5.7.1 Types of Wires
5.8 Types of Cables ..... 2015, 2016, 2018, 2019
5.8.1 Construction of Cables
5.8.2 Classification of Cables
5.9 Earthing ..... 2015, 2017, 2018
5.9.1 Various Methods of Earthing ..... 2019, 2020
5.10 Safety Precaution for Electrical Appliances ..... 2020
5.11 Batteries ..... 2016
5.12 Lead-acid Battery
5.13 Life of Battery
5.14 Efficiency of Battery ..... 2015
5.15 Charging Methods ..... 2017, 2020
5.16 Important Characteristics of Batteries ..... 2019
5.17 Power Rating of Electrical Appliances
5.18 Power Factor ..... 2019
5.19 What is the Meaning of Poor Power Factor ?
5.20 Methods of Improving Power Factor
* Exercise
* GTU Questions and Answers


### G.T.U. QUESTION PAPER STATISTICAL ANALYSIS

| | January-2019 | May-2019 | December-2020 |
|---|---|---|---|
| Marks | 28 | 28 | 22 |
| Repeated Questions Marks | 17 | 21 | 22 |



Scanned with CamScanner

Syllabus Topic : Switch Fuse Unit (SFU)

## 5.1 SWITCH FUSE UNIT (SFU) :

**GTU, May-2016, 2017; January-2019, Dec. 2020**

**GTU Questions**

1. Write function of 'fuse' in electrical circuit. **[May-2016, 1-Mark]**
2. Give a list of safety devices used for home appliances. **[Jan. 2019, Dec. 2020, 3-Marks]**

- The Fuse is a device used in an electrical circuit for protecting electrical equipment against over loads and short circuit.
- A fuse is connected in series with the circuit to be protected as shown in Fig. 5.1 and carries the load current without overheating under normal conditions.
- However, when abnormal condition occurs, an excessive current flows through it.
- This raises the temperature which melts the fuse element and opens the circuit.

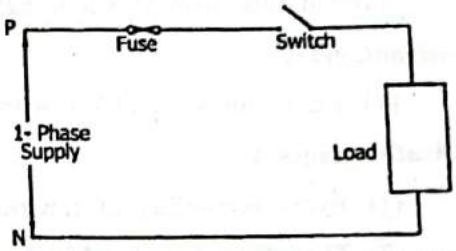


**FIG. 5.1 : CONNECTION OF FUSE IN A CIRCUIT**

- Thus, this protects the machines or apparatus from damage which can be caused by the excessive currents.
- It is to be noted that the fuse is always connected in phase wire so that under fault conditions when fuse melts, phase may not reach at the load terminal. If it would be placed in the neutral wire, the phase will reach at the load even if the fuse melts.

**Fuse Wire Materials :**

- The material used for fuse elements must be low melting point, low ohmic loss and low cost.
- Thin, Lead, Zinc, Silver, Copper and Aluminum are the materials used for Fuse element.

**Advantages of Electrical Fuse :**

1. It is the cheapest form of protection available.
2. It requires no maintenance.
3. It can break the electrcial circuit without noise or smoke.

**Disadvantages of Electrical Fuse :**

1. It has to be replaced after each operation.

**Application of Electrical Fuse :**

- The very important applications of fuses are as follows :
  1. Protection of cables.
  2. Protection of motors
  3. Protection of semiconductor devices etc.

## 5.2 TYPES OF ELECTRICAL FUSE :

**GTU, May-2013, 2016**

**GTU Questions**

1. State types of fuse and explain any one. **[May-2013, 2016, 4-Marks]**

- There are major three types of fuses :

1. Kit–Kat type or rewireable type fuse
2. Cartridge type fuse
3. H.R.C. type fuse

Scanned with CamScanner

**1. Kit–Kat type fuse :**

- This is commonly used in house wiring. It is made of porcelain in two parts i.e. base and a fuse carrier. The base is with switch board. The phase or incoming wire is inserted from one side and connected to the terminal.
- Onward connection is taken from the other terminal known as out going terminal.
- The two terminals inside the base are connected through fuse wire which is held in the fuse carrier.

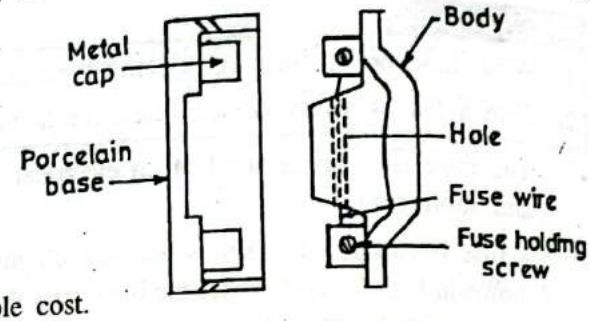


FIG. 5.2 : KIT-KAT FUSE

**Advantages :**

(1) Easy removal and replacement of fuse at negligible cost.

**Disadvantages :**

(1) Every possibility of rewiring by a wrong size or improper material wire.

(2) They have low breaking capacity, cannot be used for too high currents.

(3) The fuse wire can deteriorate over a period of time due to oxidation through continuous heating of the fuse element.

(4) Difficult to assess true value of the fuse element because fusing current depends upon the length and location of fuse element.

**2. Cartridge type fuse :**

- This is a totally enclosed type fuse unit.
- It is enclosed in an insulating container of tube shape. The container carrying the fuse wire is filled up with powder and sealed at its ends with metallic.

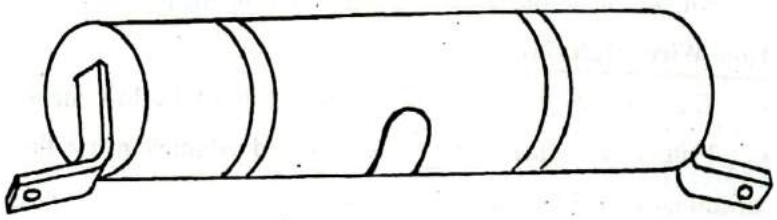

FIG. 5.3 : CARTRIDGE FUSE

- The power provides good insulating path for the fuse and helps to absorb the arc at the time of blowing up of fuse. It is not very economical. It is generally used at 415 V supply system.

**Advantages :**

1. Non-deterioration of the fuse element.
2. Usually more accurate.

**Diadvantages :**

1. More expensive to replace.

**3. H. R. C. (High Rupturing Capacity) Fuse :**

- With a heavy load capacities of the distribution network, extremely heavy currents would flow into the fault and the fuse clearing the fault would be required to withstand heavy stresses in the process. H. R. C. cartridge fuses are therefore used for such duties and these are specially designed for extremely rapid operations.
- HRC fuses are also designed to absorb rapid heat produced by arc formed at the time of blowing out.
- HRC fuse units consist of a heat resisting ceramic cylindrical body having low coefficient of thermal expansion with heavy copper contacts at the main body.
- It is filled with incombustible powder which absorbs the arc produced at the time of blowing up of fuse to avoid any possibility of flashover across adjacent live lines.

Scanned with CamScanner

- The rating is much more accurate and are particularly suited for breaking much heavier currents safely.

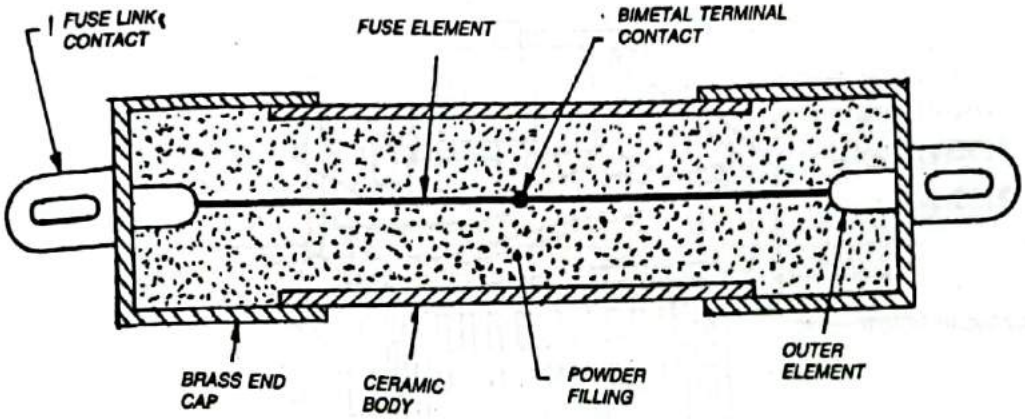


**FIG. 5.4 : H. R. C. FUSE**

**Advantages :**

1. They are capable of clearing high as well as low fault currents.
2. They do not deteriorate with age.
3. They have high speed of operation.

**Diadvantages :**

1. They have to be replaced after each operation.

**Syllabus Topic : MCB**

## 5.3 MINIATURE CIRCUIT BREAKER (MCB) : GTU, May-2015; Jan. 2019, 2020, Dec. 2020

**GTU Questions**

1. Explain working of ELCB and MCB **[May-2015, Jan. 2020, Dec. 2020 4-Marks]**
2. Write a short note on Miniature Circuit Breaker (MCB). **[January-2019, 4-Marks]**

- A miniature circuit breaker (MCB) is an electromechanical device which operates and disconnects the circuit when the current reaches a pre determined value.

**Why use an MCB ?**

- To secure our household appliances to heavy electrical short circuit and overload current, MCB is used.

**Principle of operation :**

- MCB is a device which operate on the two principles for the protection against overload and short circuit :

1. Thermal for normal overload protection.
2. Magnetic for short circuit protection.

- The thermal operation is achieved by bimetallic strip, which deflects when heated by any over current flowing through it.
- In doing so releases the latch mechanism and causes the contacts to open. It possesses inverse time-current, characteristics i.e. greater the current shorter the time required to operate the MCB.
- When short circuit occurs, the rising current energizes the solenoid operating plunger to strike the trip lever causing immediate release of the latch mechanism.
- Rapidity of the magnetic solenoid operation causes instantaneous opening of contacts. MCB with a cross–sectional view is shown in Fig. 5.5.



Scanned with CamScanner

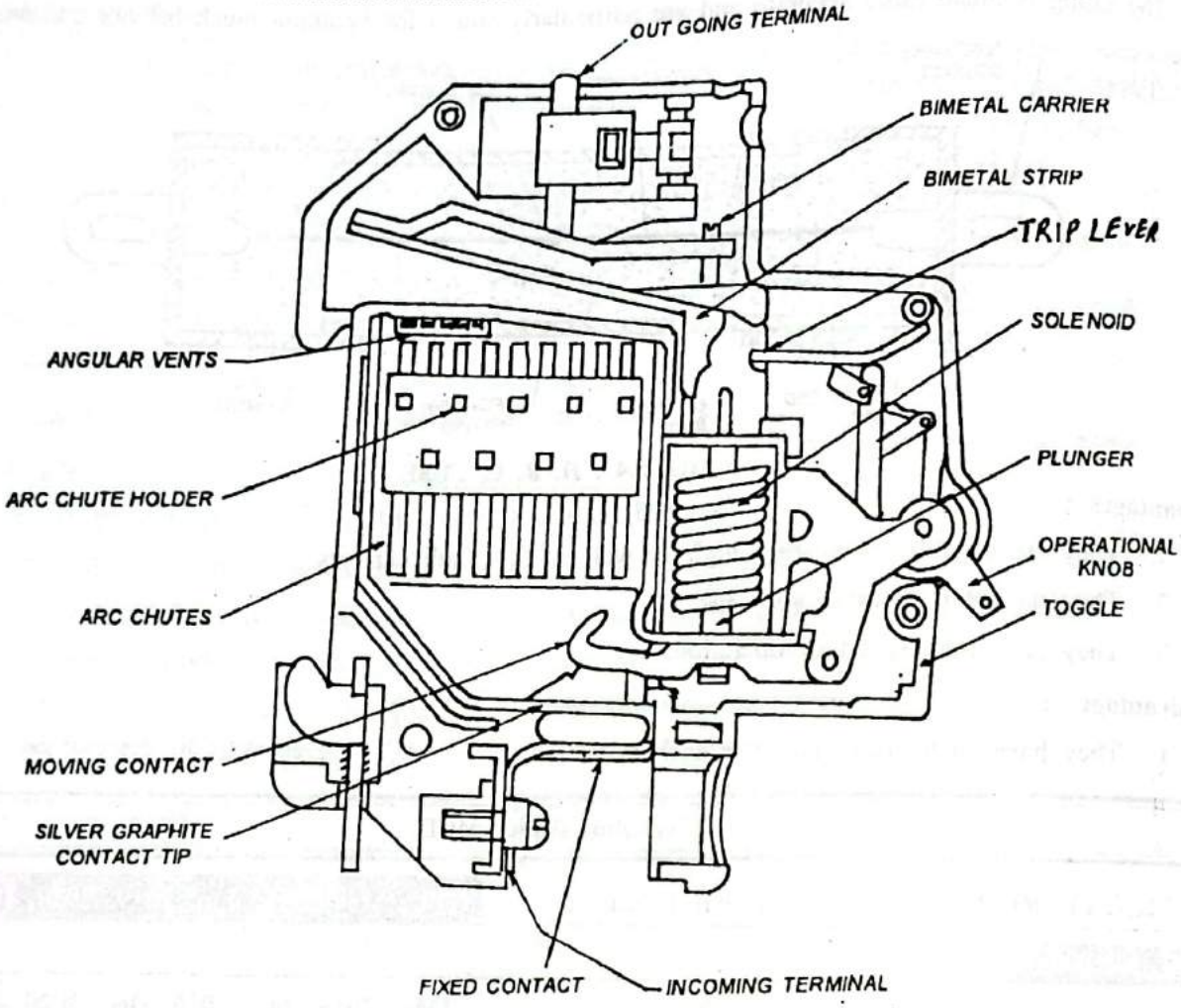


**FIG. 5.5 : TYPICAL MCB UNIT CROSS-SECTIONAL VIEW**

**Application of MCB :**

- MCBs are required in homes, offices, shops distribution boards for protection of individual circuit and complete wiring system in that building through main circuits.
- MCBs are slightly more expensive than fuses but this is offset by the fact that no cost is involved in resetting them after operation and it is very quick and simple process.
- They are being used extensively these days and are virtually replacing the traditional rewireable fuses.

**Advantages of MCB :**

1. Easily identify the fault zone of an electrical circuit.
2. Simple to resume supply.
3. Electrically safer.
4. More sensitive to current than the fuse.
5. Less maintenance and replacement cost.

**Disadvantages of MCB :**

1. Only disadvantage over fuse is, this device is costlier.

Scanned with CamScanner

## 5.4 COMPARISON BETWEEN FUSE AND MCB :

**GTU, January-2010, 2019; May-2019**

**GTU Questions**

1. Give comparison between fuse and MCB with regard to protection in wiring installation. **[January-2010, 4-Marks]**
2. Discuss the difference between MCB and Fuse. **[January-2019, 3-Marks]**
3. Give the comparison of fuse and MCB. **[May-2019, 4-Marks]**

| Fuse | MCB |
|---|---|
| 1. It is used to break the current in the faulty condition only. | 1. It is used to make and break the circuit in the healthy condition and to break current at the time of fault. |
| 2. Operating time is less. | 2. Operating time is more. |
| 3. Breaking capacity it less. | 3. Breaking Capacity is much high. |
| 4. Operating is simple | 4. Operation is complicated. |
| 5. Cost is very less. | 5. Cost is very high. |

## 5.5 EARTH LEAKAGE CIRCUIT BREAKER (ELCB) :

**GTU, April-2010; June-2010; May-2012, 2015; Dec. 2011, 2013, 2015; Jan. 2019, 2020; Dec. 2020**

**GTU Questions**

1. Explain working of ELCB and MCB. **[April-2010, Jan. 2020, Dec. 2020, 4-Marks]**
2. Give the circuit diagram of ELCB. Explain its working and applications. **[June-2010, 4-Marks]**
3. Explain the working of earth leakage circuit breaker with diagram. **[December-2011, 7-Marks]**
4. List various protective devices used in the electrical circuit. Write a brief note on ELCB. **[May-2012, 5-Marks]**
5. Write short note on ELCB. **[December-2013, 7-Marks]**
6. What do you mean by earthing ? Analyze earthing concept with the help of a device ELCB (Earth Leakage Circuit Breaker) used at our residence. **[May-2015, 7-Marks]**
7. Explain in brief : ELCB **[December-2015, 1-Mark]**
8. Write a short note on Earth Leakage Circuit Breaker (ELCB). **[January-2019, 4-Marks]**

- An ECLB is a safety device used for installing an electrical device with high earth impedance to avoid shock. The main purpose of Earth leakage circuit breaker (ELCB) is to stop damage to humans and animals due to electric shock.

**Types of Earth Leakage Circuit Breaker (ELCB) :**

- There are two types of Earth Leakage Circuit Breaker (ELCB) :
  - Voltage Operated ELCB
  - Current Operated ELCB

**Principle of operation :**

It is current operated device designed to operate when a leakage current exceeds a predetermined value. It essentially consists of an operating coil and a trip mechanism which operates contacts controlling the supply to the circuit concerned.

Consider a single–phase circuit. The two supply wires i.e. phase and neutral are fed through separate winding of a current transformer as shown in Fig. 5.6(a).

Scanned with CamScanner

- Another winding controls the tripping mechanism.
- The current through the phase wire is equal to the current in the neutral wire i.e.

$$\boxed{I_p = I_n}$$

- Therefore, the fluxes linking the phase and neutral conductor are equal in magnitude and opposite in directions. Thus, no flux links with the tripping winding.
- Hence no induced is produced at the secondary or tripping winding. However, if more current flows in the phase conductor than in the neutral conductor as a result of leakage or a fault between phase and earth, an out of balance flux will result in an e.m.f. being in the trip coil. or secondary coil wound on the transformer, which will open the contacts of ELCB and isolate the circuit from the supply.
- For a 3–phase circuit, the connection is shown in Fig. 5.6(b).

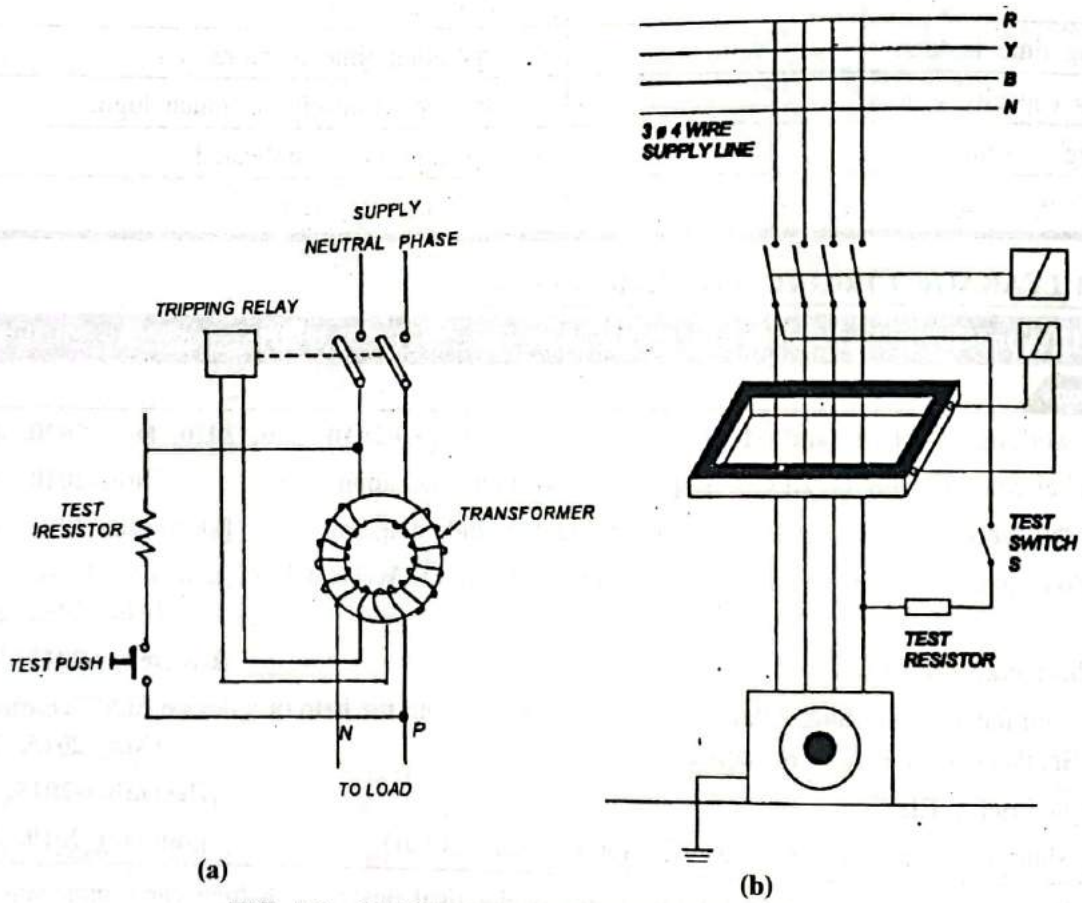


FIG. 5.6 : EARTH LEAKAGE CIRCUIT BREAKER

- A test button is included in the ELCB for testing the trip mechanism. ELCB should be tested by pressing the 'Test Switch', at least once in a month. If the ELCB does not trip even after pressing the 'Test Switch' it means that ELCB has gone faulty and will not trip when a human body comes in contact with live conductor.

**Advantages of ELCB :**

1. The ELCB provides a cheap and efficient form of earth-leakage protection.
2. The supply is isolated when an earth fault occurs.
3. They are less sensitive to fault conditions, hence it has less occurrences of nuisance tripping.

**Disadvantages of ELCB :**

1. The complete supply is disconnected when a fault occurs in any part of the installation.

Scanned with CamScanner

Syllabus Topic : MCCB

## 5.6 MOULDED CASE CIRCUIT BREAKERS (MCCB) : GTU, January-2019

**GTU Questions**

1. What is MCCB ? Where is it used ? [January-2019, 3-Marks]

- Moulded Case Circuit Breakers are electromechanical devices which protect a circuit from Overcurrent and Short Circuit. They provide Overcurrent and Short Circuit Protection for circuits ranging from 63 Amps up to 3000 Amps.

**Types of MCCBs :**

1. Thermal Magnetic Release MCCB
2. Electronic Release MCCB
3. Microprocessor Release MCCB

### 5.6.1 Thermal Mangetic Release MCCB :

- Thermal magnetic circuit brekaers use bimetals and electromagnetic assemblies to provide overcurrent protection.
- Thermal magnetic circuit breaker is most common use for over current and short circuit protection.
- It is a combnation of Thermal Circuit Breaker and Magnetic Circuit Breaker.
- It contain two different switching mechanisms, a bimetal switch and an electromagnet.
- The thermal Property is used to sense the overload and Magnetic Property is used to sense the short circuit.

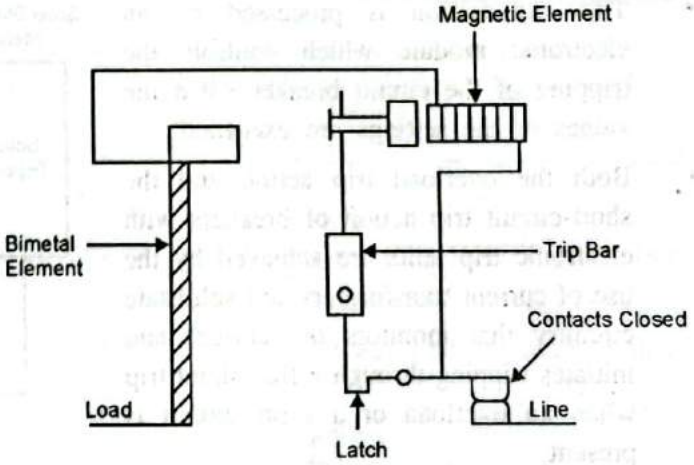


FIG. 5.7 : THERMAL MAGNETIC RELEASE MCCB

**Characteristics :**

- In Thermal Magnetic Circuit Breaker both Thermal element (Bimetallic Strip) and Magnetic element (Electromagnet) are connected in series with load.
- In normal Load, a bimetallic element is heated by the nromal load currnet, the bimetallic element does not bend, and the magnetic element does not attract the trip bar.
- If the temperature or current increases over a sustained peirod of time, the bimetallic element will bend, push the trip bar and release the latch. The circuit breaker will trip.
- If the current suddenly or rapidly increases enough, the magnetic element will attract the trip bar, relase the latch, and the circuit breaker will trip.
- Thermal Trip gives inverse time characteristic and Magnetic Circuit Breaker (instantaneous-trip circuit breaker) gives instantaneous-tripping.

**MCCB Rating :**

- 10 A to 1600 A

**Application :**

1. For Residential Load
2. For to heavy industrial loads

Scanned with CamScanner

3. For motor-circuit protection
4. AC/DC power distribution
5. Electrical machines
6. Protection for transformers, motors, generators

**Advantage :**

1. Economical, tried and tested technology.

**Disadvantage :**

1. The operating characteristics of the breaker may vary depending on the amibient temperature.
2. It needs particular time to trip.
3. Provide less flexibility of adjustment than electronic releases.

### 5.6.2 Electronic Release MCCB :

- Electronic or Static Release Moulded Case circuit breakers use power electronic circuitry to provide overcurrent protection.
- A coil, placed on each conductor, continuously measures the current in each of them..
- This information is processed by an electronic module which controls the tripping of the circuit breaker when the values of the settings are exceeded.
- Both the overload trip action and the short-circuit trip action of breakers with electronic trip units are achieved by the use of current transformers and solidstate circuitry that monitors the current and initiates tripping through a flux shunt trip when an overload or a short circuit is present.

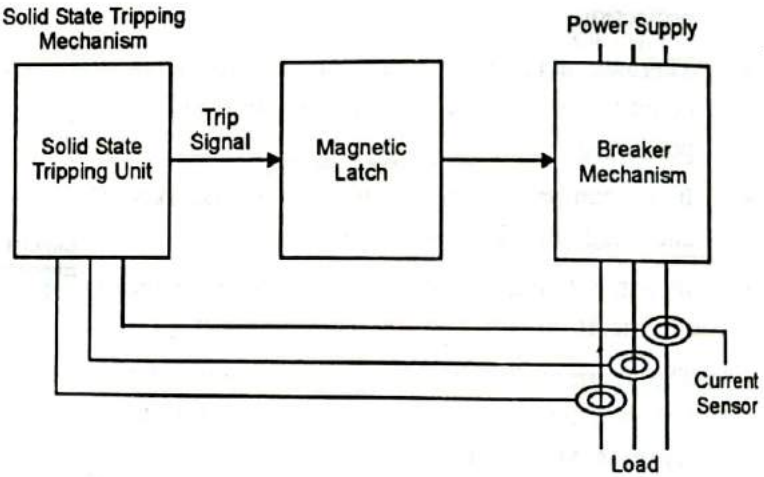


FIG. 5.8 : ELECTRONIC RELEASE MCCB

**MCCB Rating :**

- 20 A to 2500 A

**Advantage :**

1. The operating characteristic of the breaker is independent of the ambient temperature.
2. More accurate and more flexible settings.
3. Becoming standard for larger size breakers.
4. Ground fault easy to provide.

**Disadvantage :**

1. It is costly compare to Thermal Magnetic Release Type MCCB.

**Application :**

1. Electronic trip breakers are generally applied for applications where high elvels of system coordination.
2. Electronic trip breakers can provide superior protection and coordination as well as system alarms and diagnostics, monitoring and communications.

### 5.6.3 Mircroprocessor Release MCCB :

- Microprocessor release Moulded Case circuit breakers use microprocessors to provide overcurrent protection.

Scanned with CamScanner

- The Microprocessor relase works on monitoring of current True R.M.S. value. It is simulated and calculated from peak values, which installed microprocessor, can detect.
- It gives the very faster response than Thermal Magnetic Release Type MCCB.

**MCCB Rating :**

- 20 A to 2500 A.

**Advantage :**

1. High repeat accuracy and High reliability.
2. Provide coordination, Interlocking to other MCCB.
3. High Flexibility.

**Disadvantage :**

1. It is costly compare to Thermal Magnetic Release Type MCCB.

**Syllabus Topic :** Types of Wires

## 5.7 ELECTRICAL WIRES : GTU, May-2015, 2017

**GTU Questions**

1. Discuss the types of cables used for residential and commercial wiring. **[May-2015, 4-Marks]**
2. List out types of wiring system. **[May-2017, 1-Mark]**

- Now-a-days electricity has become necessity in our daily life.
- Electricity is generated in power house situated at far distance and then it is brought to the ulitisation stage like homes, shops, factories, railways etc.
- Electrical wiring is necessary for use of electricity at required place in such a way that safety of human-being is assured.

### 5.7.1 Types of Wires :

1. V.I.R. (Vulcanised India Rubber) wire
2. C.T.S. or TRS (Cab Tyre Sheathed or Tough Rubber Sheathed) wire
3. Weather proof wire
4. L.C. (Lead covered) wire
5. PVC (Poly Vinyl Chloride) wire
6. Flexible wire

### 1. VIR (Vulcanised India Rubber) wire :

- In this type of wires conductors are made up of aluminium or copper.
- A layer of vulcanized rubber is provided over it. There may one or two layers.

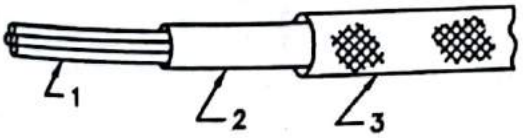


**1. Conductor 2. Rubber insulation 3. Braiding**

**FIG. 5.9 : SINGLE BRAIDED VIR WIRE**

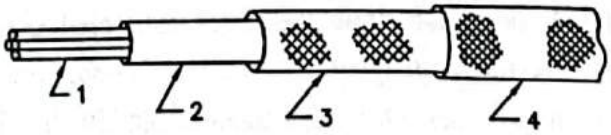


**1. Conductor 2. Rubber insulation 3. Braiding 4. Second layer of braiding**

**FIG. 5.10 : DOUBLE BRAIDED VIR WIRE**

Scanned with CamScanner

- Over this a cotton tape is wound and braiding of impregnated cotton is wound over it.
- This type of wire is used in casing-capping and conduit wiring.
- These types of wires are rarely used Now-a-days.

**2. CTS or TRS (Cab Tire Sheath or Tough Rubber Sheath) wire :**

- In this type of wire layer of strong and durable rubber is provided over the conductor.
- Its mechanical strength is more than that of the VIR wire.
- Effect of heat, moisture and water is less on it. This type of wire is available in varieties of single core, twin cores and three cores.
- It is used in house wiring and industrial wiring.

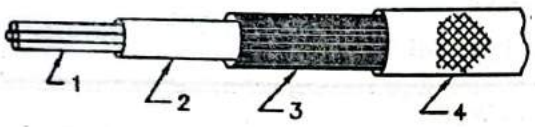


**1. Conductor 2. Rubber insulation**
**3. Rubber sheath 4. Braiding**

**FIG. 5.11 : SINGLE CORE TRS WIRE**

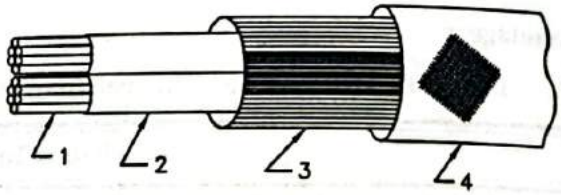


**1. Conductor 2. Rubber insulation**
**3. Rubber sheath 4. Braiding**

**FIG. 5.12 : TWIN CORE TRS WIRE**

**3. Weather proof wire :**

- On this type of wire there is no effect of atmosphere. A layer of rubber is provided on copper conductor. Braiding of cotton is provided on this. It is made waterproof by dipping it into waterproof compound.
- This type of wire is available in single core or double core types. Outer sheath is inflammable so it is not used in casing-capping-type wiring and the places where there are inflammable materials.
- It is useful in service connections. Its use is now-a-days has become limited.

**4. LC (Lead Covered) wire :**

- In this type of wire coating of insulated rubber is provided on the conductor. A tube made of lead is kept over it.
- Due to lead there is no effect of moisture on the rubber. So it is used in the place where there is presence of moisture.
- As lead is soft, it is easily affected by mechanical stresses. So care has to be taken while using it. This wire can be used directly on wooden batten.

**5. PVC (Poly Vinyl Chloride) wire :**

- In this type of wire insulation made of poly vinyl chloride is provided over copper or aluminium conductor.
- The following advantages can be obtained by using PVC as insulation :
  (1) Its dielectric strength is more.
  (2) Its mechanical strength is more.
  (3) There is good protection against moisture.
  (4) It does not allow the flame to spread over it.
  (5) Its life is long.
  (6) It provides protection against oil, alkali, acid etc.
  (7) It provides protection against insects and termites.
  (8) There is no ill effect of vibrations etc.

Scanned with CamScanner

- Due to all above advantages PVC wires are widely used and use of paper and rubber insulated wires is reduced. This type of wire is manufactured for voltage rating of 11 kV. It is available in single PVC and double PVC types.

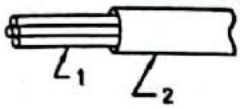


1. Conductor 2. PVC insulation

**FIG. 5.13 : SINGLE PVC WIRE**

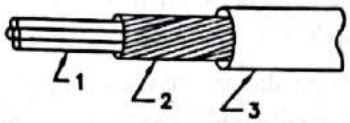


1. Conductor 2. PVC insulation 3. PVC sheath

**FIG. 5.14 : DOUBLE PVC WIRE**

**6. Flexible wire :**

- In this type of wire instead of using thick conductor many thin copper conductors of 36 gauge are used. This is called stranding.
- These strands are twisted and PVC insulation is provided over it.
- Such two wires of different colours of insulation are twisted together and coil is prepared.

**FIG. 5.15 : FLEXIBLE WIRE**

- As the flexible wire is used instead of thick wire, the wire can be bent in any direction.
- This type of wire is used in giving connections to table lamp, fan, tube light etc.

**Syllabus Topic : Types of Cables**

## 5.8 TYPES OF CABLES :

**GTU, May-2011, 2013 2016, 2018, 2019; Dec. 2010, 2013, 2014; Jan. 2020; Dec. 2020**

**GTU Questions**

1. Explain the construction of a cable with functions of its various parts with the help of neat diagram. **[December-2010, January-2020, December-2020, 4-Marks]**
2. Explain with neat sketch general construction cable. **[May-2011, 5-Marks]**
3. Explain construction of cable. **[May-2013, 5-Marks]**
4. Explain construction of cable in detail. **[December-2013, 7-Marks]**
5. Define cable and explain its construction with neat sketch diagram. **[December-2014, 4-Marks]**
6. Explain construction of cable in detail. **[May-2016, 2018, 7-Marks]**
7. State function of various parts of HT cable. **[May-2019, 3-Marks]**

- A cable is made up of solid or stranded conducting material (copper or aluminium) surrounded by insulation and a sheath giving it mechanical protection.

### 5.8.1 Construction of Cables :

- General construction of underground cable is shown in Fig. 5.16. Its main parts are as follows.

1. Core
2. Insulation
3. Metallic sheath
4. Bedding
5. Armouring
6. Serving

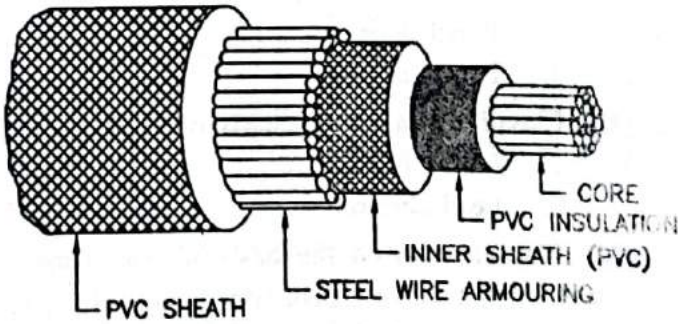


**FIG. 5.16 : CONSTRUCTION OF SINGLE CORE PVC CABLE**



Scanned with CamScanner

1. **Core :**

- Function of the core is to carry current.

2. **Insulation :**

- Insulation is necessary between the conductor and the earth in single core cable and between conductors and between conductors and earth in multi-core cable.
- Different types of insulation are used. Paper, varnished rubber, oil impregnated paper, PVC, metalized paper etc. are used as insulation.

3. **Metallic sheath :**

- Moisture is the major enemy of insulation. Dielectric strength of insulation decreases when moisture enters the insulation. So it should be seen that the moisture does not enter the insulation.
- For this, sheath of lead or lead alloy is provided over the insulation. Sometimes sheath of aluminium is provided when the core is made of copper.

4. **Bedding :**

- Bedding is used to protect the sheath from mechanical damage. Tape of jute is wound over the sheath.

5. **Armouring :**

- Armouring is used to protect the cable from mechanical damage. For this, two layers of steel tapes or two layers of galvanized steel wires are wound over the bedding.

6. **Serving :**

- Layer of jute is provided over the armouring, which is called serving.

### 5.8.2 Classification of Cables :

- Classification of cables is done on various bases. On these bases, the cables are classified in to the following.

**[A] Classification on the basis of number of core :**

1. 1 Core 2. 2 Core 3. 3 Core 4. $3\frac{1}{2}$ Core 5. 4 Core

**[B] Classification on the basis of voltage :**

1. LT (Low tension) cable-Operating voltage up to 1000 V
2. HT (High tension) cable-Operating voltage up to 11 000 V
3. ST (Super tension) cable-Operating voltage up to 33 000 V
4. EHT (Extra high tension) cable-Operating voltage 66 000 V
5. ESV (Extra super voltage) cable-Operating voltage 132 000 V

**[C] Classification on the basis of application :**

1. Power cable-Used for the transmission and distribution of power.
2. Control cable-Used for the transmission of control signals.

**[D] Classification on the basis of insulation :**

1. Rubber insulated.
2. PVC insulated.
3. Polythelene insulated.
4. Varnished cambric insulated.
5. Paper insulated.

**[E] Classification on the basis of sheath :**

1. PVC sheathed.
2. Lead sheathed.
3. Lead alloyed sheathed.
4. Aluminium sheathed.

**[F] Classification on the basis of armouring :**

1. Single layer steel wire armoured
2. Double layer steel wire armoured
3. Double layer steel tape armoured

Scanned with CamScanner

**[G] Classification on the basis of construction :**

1. Low tension cable
2. Belted cable
3. Screened or H type cable
4. SL type cable
5. HSL type cable
6. Super tension cable
   (a) Oil filled cable
   (b) Gas pressure cable

## 5.9 EARTHING :

**GTU, Jan. 2017, Dec. 2010, 2012, 2015, May-2018**

**GTU Questions**

1. What is an electric shock ? Why grounding is required ? **[December-2010, 4-Marks]**
2. What is the need of earthing ? Explain the different method of earthing. **[December-2012, 7-Marks]**
3. What is earthing ? **[December-2015, 4-Marks]**
4. What is earthing ? **[May-2018, 4-Marks]**

**Definition of Electrical Earthing :**

- The process of transferring the immediate discharge of the electrical energy directly to the earth by the help of the low resistance wire is known as the electrical earthing.
- According to Indian Electricity Rules the earthing is defined as :

  "the earthed or connected with earth means connection with the general mass of the earth in such manner as to ensure at all times an immediate discharge of energy without danger."

**Purpose of Earthing :**

- The basic purpose of earthing is to achieve the following objectives :
  1. To save human life from danger or shock or death by blowing fuse of any apparatus which becomes leaky.
  2. To protect all machines fed from over head lines from lightning.
  3. To protect large buildings from atmospheric lightning.
  4. To maintain the line voltage constant (since neutral of every alternator, transformer is earthed.)
- To illustrate the purpose of earthing, consider an electric circuit shown in Fig. 5.17 where an electrical appliance of resistance R is connected to the supply through a fuse and a switch.
- When the operator touches the metallic body of the apparatus [Fig. 5.17(a)] having perfect insulation, the equivalent circuit is shown in Fig. 5.17(b), where two parallel paths are formed.
- Since the insulation resistance $R_i$ is very high as compared to the appliance resistance R, whole of the current flows through the appliance resistance and no current flows through human body (operator's body) resistance.

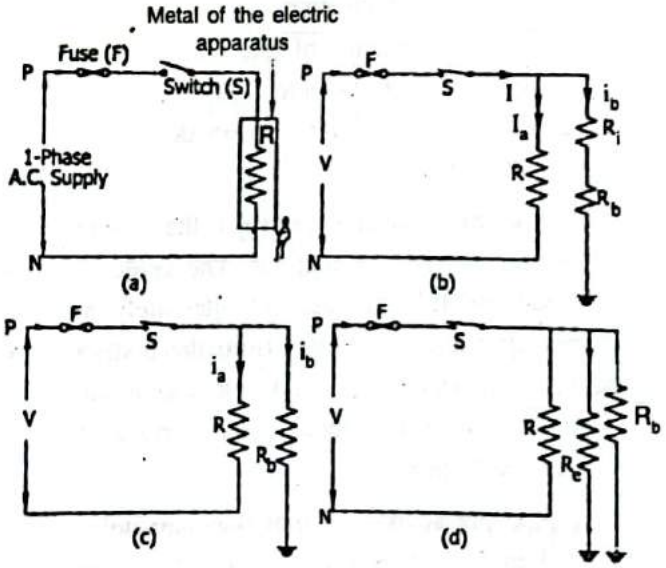


FIG. 5.17

- When earth fault occurs the live (phase) wire directly comes in contact with the outer body and the insulation resistance is reduced to zero as shown in Fig. 5.17(c). Now the body resistance is just in parallel with the appliance resistance. A heavy current flows through the human body and operator gets a severe shock.

Scanned with CamScanner

- However, if the metallic body or outer frame of the appliance is properly earthed, under this condition the circuit will be as shown in Fig. 5.17(d) where earth resistance $R_e$ is just in parallel with the appliance resistance R and body resistance $R_b$.
- Since earth resistance is very small as compared to body resistance almost whole of the fault current flows through the earth resistance and no current flows through the human body. Thus, the operator is protected from electric shock.

### 5.9.1 Various Methods of Earthing :

**1. Pipe Earthing :** **GTU, January-2019; May-2011, 2014; Dec. 2012, 2016, 2020**

**GTU Questions**

1. State and explain plate and pipe earthing with neat diagram. **[May-2011, 7-Marks]**
2. What is the need of earthing ? Explain the different method of earthing. **[Dec. 2012, 2020, 7-Marks]**
3. What is the purpose of structure earthing ? Discuss pipe and plate type earthings. **[May-2014, 7-Marks]**
4. What are the different methods of earthing ? Elaborate pipe earthing method with the help of diagram. **[December-2016, 7-Marks]**
5. Briefly describe pipe earthing. **[January-2019, 3-Marks]**

- The pipe used as earth electrode is galvanized and perforated. According to I. S. I. standard specification No. 732 – 1963, the galvanized pipe shall not be less than 38 mm diameter and 2 metre long for ordinary soil but if the soil is dry and rocky, the length of the pipe to be embedded should be increased to 2.75 metres.
- The diameter of the pipe has very little effect on the resistance of the earth connection. The pipe must be placed in a permanently wet ground.
- The depth at which the pipe should be burried depends upon condition of soil and moisture. According to I. S. I. the pipe should be placed at a depth of 4.75 metres again depending upon moisture.
- The pipe having tapered casting at the bottom is placed up right in that pit. The charcoal and salt are filled in that pit alternately in layers upto about 2 metres from the bottom and for a distance of about 15 cm around the pipe to increase dampness and moisture around each pipe.
- The pipe placed has 12 mm diameter holes drilled in it so that water poured from top is made to spread in the charcoal layers through the holes to decrease earth resistance accordingly. The pit of about 40 $cm^2$ is dug in the soil.

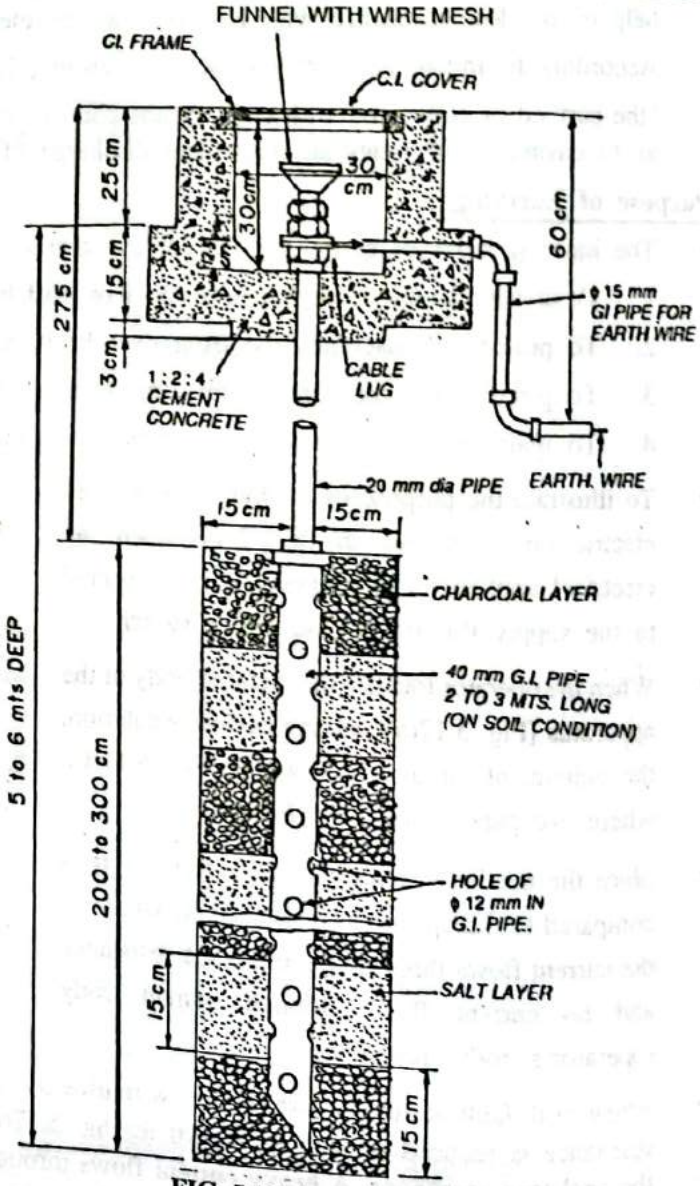


**FIG. 5.18 : PIPE EARTHING**

Scanned with CamScanner

- At the top, a cement concrete work is made for the production of earth pipe from mechanical damage and also to facilitate water pouring arrangements for provision of dampness.
- A funnel with wire mesh is provided in the concrete work so that water is put through that funnel in order to have an effective earth. The pipe to which funnel is connected is further connected to main earthing pipe.
- Another G. I. pipe is taken from the funnel towards outer side for its connection to earth wire. According to I. S. I. specifications, a G. I. wire of size not less than 8 S. W. G. should be used for earthing in case of small installations.
- The earth wire from the G. I. pipe of 19 mm diameter should be carried in a G. I. pipe of diameter 12.7 mm at a depth of about 60 cm below the ground.
- The size of continuous earth wire used with cables in domestic installation should not be less than 14 S. W. G. in any case. It is important to mention that the earth wire must be electrically continuous.

**Application :**

- It is mostly used for :
  1. Residential areas.
  2. Commercial areas.

**Advantages :**

1. Simple design.
2. Easy to intall in good soils.
3. Hardware readily available.

**Disadvantages :**

1. High impedance.
2. Hard to install in rocky soil.

## 2. Plate Earthing :

**GTU, May-2010, 2014, 2019; Dec. 2012, 2017**

**GTU Questions**

1. State and explain plate and pipe earthing with neat diagram. **[May-2010, 7-Marks]**
2. What is the need of earthing ? Explain the different method of earthing. **[December-2012, 7-Marks]**
3. What is the purpose of structure earthing ? Discuss pipe and plate type earthings. **[May-2014, 7-Marks]**
4. What is plate earthign and how it is done ? **[December-2017, 7-Marks]**
5. Explain plate earthing with diagram. **[May-2019, 7-Marks]**

- This is also one of the common system of earthing.
- In this case, the earthing is done by embedding G. I. or copper plate in the earth sufficiently deep. The size of the plate used should not be less than 60 cm × 60 cm × 6.35 mm in case of G. I. (galvanized iron) plate and 60 cm × 60 cm × 3.18 mm in case of copper plate. The copper on account of its high cost is not used nowadays.
- A pit is dug about 4 metres deep (depending upon soil conditions in regard to dampness) and the earth electrode is placed in such a way that its face is vertical.
- The space around the plate is filled with layers of charcoal and salt for a minimum thickness of 15 cm.
- The electrode or plate is connected to G. I. pipe of 12.7 mm diameter for carrying G. I. each wire for connection to earth electrode.

Scanned with CamScanner

- The earth wire is securely bolted to the earth plate with the help of bolt, nut, washer and G. I. thimble, the details of which is shown in the diagram.
- It should be remembered that the nut and bolts thimble and washers must be of copper for copper plate and G. I. for galvanized earth plate or electrode.
- The pit filled with charcoal and salt is also connected with a pipe for carrying water from concrete work so that area for the purpose of increasing dampness and moisture which ultimately reduce earth resistance.
- The cement work is covered with iron plate for periodic opening. It is better to have an independent earth plate in domestic installation. The diagram is given in Fig. 12.3 showing details of plate earthing with dimensions.

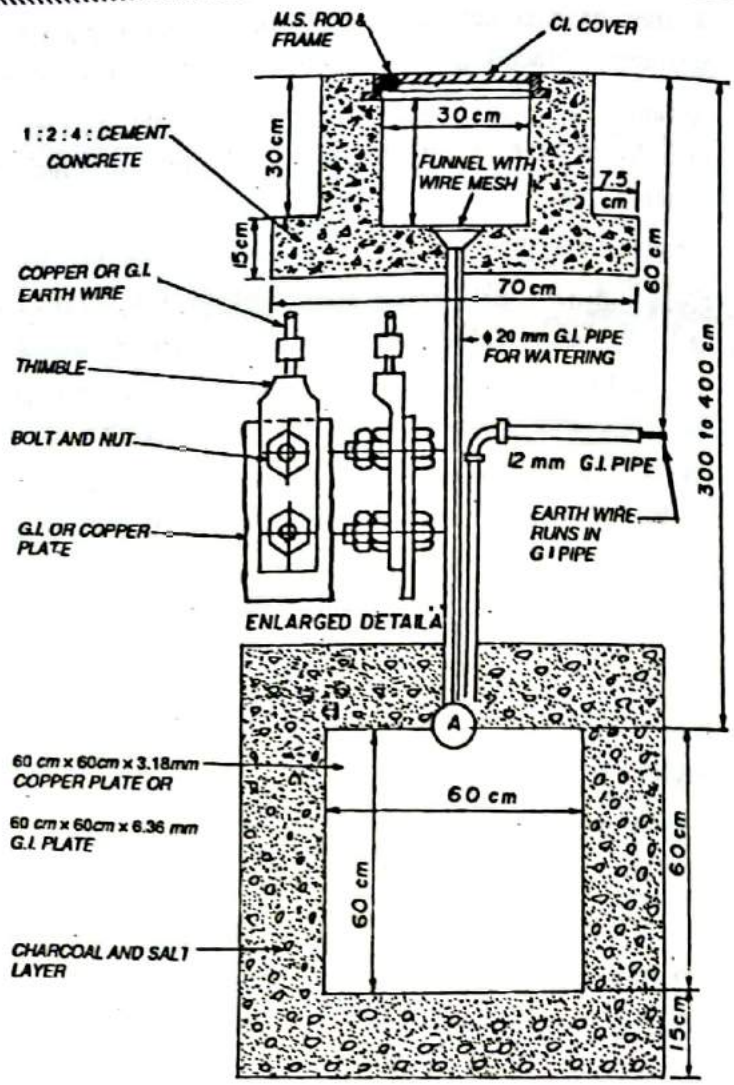


FIG. 5.19 : PLATE EARTHING

**Application :**

- It is mostly used for :
  1. Industrial areas
  2. Generators
  3. Transformers
  4. UPS

**Advantages :**

1. Can achieve low resistance contact in limited area Easy to install ingood soils.
2. Higher Efficiency.

**Disadvantages :**

1. Most difficult to install.
2. Should be instealled vertically.

**Syllabus Topic :** Safely Precautions of Electrical Appliances

## 5.10 SAFETY PRECAUTION FOR ELECTRICAL APPLIANCES :

**GTU, January-2020**

**GTU Questions**

**1.** Write safety precaution for electrical appliances. **[January-2020, 4-Marks]**

- Unless we take safety precautions while working with electricity, it may result into a fatal accident. So following precautions should be taken while working with the electricity.
  1. The electric shocks are usually received and can be easily avoided by being careful.
  2. A great care should be taken against electric shock while working on the line whether its conductor is insulated or bared.
  3. Never work with bare feet. It is better to wear rubber shoes while working.

Scanned with CamScanner

4. In case of electric shock, when a victim is still in contact with the live wire which you cannot immediately switch off, insulate yourself on a dry wood or any other insulating material to release the victim.
5. Use safety belt before starting the work on an electric pole or tower.
6. The ladder should always be held by another person while working on overhead lines, so that it may not slip away.
7. Phase or positive wire should always be connected through the switch.
8. Before energizing the line, check that there is none working on the main line.
9. Before replacing the blown fuse, always switch off the main switch.
10. Before taking a tables fan or portable appliances from one place to another, disconnect it from the supply.
11. Do not disconnect the flexible wire of an electrical equipment from the socket by pulling it out.
12. Do not touch electric installation without any purpose.
13. Overhead lines should never be touched unless you are sure that it is dead and properly earthed.
14. Before starting the work, ensure that you are authorized to do the work.
15. Do not tamper electrical protective or interlocking gear unless you are authorized.
16. Safety depends upon good earthing, always keep earth connection in good condition.
17. The battery charging room should be lighted and airy.
18. When preparing an electrolyte, the acid should be added in to the water and not the water to the acid.
19. Do not charge the battery in a dark room.
20. In case of fire, do not throw water on a live wire and equipment, it is dangerous. The best remedy is to disconnect the main supply immediately.
21. The electric fire should be extinguished with liquid carbon dioxide type extinguisher or dry sand.

**Syllabus Topic : Batteries**

## 5.11 BATTERIES : GTU, May-2016; December-2020

**GTU Questions**

1. What is battery ? Explain the construction and working of any battery. **[May-2016, December-2020, 4-Marks]**

- When a current passes through an electrolyte solution, chemical reaction occurs i.e. electrical energy is converted into chemical energy. Conversely, chemical energy can also be converted into electrical energy.
- The device which is capable of carrying out these conversions is called cell.
- The combination of two or more than two cells, suitably connected together is called a battery.
- The cells are connected to each other either in series or in parallel or in some combination of series and parallel depending on the amount of voltage and current required to be delivered by the battery.
- For example a 12 V battery used in a car consists of 6 cells of 2 V each connected in series. For a circuit, if higher voltage is required a battery containing number of cells connected in series is applied.
- If higher current is required a battery containing number of cells connected in parallel is applied.
- If larger current and higher voltage is required, a battery containing number of cells in series and further connected in parallel is applied.

Scanned with CamScanner

## 5.12 LEAD-ACID BATTERY :

GTU, May-2011; December-2010, 2015, 2016

**GTU Questions**

1. What is battery ? Explain the construction and working of any battery. **[December-2010, 7-Marks]**
2. Explain with neat sketch construction and working of lead acid battery. **[May-2011, 7-Marks]**
3. Discuss the lead acid battery with charging and discharging equations. **[December-2015, 7-Marks]**
4. Discuss the working of a Lead Acid Battery. **[December-2017, 7-Marks]**

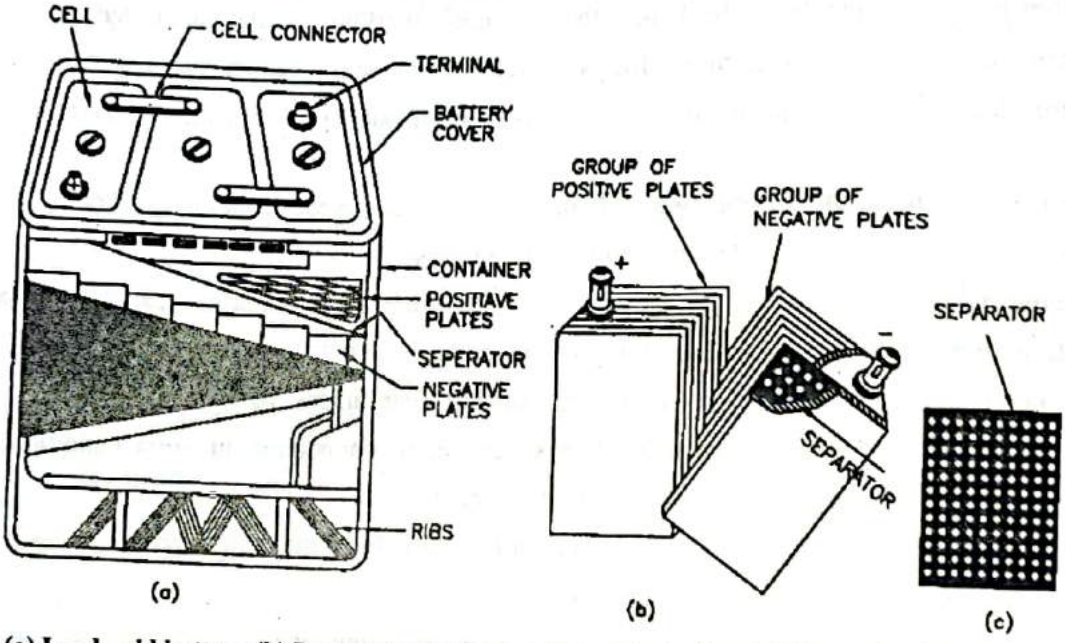


**(a) Lead-acid battery (b) Positive and negative plates of a battery (c) Separator in a battery**

**FIG. 5.20**

- Fig. 5.20(a) shows the cut-away view of 6 V commercial lead-acid battery. Following are the important parts of the battery.

1. **Container :** It is the outer body of the battery. It is made of a hard rubber or plastic material.
2. **Plates :** To increase the capacity of the battery, we use a large number of plates in each cell instead of only two plates. The number of positive plates and negative plates of each cell are alternately placed and sandwitched with an insulator called separator as shown in Fig. 5.20(b).
3. **Separator :** To reduce the internal resistance of the cell and to save space, the plates are placed very close to each other. To prevent the plates touching each other if they wrap or buckle they are separated by a rubber sheet (non-conducting material) having large number of holes called separator as shown in Fig. 5.20(c).
4. **Electrolyte :** Dilute sulphuric-acid ($H_2SO_4$) is used as an electrolyte in lead-acid batteries.
5. **Battery cover :** Each cell compartment is covered usually with a molded hard rubber and joints between covers and container are sealed with an acid-resistant material.
6. **Cell connector :** The cells, placed in the same container are connected in series with a lead alloy link called inter-cell connector.
7. **Cell terminals :** Each cell has two terminals which are generally made of lead as it does not corrode due to the electrolyte. The positive terminal of the battery is marked with a red colour or by a large positive (+) sign.

Scanned with CamScanner

**Chemical action during charging :**

- When sulphuric acid is dissolved, its molecules are dissociated into hydrogen ions ($2H^+$) and sulphate iron ($SO_4^-$) which move freely (at random) in the electrolyte.
- When the load (resistor) is connected across the terminals as shown in Fig. 5.21, the sulphate ions move towards cathode and hydrogen ions towards the anode. The following chemical action takes place at cathode and anode.

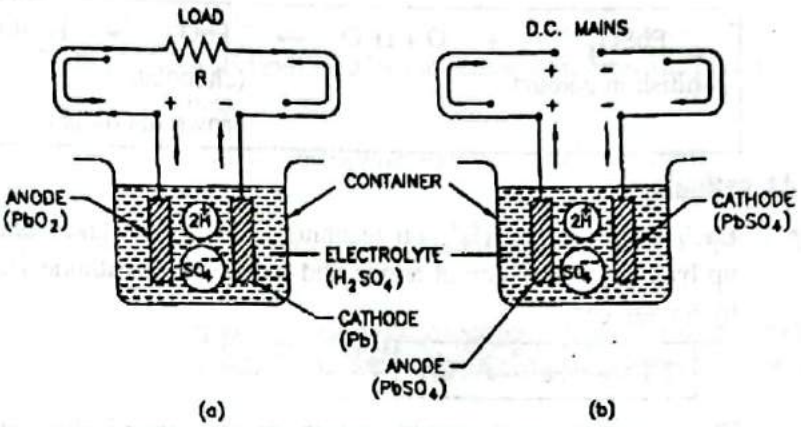


FIG. 5.21 : LEAD ACID CELL

**At cathode :**

- $SO_4^- - 2e = SO_4$ (radical). The electrons travel through external load and after doing work reach at cathode. The sulphate radical, chemically reacts with cathode material (Pb) and forms lead sulphate ($Pb\ SO_4$)

| | | | | |
|---|---|---|---|---|
| Pb | + | $SO_4$ | → | $Pb\ SO_4$ |
| Grey in colour | | | | whitish in colour |

**At Anode :**

- Each hydrogen ion ($H^+$) on reaching the anode, takes one electron (the same electron which is given up by the sulphate ion at cathode and has come to anode via external load resistor) from it to become hydrogen gas

  i.e. $2H^+ + 2\bar{e} = 2H$

- The hydrogen gas liberated at anode acts chemically with anode material ($PbO_2$) and reduces it to PbO which further reacts with $H_2SO_4$ forming $PbSO_4$.

$$PbO_2 + 2H \rightarrow PbO + H_2O$$

(chocolate brown in colour)

$$PbO + H_2SO_4 \rightarrow Pb\ SO_4 + H_2O$$

(whitish in colour)

**Chemical action during recharging :**

- For recharging, anode is connected to positive terminal of the source and cathode is connected to the negative terminal as shown in Fig. 5.21.
- During recharging hydrogen ions ($2H^+$) move towards the cathode and sulphate ions ($SO_4^{--}$) towards the anode. The following chemical actions take place at the two plates :

**At Anode :**

$$SO_4^{--} - 2e \rightarrow SO_4 \text{ (radical)}$$

$$SO_4 + H_2O \rightarrow H_2SO_4 + O^{\bullet}$$



Scanned with CamScanner

- The oxygen reacts chemically with anode material ($PbSO_4$)

$$\underset{\text{(whitish in colour)}}{PbSO_4} + O + H_2O \rightarrow \underset{\text{(chocolate brown in colour)}}{PbO_2} + H_2SO_4$$

**At cathode :**

- Each hydrogen ion ($H^+$) on reaching the cathode, takes one electron - the same electron which is given up by the sulphate ion at anode and has come to cathode via external circuit i.e. source from it to become hydrogen gas,

$$2H^+ + 2e \rightarrow 2H$$

- The hydrogen gas liberated at cathode acts chemically with cathode material ($PbSO_4$).

$$\underset{\text{(Whitish in colour)}}{PbSO_4} + 2H \rightarrow Pb + \underset{\text{(Grey in colour)}}{H_2SO_4}$$

**Application of a lead -acid battery :**

- The lead-acid batteries have innumerable commercial applications. Some of the important applications are given below :
  1. Used in automobiles for starting and lighting
  2. For lighting on steam and diesel railway trains.
  3. Used at generating stations and substations for operation of protecting devices and for emergency light.
  4. Used at telephone exchanges.
  5. Used for emergency lighting at important places such as hospital, theatres, banks etc.
  6. Used for lighting purposes in remote rural areas.

## 5.13 LIFE OF BATTERY :

- The average life of a lead-acid battery is two to four years depending upon its manufacturing qualities and techniques. However, to obtain longer life and efficient service, the following points must be kept in view :
  1. The battery should not be allowed to use when the emf of the battery falls to 1.88 per cell. Otherwise, the lead sulphate of the plates partly changes to non-active lead sulphate and damage the battery.
  2. The specific gravity to the electrolyte should not be allowed to fall below 1.15.
  3. The battery should never be left standing in a discharged condition, otherwise sulphation will occur and the battery cells are permanently damaged.
  4. When not in use, the battery must be fully charged and stored in a cool and dry place.
  5. Great care should be taken that the acid used as electrolyte should not contain any substantial impurity.
  6. The electrodes must remain completely immersed in the electrolyte, preferably the level of electrolyte should always be about 10 mm above the electrodes.
  7. Whenever the level of the electrolyte decreases due to evaporation or gassing, distilled water should be added so as to keep the same concentration of electrolyte.
  8. The battery should be charged and discharged at low rate so that its temperature may not rise above 45°C. The high temperature may buckle the plates and damage the separators and the battery may be totally damaged.

Scanned with CamScanner

9. The battery terminals should never be short circuited.
10. While charging, the polarity must be checked carefully.
11. The room where the batteries are charged should be well ventilated as the atmosphere near the batteries would be charged with the corresponding acid fumes.
12. The flames must be kept away from the vent of the battery, otherwise hydrogen and oxygen produced within the battery cells may get fire.
13. The battery terminals should always he kept clean and periodically greased with vaseline to prevent corrosion.

## 5.14 EFFICIENCY OF BATTERY : GTU, May-2015, 2016, 2017; December-2015

**GTU Questions**

1. Explain in brief the following : A-h and W-h capacity of a battery. **[May-2015, December-2015, 1-Mark]**
2. Define A-H efficiency. **[May-2016, 1-Mark]**
3. Define ampere hour efficiency of battery. **[May-2017, 1-Mark]**

### 1. Ampere hour efficiency : GTU, May-2015

- The ratio of output amp-hours during discharing to the input ampere-hours during charging of the battery is called quantity or ampere-hour efficiency of the battery.
- Mathematically, $\boxed{\eta_{AH} = \frac{I_d T_d}{I_c T_c}}$

where, $I_d$ = discharing current in amperes

$T_d$ = discharing time in hours

$I_c$ = charing current in amperes

$T_c$ = charing time in hours

### 2. Watt-hour efficiency of a battery : GTU, May-2015

- The ratio of output watt-hours during discharing to the input watt-hours during charging of the battery is called energy or watt-hour efficiency of the battery.
- Mathematically, $\boxed{\eta_{WH} = \frac{I_d T_d V_d}{I_c T_c V_c}}$

where, $V_d$ = Average terminal voltage during discharging

$V_c$ = Average terminal voltage during charging

## 5.15 CHARGING METHODS : GTU, May-2014, Dec. 2015; Jan. 2020

**GTU Questions**

1. Explain the process of charging and discharging of lead acid cell. **[May-2014, Jan. 2020, 7-Marks]**
2. Discuss the lead acid battery with charging and discharging equations. **[December-2015, 4-Marks]**

### 1. Constant current method :

- In this method, the charging current supplied to the battery is kept constant throughout the charging period by adjusting the value of variable resistor $R$ as shown in Fig. 5.22.

Scanned with CamScanner

- At the beginning of the charging, current supplied to the battery

$$I = \frac{V - n E_1}{R_1 + nr}$$

Where, $n$ = No. of cells in series

$E_1$ = e.m.f. of each cell in the beginning.

$r$ = internal resistance of each cell

$R_1$ = initial value of series resistor

or $$R_1 = \frac{V - n E_1}{I} - n r$$

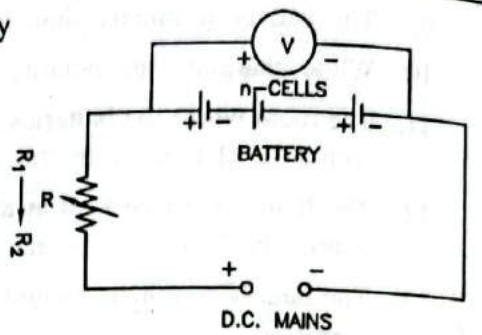


**FIG. 5.22 : CONSTANT CURRENT METHOD OF CHARGING A BATTERY**

- As the battery is charged, the emf developed in each cell starts increasing which decreases the circuit current.
- To maintain the current constant, the value of series resistor is decreased gradually. Finally, when the battery is fully charged, let the emf developed per cell be $E_2$ and the value of series resistance be $R_2$. Then,

$$R_2 = \frac{V - n E_2}{I} - n r$$

**2. Constant voltage method :**

- In this method, the supply voltage for charging of battery is kept constant. A fixed resistance $R$ is connected in series with the battery as shown in Fig. 5.23 to limit the current supplied to the battery in the beginning.
- In this case, the battery draws heavy current $I_1$ in the beginning which reduces to $I_2$ finally when the battery is fully charged.

$$I_1 = \frac{V - n E_1}{R + n r}$$

**OR**

$$I_2 = \frac{V - n E_2}{R + n r}$$

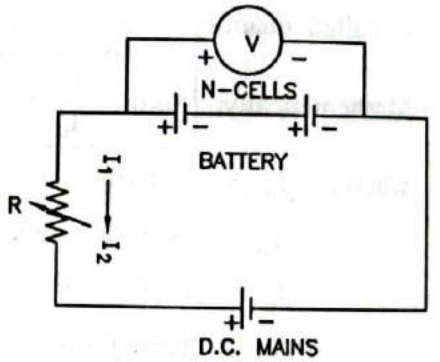


**FIG. 5.23 : CONSTANT VOLTAGE METHOD OF CHARGING A BATTERY**

- This method of battery charging is applied commercially as total time required for complete charging is far less (nearly half) than for constant current method. Moreover, no attendent is required to vary the series resistance.

**Syllabus Topic :** Important Characteristics of Batteries

## 5.16 IMPORTANT CHARACTERISTICS OF BATTERIES :

**GTU, May-2010, 2017, 2019**

**GTU Questions**

1. Discuss electrical characteristics of batteries.. [May-2010, 4-Marks]
2. Explain the specificatins of battery. [May-2017, 3-Marks]
3. State and explain in brief important electrical characteristics of battery. [May-2019, 4-Marks]

**1. Cell and battery voltages :**

- All electric cells have nominal voltages which gives the approximate voltage when the cell is delivering electrical power.
- The cells can be connected in series to give the overall voltage require.

Scanned with CamScanner

- The 'internal resistance' and the equivalent circuit of a battery is shown in Fig. 5.24.
- The battery is represented as having a fixed voltage E, but the voltage at the terminals that different voltage V, because of the voltage across the internal resistance R. Assuming that a current I is flowing out of the battery, as in Fig. 5.24, then by basic circuit theory we can say that :

$$V = E - IR \quad (5.1)$$

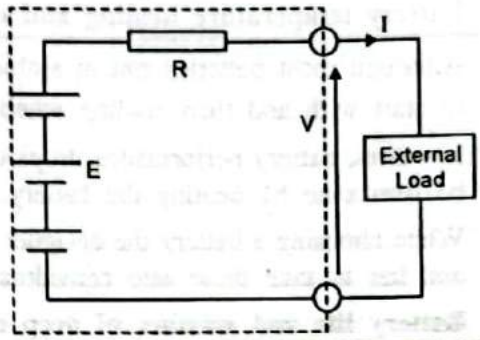


**FIG. 5.24 : SIMPLE EQUIVALENT CIRCUIT MODEL OF A BATTERY THIS BATTERY IS COMPOSED OF SIX CELLS**

**2. Charge (or Ahr) capacity :**

- The electric charge that a battery an supply is clearly a most crucial parameter. The SI unit for this is the Coulomb, the charge when one Amp flows for one second. The capacity of a battery might be, say, 10 Amp hours. This means it can provide 1 Amp for 10 hours.

**3. Energy stored :**

- The energy stored in a battery depends on its voltage, and the charge stored. The SI unit is the joule, but this is an inconveniently small unit, and so we use the Whr instead.

$$\text{Energy in Whr} = V \times \text{Ahr}$$

**4. Specific energy :**

- Specific energy is the amount of electrical energy stored for every kilogram of battery mass. It has units of $Wh.kg^{-1}$.

**5. Energy density :**

- Energy density is the amount of electrical energy stored per cubic metre of battery volume. It normally has units of $Wh.m^{-3}$.

**6. Specific power :**

- Specific power is the amount of power obtained per kilogram of battery. It is a highly variable and rather anomalous quantity, since the power given out by the battery depends far more upon the load connected to it than the battery itself.

**7. Ahr (or charge) efficiency :**

- In an ideal world a battery would return the entire charge put into it, in which case the amp hour efficiency is 100%.
- However, no battery does; its charging efficiency is less than 100%. The precise value will vary with different types of battery, temperature and rate of charge. It will also vary with the state of charge.

**8. Energy efficiency :**

- This is another very important parameter and it is defined as the ratio of electrical energy supplied by a battery to this amount of electrical energy required to return it to the state before discharge.

**9. Self-discharge rates :**

- Most batteries discharge when left unused, and this is known as self-discharge. This is important as it means some batteries cannot be left for long period without recharging. The rate varies with battery type, and with other factors such as temperature; higher temperature greatly increase self-discharge.

Scanned with CamScanner

**10. Battery temperature heating and cooling needs :**

- Although most batteries run at ambient temperature, some run at higher temperatures and need heating to start with and then cooling when in use.
- In others, battery performance drops off at low temperatures, which is undesirable, but this problem could be overcome by heating the battery.
- When choosing a battery the designer needs to be aware of battery temperature, heating and cooling needs, and has to take these into consideration during the vehicle, design process.

**11. Battery life and number of deep cycles :**

- Most rechargeable batteries will only undergo a few hundred deep cycles to 20% of the battery charge. However, the exact number depends on the battery type, and also on the details of the battery design, and on how the battery is used.
- This is a very important figure in a battery specification, as it reflects in the lifetime of the battery, which in turn reflects in electric vehicle running costs.

**Syllabus Topic :** Elementary Calculations for Energy Consumption

## 5.17. POWER RATING OF ELECTRICAL APPLIANCES :

- Power is equal to the supplied voltage multiplied by the current draw.

$$\boxed{P\text{ (power)} = I\text{ (amps)} \times V\text{ (volts)}}$$

- The power rating is expressed in either Watts or Kilowatts.

**Table-5.1 : Electrical Equipment typical power consumption table**

| Electrical Equipment | Power rating of equipment (watts) |
|---|---|
| Incandescent lamps | 40W, 60W, 100W, 200W, 500W |
| Fluorescent tube (with magnetic ballast) | 55W |
| Fluorescent tube (with electronic ballast) | 36W |
| CFL (Compact Flourescent Lamp) | 7W, 9W, 11W, 18W, 23W |
| Ceiling fan 48" | 60W |
| Ceiling fan 36" | 40 W |
| Electric Iron | 750W, 500 W |
| Heater/geyser | 1000W, 2000W, 3000W |
| Air conditioner (1 ton) | 1400W |
| Refrigerator above 165 litre | 300W |
| Refeigerator upto 165 litre | 225W |
| Washing Machine | 200W |
| Television | 250 W to 150 W |
| Computer | 100W |
| Microwave oven | 1000W to 1500W |
| For street lighting | |
| High pressure mercury lamps | 250W |
| high pressure sodium lamps | 150W |
| Halogen lamps | 20W, 50W, 100W, 300W, 500W |

Scanned with CamScanner

**Example-5.1 :**

**A bunglow has Following load connected in it**

**(1) 40 Watt tube lights - 12 Nos, switched on for 4 hours/day**

**(2) 60 Watt ceiling fan - 7 Nos, switched on for 6 hours/day**

**(3) 100 Watt 165 liter refrigerator, switched on 12 hours/day**

**(4) 100 Watt T.V set, switched on 5 hours/day**

**(5) 40 Watt computer, switched on 8 hours/day**

**(6) 500 Watt A.C - 2 Nos, switched on 6 hours/day**

**(7) 100 Watt water pump, switched on 2 hours/day**

**Estimate the monthly electricity bill of the bunglow it energy cost is ₹ 5 per unit.**

***Solution :***

| Sr. No. | Item | Wattage | Nos. | Working Hrs per day | Energy consumption in Watt-Hrs, per day |
|---|---|---|---|---|---|
| 1 | Tubelight | 40 | 12 | 4 | 40 × 12 × 4 = 1920 |
| 2 | Ceiling Fans | 60 | 7 | 6 | 60 × 7 × 6 = 2520 |
| 3 | Refrigerator | 100 | 1 | 12 | 100 × 1 × 12 = 1200 |
| 4 | T.V. Set | 100 | 1 | 5 | 100 × 1 × 5 = 500 |
| 5 | Computer | 40 | 1 | 8 | 40 × 1 × 8 = 320 |
| 6 | A.C.s | 500 | 2 | 6 | 500 × 2 × 6 = 6000 |
| 7 | Water pump | 100 | 1 | 2 | 1000 × 1 × 2 = 2000 |
| | | | | Daily total consumption Watt Hrs. | =14460 |

∴ Total energy consumption per day = 14460 Wh

= **14.46 kWh**

∴ Monthly energy consumption in kWh = 14.46 × 30

= 433.8

≅ **434 kWh or units.**

Cost of energy is ₹ 5/unit

∴ Monthly electricity bill or charges = 434 × 5

= **₹ 2170**

**Example-5.2 :**

**A residential building has following load connected in it.**

**Incandescent lamps 100 W each, 02 Nos. 6 hrs/day**

**Fluorescent lamps 40 W each, 04 Nos. 6 hrs/day**

**Fans 60 W each, 06 Nos. 5hrs/day**

**Electric cooker 1.5 KW each, 01 Nos. 4 hrs/day**

**Electric geyser 1 KW each, 01 Nos. 3 hrs/day**

**Calculate the total cost of electrical energy for 30 days, at the rate of ₹ 3 per unit.**

Scanned with CamScanner

*Solution :*

| Sr. No. | Item | Wattage | Nos. | Working Hrs per day | Energy Consumption in watt.Hrs/day |
|---|---|---|---|---|---|
| 1. | Incandescent Lamp | 100 | 2 | 6 | 100 × 2 × 6 = 1200 |
| 2. | Fluorescent | 40 | 4 | 6 | 40 × 4 × 6 = 960 |
| 3. | Fan | 60 | 6 | 5 | 60 × 6 × 5 = 1800 |
| 4. | Electric cooker | 1500 | 1 | 4 | 1500 × 1 × 4 = 6000 |
| 5. | Electric geysar | 1000 | 1 | 3 | 1000 × 1 × 3 = 3000 |
| | | | | Total energy consumption/day | = 12960 Wh |

∴ Total energy consumption per day = 12960 Wh
= 12.960 kWh

∴ Monthly energy consumption = 12.960 × 30
= 388.8
≅ 389 kWh or unit

Cost of energy is ₹ 3/unit

∴ Total cost of electrical energy = 389 × 3
= ₹ 1167

**Example-5.3 :**

**Calculate the electricity bill amount for a month of April, if 4 bulbs of 40 W for 5 h, 4 tube lights of 60 W for 5 h, a TV of 100 W for 6 h, a washing machine of 400 W for 3 h, a water pump of 0.5 HP for 15 minutes are used per day. The cost per unit is ₹ 3.50. Consider 1 HP = 746 watts.**

**GTU, May-2019**

*Solution :*

| Sr. No. | Item | Wattage | Nos. | Working Hrs per day | Energy Consumption in watt.Hrs/day |
|---|---|---|---|---|---|
| 1. | Bulb | 40 | 4 | 5 | 800 |
| 2. | Tube Light | 60 | 4 | 5 | 1200 |
| 3. | T.V. | 100 | 1 | 6 | 600 |
| 4. | Washing Machine | 400 | 1 | 3 | 1200 |
| 5. | Water Pump | 0.5 × 746 | 1 | 15/60 | 93.25 |
| | | | | Total energy consumption/day | 3893.25 Wh |

∴ Total energy consumption per day = 3893.25 Wh
= 3.89325 kWh

∴ Monthly energy consumption = 3.9 kWh or unit

∴ Total Electric energy consumed in the month of April (30 days)
= 3.9 × 30
= 117 kWh or units

Cost per unit = ₹ 3.50

Electricity bill amount = 117 × 3.50
= ₹ 409.50

Scanned with CamScanner

**Example-5.4 :**

**The domestic load in residential building is used in the following manner :**

**Fluorescent lamps 55 watt each, 4 Nos. 6 Hrs/day**

**Fans 70 watt each, 4 Nos. 8 Hrs/day**

**Refrigerator of 300 watt, 12 Hrs/day**

**Heater of 1000 watt, 2 Hrs/day**

**Television of 150 watt, 8 Hrs/day**

**Calculate : (i) connected load and (ii) Total cost of electrical energy for 30 days, at the rate of ₹ 3/unit.**

***Solution :***

**(i) Connected Load :**

| Sr. No. | Item | Watt | Nos. | Total Wattage |
|---|---|---|---|---|
| 1. | Fluorecent Lamp | 55 | 4 | 220 |
| 2. | Fan | 70 | 4 | 280 |
| 3. | Refrigerator | 300 | 1 | 300 |
| 4. | Heater | 1000 | 1 | 1000 |
| 5. | T.V. | 150 | 1 | 150 |
| | | **Total connected Load = 1950 Watt** | | |

**(ii) Daily Load :**

| Sr. No. | Items | Energy Consumption/day (Wh/day) |
|---|---|---|
| 1. | Fluorecent Lamp | 55 × 4 × 6 = 1320 |
| 2. | Fans | 70 × 4 × 8 = 2240 |
| 3. | Refrigerator | 300 × 1 × 12 = 3600 |
| 4. | Heater | 100 × 1 × 2 = 2000 |
| 5. | T.V. | 150 × 1 × 8 = 1200 |
| | ∴ Total energy consumption/day | = 10360 Wh<br>= 10.360 kWh |

∴ Maximum energy in a day = 1950 × 24

= 46800 Wh

= 46.8 kWh

**(iii) Total cost of electrical energy for 30 days :**

Total energy consumption for 30 days = 10.360 × 30

= 310.8 kWh

≅ 311 kWh or unit

Cost of energy is ₹ 3/unit

∴ Total cost of electrical energy = 3 × 311

= ₹ 933



Scanned with CamScanner

**Example-5.5 :**

**The domestic load in residential building comprises of the following : 6 lamps of 55 watt each, 4 fans of 80 watt each, 1 refrigerator of 300 watt, 1 heater of 1000 watt, Television of 120 watt. Calculate (1) The total current taken from the supply at a voltage of 230 volts (2) The energy consumed in a day, if on average only a quarter of the above load persists all the time.**

***Solution :***

| Sr. No. | Item | Watts | Nos. | Total Wattage |
|---|---|---|---|---|
| 1. | Lamps | 55 | 6 | 330 |
| 2. | Fans | 80 | 4 | 320 |
| 3. | Refrigerator | 300 | 1 | 300 |
| 4. | Heater | 1000 | 1 | 1000 |
| 5. | T.V. | 120 | 1 | 120 |
| | | | Total Wattage | 2070 Watts |

(1) Total current taken from the supply at 230V

$$I = \frac{W}{V}$$

$$= \frac{2070}{230}$$

$$= \boxed{9A}$$

(2) Total energy consumed in a day

$$= 2070 \times \frac{1}{4} \times 24 \text{ Wh}$$

$$= 12420 \text{ Wh}$$

$$= \boxed{12.42 \text{ kWh}}$$

**Example-5.6 :**

**Compute the monthly energy charges for an air conditioner having consumption of 2 kW. Daily usage of the air conditioner is 10 hours. Energy charges are ₹ 8 per unit.** **GTU, January-2019, 4-Marks**

| Sr. No. | Item | Wattage | Working Hrs per day | Energy Consumption in watt. Hrs/day |
|---|---|---|---|---|
| 1. | Air conditioner | 2000 | 10 | 2000 × 10 = 20,000 Wh |

∴ Total energy consumption per day = 20,000 Wh

= 20 kWh

∴ Monthly energy consumption = 20 × 30

= 600 kWh or Unit

Cost energy is ₹ 8 / Unit.

∴ Total cost of electricl energy per month = 600 × 8

= ₹ 4800

Scanned with CamScanner

**Syllabus Topic : Basics of Power Factor Improvement**

## 5.18 POWER FACTOR :

**GTU, Jan. 2019, May-2019, Jan. 2020**

**GTU Questions**

1. Why the consumers should improve their power factor ? **[January-2019, 4-Marks]**
2. What is power factor and why improvement is required in that ? **[May-2019, 6-Marks]**

- The power factor is denoted by $\cos\phi$. The various definitions of the power factor are given below :

**1. 1st Definition :**

- The cosine of the phase angle between the supply voltage applied to the circuit and the current flowing through the circuit is know as the power factor.

**2. 2nd Definition :**

- It is also defined as the ratio of resistance to the impedance.

$$\boxed{\cos\phi = \frac{R}{Z}}$$

**3. 3rd Definition :**

- It is also defined as the ratio of active power to the apparent power.

$$\text{Power Factor} = \frac{\text{Active Power}}{\text{Apparent Power}} = \frac{VI\cos\phi}{VI} = \cos\phi$$

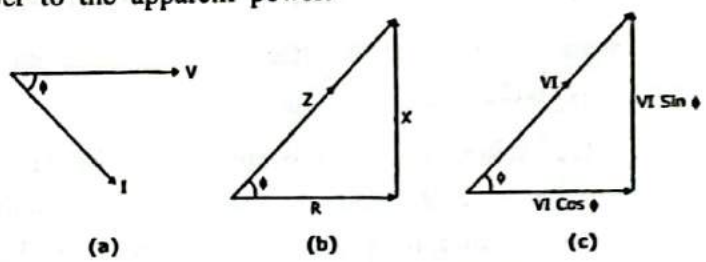


**FIG. 5.25 : POWER FACTOR**

- The various points to be remembered regarding the power factor are listed below :
  1. Its value cannot be greater than 1.
  2. If the current is in phase with the supply voltage then the power factor is said to be unity.
  3. If the current lags the supply voltage then the power factor is said to be lagging.
  4. While if the current leads the supply voltage then the power factor is said to be leading.

## 5.19 WHAT IS THE MEANING OF POOR POWER FACTOR ?

- The power factor is the measurement of efficient use of the electrical energy. The high power factor means the electrical energy is being utilized effectively while the low power factor indicates the poor utilization of electrical energy.
- The poor power factor of the system means the system draws the large amount of current which results into higher $I^2R$ loses. Hence the power factor close to unity is proffered for the economical and efficient distribution of electrical energy.

Scanned with CamScanner

## 5.20 METHODS OF IMPROVING POWER FACTOR :

GTU, January-2020

**GTU Questions**

1. Explain different methods of power factor improvement. [January-2020, 7-Marks]

- The various methods for improving the power factor are listed below :

1. Using high power factor motors
2. Using phase advancer
3. Using capacitor booster
4. Using static capacitor
5. Using synchronous condenser
6. Using synchronous motor

### 1. Power Factor Improvement Using High Power Factor Motors :

- The some motors operate at high power factor like compensated induction motors, Scharge motors etc.
- These motors can be used to improve the power factor. But, due to their high capital cost and high maintenance cost, these motors are generally not used in practice.

### 2. Power Factor Improvement Using Phase Advancer :

- As we know that the induction motor works at lagging power factor.
- The main reason is that the stator winding of the induction motor draws the exciting current which lags the supply voltage by 90°.
- But, if the exciting ampere turns are provided by other AC source then we can made the stator winding free from exciting current. The phase advancer is used for this purpose. It is also known as an AC exciter.
- In this method of power factor improvement, the rotor and phase advancer are mounted on the same shaft. The phase advancer is electrically connected in the rotor circuit of the motor.

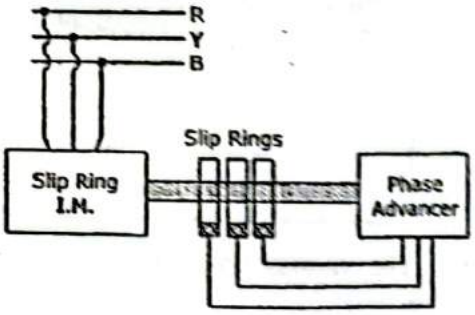


FIG. 5.26 : PHASE ADVANCER

- The function of the phase advancer is to supply the exciting ampere turns to the rotor circuit at slip frequency.
- Hence, the induction motor can be operated at leading power factor by supplying the excess ampere turns as the stator required.
- There are two types of phase advancers according to their connection with rotor winding :
  1. **Shunt Type Phase Advancer :** In this type of phase advancer, the exciting winding is connected in parallel with the rotor winding.
  2. **Series Type Phase Advancer :** In this type of phase advancer, the exciting winding is connected in series with the rotor winding.

**Advantages :**

1. The phase advancer are conveniently used where the synchronous motors are not used.
2. The lagging KVAR are significantly lowered as the exciting ampere turns are provided at slip frequency.

Scanned with CamScanner

**Limitations :**

- The various limitations of the phase advancer method for power factor improvement are given below :
  1. The phase advancers are not economical for motor rated below 250 HP.

## 3. Power Factor Improvement Using Capacitor Booster or Series Capacitor :

- In this method, the capacitors are connected in series with the line. The main function of these series capacitors is to compensate the inductive reactance effect.
- Hence, the power factor is improved. Such type of series capacitors are also known as capacitor booster.
- The capacitance of the series capacitor can be found as below :

$$X_C = X_L$$

$$\frac{1}{2\pi f C} = 2\pi f L$$

$$\boxed{C = \frac{1}{(2\pi f)^2 L}}$$

where, C = Series Inductance

$f$ = Supply frequency

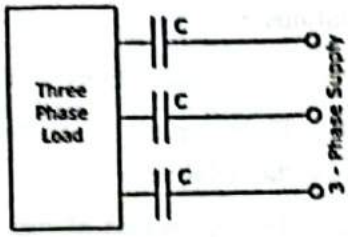


FIG. 5.27 : CAPACITOR BOOSTER OR SERIES CAPACITOR

## 4. Power Factor Improvement Using Static Capacitor :

- The power factor of various equipments can be improved by suing bank of static capacitors.
- Generally, the capacitors are connected in parallel with the equipments.
- The power factor improvement using static capacitor is shown in Fig. 5.28.

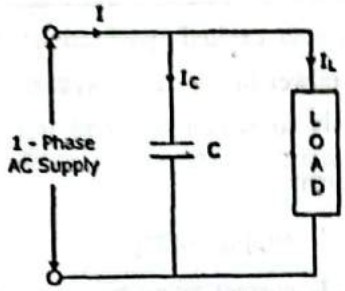


FIG. 5.28 : CONNECTION OF CAPACITOR BANK IN THREE PHASE CIRCUITS

- The capacitors draw the leading current which leads the supply voltage by an angle of 90°.
- Hence, they compensate the lagging KVAR and thus, the overall power factor of the system will be improved.
- To improve the power factor of the three phase circuits, the capacitor bank connected either in star or in delta is used. It is shown in Fig. 5.29.

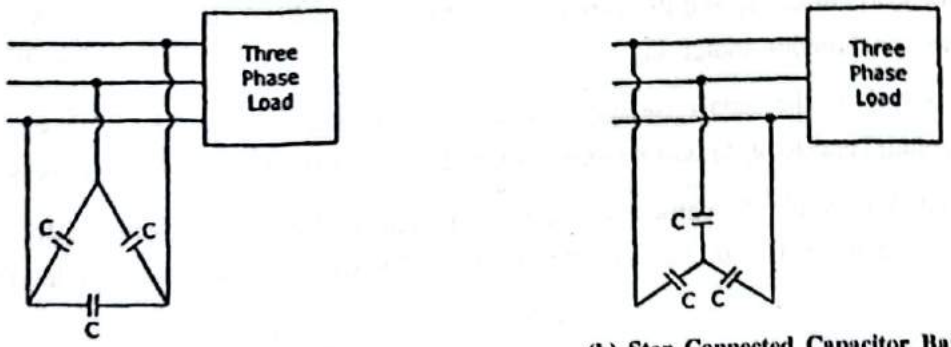


(a) Delta Connected Capacitor Bank (b) Star Connected Capacitor Bank

FIG. 5.29 : CONNECTION OF CAPACITOR BANK IN THREE PHASE CIRCUITS

Scanned with CamScanner

**Advantages :**

- The various advantages of the static capacitor method for power factor improvement are given below :
  1. This method of power factor improvement is maintenance free as the capacitors are static and they do not contain any rotating parts.
  2. The installation of the capacitors is very easy as they are very light in weight and also, they do not require any foundation.
  3. In this method, the losses are very small.
  4. The performance of the capacitors is not affected by the surrounding atmospheric conditions.

**Limitations :**

- The various limitations of the static capacitor method for power factor improvement are given below :
  1. If the capacitors are damaged, the maintenance is very uneconomical and the replacement is one of the solution.
  2. The life period of the capacitors is very short about 8 to 10 years.
  3. The capacitors are easily damaged if the voltage exceeds its rated value.

## 5. Power Factor Improvement using Synchronous Motor :

- The over excited synchronous draws the current of leading power factor. Hence, it is possible to improve the power factor of the system using synchronous motor. The synchronous motor is connected across same supply to which the load is connected.
- Assume;
  1. V supply voltage,
  2. $I_1$ current taken by load which lags the supply voltage V by an angle $\phi_1$.
  3. $I_2$ current taken by the synchronous motor which lead the supply voltage V by an angle $\phi_2$.
- As shown in vector diagram 5.30(a), the total current I taken from the supply is the vector summation of load current $I_1$ and the current taken by the synchronous motor $I_2$.

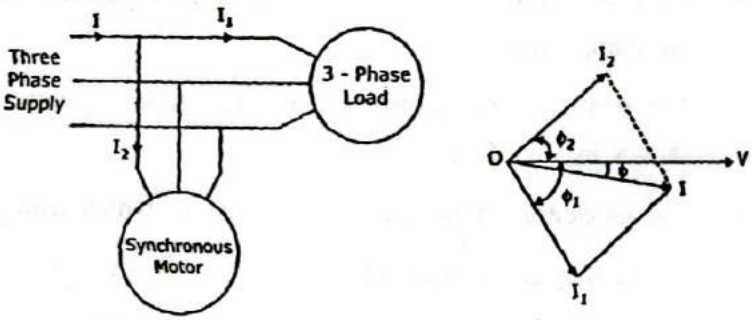


(a) Connection of Synchronous Motor (b) Vector Diagram

**FIG. 5.30 : POWER FACTOR IMPROVEMENT USING SYNCHRONOUS MOTOR**

- The total current I lag the supply voltage by an angle $\phi$ which is less than the angle $\phi_1$. The angle between the supply voltage and total current reduces which shows that the power factor of the system is improved.
- The main function of the synchronous motor is to improve the power factor of the system and it can also drive the mechanical load. The calculation of the KVAR capacity of the synchronous motor is given below :

Power Factor of Load = $\cos\phi_1$

Power Factor of Synchronous Motor = $\cos\phi_2$

Combined Power Factor = $\cos\phi$

Scanned with CamScanner

KVAR Supplied by Load;

$$AC = P_1 \times \tan\phi_1$$

KVAR Supplied by Synchornous motor;

$$EF = BC = P_2 \times \tan\phi_2$$

Combined KVAR;

$$AB = AC - BC = AC - EF$$

$$P \times \tan\phi = (P_1 \times \tan\phi_1 - P_2 \times \tan\phi_2)$$

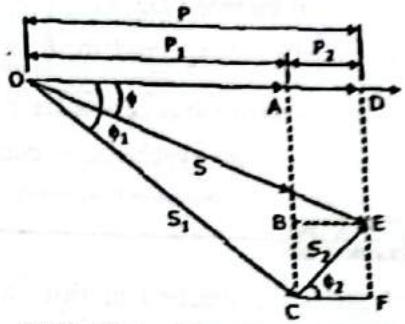


**FIG. 5.31 : POWER FACTOR IMPROVEMENT USING S.M.**

**Advantages :**

- The various advantages of the synchronous motor method for power factor improvement are given below :
  1. The fault can easily be removed which is not possible in the case of static capacitors.
  2. The smooth control of power factor can be achieved by varying the field excitation of the synchornous motor.
  3. The thermal stability of the winding against the short circuit is very high.

**Limitations :**

- The various limitations of the synchronous motor method for power factor improvement are given below :
  1. The maintenance is higher to the presence of the rotating parts.
  2. The synchronous motors are costly as compared to the static capacitors for the ratings upto 500 kVA.
  3. The significant losses occur in the motor.
  4. The synchronous motors are not self starting. Hence, the auxiliary equipments are required to start them. It increases the overall cost of the system.
  5. The operation of the motor is noisy.

## 6. Power Factor Improvement Using Synchronous Condenser :

- When the over excited synchronous motor works on the no load then it is known as synchornous condenser. The over excited synchornous motor draws the current of leading power factor.
- Hence, it is possible to improve the power factor of the system using synchronous condenser. The synchronous condenser is connected across same supply to which the load is connected.

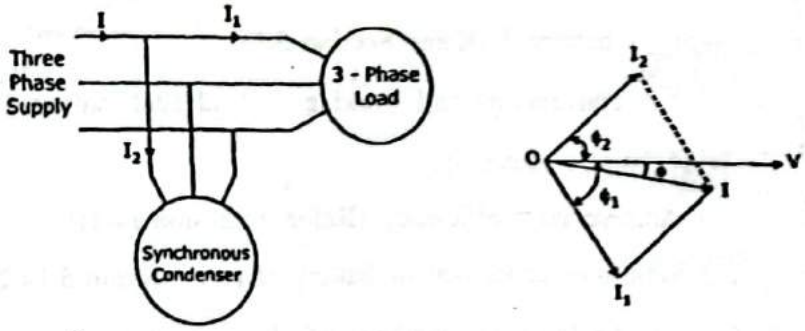


**(a) Connection of Synchronous Condenser** **(b) Vector Diagram**

**FIG. 5.32 : POWER FACTOR IMPROVEMENT USING SYNCHORNOUS CONDENSER**

- Assume;
  1. V supply voltage.
  2. $I_1$ current taken by load which lags the supply voltage V by an angle $\phi_1$.
  3. $I_2$ current taken by the synchronous condenser which leads the supply voltage V by an angle $\phi_2$.
- As shown in vector diagram 5.32(b), the total current I taken from the supply is the vector summation of load current $I_1$ and the current taken by the synchronous condenser $I_2$.

Scanned with CamScanner

- The total current I lag the supply voltage by an angle $\phi$ which is less than the angle $\phi_2$. The angle between the supply voltage and total current reduce, the power factor of the system improves.
- As the synchronous condenser operates at no load, it cannot drive the mechanical load. Hence, the main function of the synchronous condenser is only to improve the power factor of the system.

**Exercise**

1. What is the function of fuse in electric circuit ? **(Refer Section-5.1)**
2. What are the types of fuse ? Explain any one in detail. **(Refer Section-5.2)**
3. Write short notes on :
   (1) MCB **(Refer Section-5.3)**
   (2) ELCB **(Refer Section-5.5)**
   (3) MCCB **(Refer Section-5.6)**
4. Give the circuit diagram of MCB. Explain its working in brief. **(Refer Section-5.3)**
5. Give the comparison between Fuse and MCB. **(Refer Section-5.4)**
6. Explain the working of Earth Leakage Circuit Breaker (ELCB) with diagram. **(Refer Section-5.5)**
7. Explain the working of Moulded case circuit breaker (MCCB) with diagram. **(Refer Section-5.6)**
8. Explain types of Electrical Wires. **(Refer Section-5.7)**
9. Explain construction of cable. **(Refer Section-5.8)**
10. What is earthing ? And explain purpose of earthing. **(Refer Section-5.9)**
11. State the different methods of earthing and explain any one of them. **(Refer Section-5.9.1)**
12. Explain the safety precaution for electrical appliances. **(Refer Section-5.10)**
13. What is battery ? **(Refer Section-5.11)**
14. Explain construction and working of lead acid battery. **(Refer Section-5.12)**
15. What do you mean by,
    (1) Ampere hour efficiency **(Refer Section-5.14(1))**
    (2) Watt-hour efficiency of battery **(Refer Section-5.14(2))**
16. Explain the following methods of charging of battery,
    (1) Constant Current Method **(Refer Section-5.15(1))**
    (2) Constant Voltage Method **(Refer Section-5.15(2))**
17. What are the important characteristics of batteries ? **(Refer Section-5.16)**
18. Define : Power factor **(Refer Section-5.18)**
19. What are the methods to improve the power factor ? Explain any one of them in detail. **(Refer Section-5.20)**

Scanned with CamScanner

## GTU QUESTIONS AND ANSWERS

**Note to the Students :**

- **Below Questions are from previous GTU Examination Papers**

### January-2019

1. Briefly describe pipe earthing. **3-Marks**

**Ans. : Refer Section-5.9.1**

2. Give a list of safety devices used for home appliances. **3-Marks**

**Ans. : Refer Section-5.1**

3. Discuss the difference between MCB and Fuse. **3-Marks**

**Ans. : Refer Section-5.4**

4. Why the consumers should improve their power factor ? **4-Marks**

**Ans. : Refer Section-5.18**

5. What is MCCB ? Where is it used ? **3-Marks**

**Ans. : Refer Section-5.6**

6. Compute the monthly energy charges for an air conditioner having consumption of 2 kW. Daily usage of the air conditioner is 10 hours. Energy charges are Rs 8 per unit. **4-Marks**

**Ans. : Refer Example-5.6**

7. Write a short note on Miniature Circuit Breaker (MCB). **4-Marks**

**Ans. : Refer Section-5.3**

8. Write a short note on Earth Leakage Circuit Breaker (ELCB). **4-Marks**

**Ans. : Refer Section-5.5**

### May-2019

9. State function of various parts of HT cable. **3-Marks**

**Ans. : Refer Section-5.8**

10. Give the comparison of fuse and MCB. **4-Marks**

**Ans. : Refer Section-5.4**

11. Explain plate earthing with diagram. **7-Marks**

**Ans. : Refer Section-5.9.1(2)**

12. What is power factor and why improvement is required in that ? **3-Marks**

**Ans. : Refer Section-5.18**

13. State and explain in brief important electrical characteristics of battery. **4-Marks**

**Ans. : Refer Section-5.16**

14. Calculate the electricity bill amount for a month of April, if 4 bulbs of 40 W for 5 h, 4 tube lights of 60 W for 5 h, a TV of 100 W for 6 h, a washing machine of 400 W for 3 h, a water pump of 0.5 HP for 15 minutes are used per day. The cost per unit is ₹ 3.50. Consider 1 HP = 746 watts. **7-Marks**

**Ans. : Refer Example-5.3**



Scanned with CamScanner

**January-2020**

**15.** Classify different types of cables with reference to voltage and insulation materials. **3-Marks**

**Ans. : Refer Section-5.8**

**16.** Explain the terms : (1) Residual magnetism (2) Coercive Force. **4-Marks**

**17.** Explain the process of charging and discharging of Lead acid cell. **7-Marks**

**Ans. : Refer Section-5.15**

**18.** Compare MCB and ELCB. **3-Marks**

**Ans. : Refer Section-5.3 & 5.5**

**19.** Write safety precautions for electrical Applications. **4-Marks**

**Ans. : Refer Section-5.10**

**20.** Explain different methods of power factor improvement. **7-Marks**

**Ans. : Refer Section-5.20**

**December-2020**

**21.** Discuss types of cables used for residential and commercial wiring. **4-Marks**

**Ans. : Refer Section-5.8**

**22.** Explain the following protective devices in detail :

(i) SFU (ii) MCB (iii) ELCB **7-Marks**

**Ans. : Refer Section-5.1, 5.3 & 5.5**

**OR**

**23.** Explain the construction of the lead-acid battery with neat diagram. **4-Marks**

**Ans. : Refer Section-5.11**

**24.** Explain different types earthing and its importance in electrical utility system in detail. **7-Marks**

**Ans. : Refer Section-5.9.1**

■ ✻ ■

**Note : Also Refer GTU Paper Solutions at the End of the Book**

Scanned with CamScanner

# WINTER EXAMINATION – 2018

## JANUARY-2019

**BE – SEMESTER-I & II**

# BASIC ELECTRICAL ENGINEERING

## STATISTICAL ANALYSIS

| Chapter Number | Marks |
|---|---|
| Chapter-1 | 21 M |
| Chapter-2 | 31 M |
| Chapter-3 | 8 M |
| Chapter-4 | 31 M |
| Chapter-5 | 28 M |
| Questions Covered in the Text Book | 119 M (100%) |

Scanned with CamScanner

# QUESTION PAPER

## January-2019

1. (a) Define Amplitude, Frequency and Time period for alternating quantities. **3-Marks**

   (b) Briefly describe the operating principle of a transformer. **4-Marks**

   (c) Obtain the value of Norton's equivalent current and Norton's equivalent resistance for the network shown in the following figure. **7-Marks**

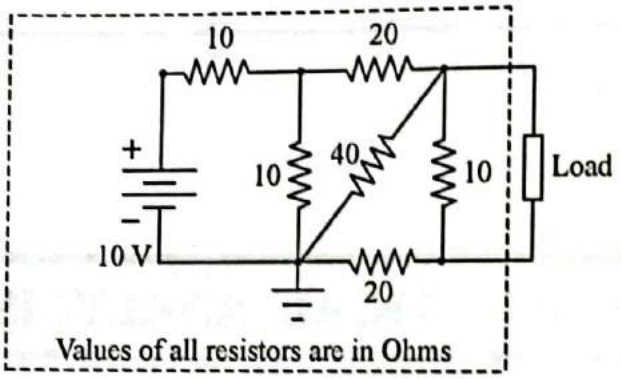


2. (a) Prepare a list of parts of a DC machine. Explain any one part in detail. **3-Marks**

   (b) Briefly describe the auto transformer and its applications. **4-Marks**

   (c) The maximum values of voltage and current in a circuit are 400 V and 20 A respectively. Both the quantities are sinusoidal with 50 Hz frequency. The instantaneous values of voltage and current at time t = 0 second are 283 V and 10 A respectively (both increasing and positive). Obtain the equations of voltage and current in this circuit at time 't' second. Also find out the active power consumption in the circuit. **7-Marks**

**OR**

   (c) In a series R-L circuit, a voltage of 10 V at 50 Hz frequency produces a current of 700 mA. In the same circuit with same magnitude of applied voltage with a frequency of 75 Hz produces a current of 500 mA. Find out the values of R and L in the circuit. **7-Marks**

3. (a) Briefly describe pipe earthing. **3-Marks**

   (b) Mention the types of single phase induction motor. Explain any one of them. **4-Marks**

   (c) Derive the equations of active, reactive and apparent powers in a series R-L circuit with sinusoidal AC supply. **7-Marks**

**OR**

3. (a) Give a list of safety devices used for home appliances. **3-Marks**

   (b) Give a comparison between squirrel cage induction motor and wound rotor induction motor. **4-Marks**

   (c) Derive the equations of capacitor voltage and circuit current in a series R-C circuit connected to a DC supply through a switch. Assume that switch is initially open and it is closed at time t = 0 second. **7-Marks**

Scanned with CamScanner

4. (a) Discuss the difference between MCB and Fuse. **3-Marks**

(b) Why the consumers should improve their power factor ? **4-Marks**

(c) Explain Thevenin's theorem. Take suitable example and explain the steps to apply Thevenin's theorem for a resistive circuit with a constant DC voltage source. **7-Marks**

**OR**

4. (a) What is MCCB ? Where is it used ? **3-Marks**

(b) Compute the monthly energy charges for an air conditioner having consumption of 2 kW. Daily usage of the air conditioner is 10 hours. Energy charges are Rs 8 per unit. **4-Marks**

(c) Explain the term power factor. Explain the steps to obtain power factor of an AC circuit with parallel connection of R, L and C elements. **7-Marks**

5. (a) Describe the stator construction of a single phase induction motor. **3-Marks**

(b) Write a short note on Miniature Circuit Breaker (MCB). **4-Marks**

(c) Explain the term rotating magnetic field with proper diagrams in case of a three phase induction motor. **7-Marks**

**OR**

5. (a) Describe the construction of rotor for a slip ring type three phase induction motor. **3-Marks**

(b) Write a short note on Earth Leakage Circuit Breaker (ELCB). **4-Marks**

(c) Explain the working principles of a synchronous generator and a synchronous motor. **7-Marks**

■ ✻ ■

Scanned with CamScanner

# CHAPTER WISE SOLUTION

## January-2019

**CHAPTER-1** **Total Marks : 21**

**1. (c)** Obtain the value of Norton's equivalent current and Norton's equivalent resistance for the network shown in the following figure. **7-Marks**

**Ans. : Refer Section-1.40**

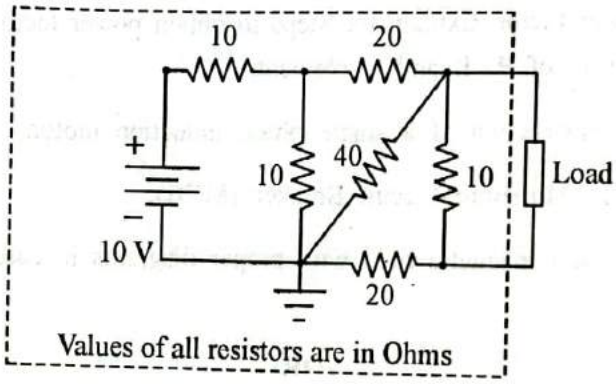


**OR 3. (c)** Derive the equations of capacitor voltage and circuit current in a series R-C circuit connected to a DC supply through a switch. Assume that switch is initially open and it is closed at time t = 0 second. **7-Marks**

**Ans. : Refer Section-1.28**

**4. (c)** Explain Thevenin's theorem. Take suitable example and explain the steps to apply Thevenin's theorem for a resistive circuit with a constant DC voltage source. **7-Marks**

**Ans. : Refer Section-1.24**

**CHAPTER-2** **Total Marks : 31**

**1. (a)** Define Amplitude, Frequency and Time period for alternating quantities. **3-Marks**

**Ans. : Refer Section-2.4**

**2. (c)** The maximum values of voltage and current in a circuit are 400 V and 20 A respectively. Both the quantities are sinusoidal with 50 Hz frequency. The instantaneous values of voltage and current at time t = 0 second are 283 V and 10 A respectively (both increasing and positive). Obtain the equations of voltage and current in this circuit at time 't' second. Also find out the active power consumption in the circuit. **7-Marks**

**Ans. : Refer Example-2.8.1**

**OR 2. (c)** In a series R-L circuit, a voltage of 10 V at 50 Hz frequency produces a current of 700 mA. In the same circuit with same magnitude of applied voltage with a frequency of 75 Hz produces a current of 500 mA. Find out the values of R and L in the circuit. **7-Marks**

**Ans. : Refer Example-2.21.1**

Scanned with CamScanner

3. (c) Derive the equations of active, reactive and apparent powers in a series R-L circuit with sinusoidal AC supply. **7-Marks**

**Ans. : Refer Section-2.19**

OR 4. (c) Explain the term power factor. Explain the steps to obtain power factor of an AC circuit with parallel connection of R, L and C elements. **7-Marks**

**Ans. : Refer Section-2.20**

## CHAPTER-3 — Total Marks : 8

1. (b) Briefly describe the operating principle of a transformer. **4-Marks**

**Ans. : Refer Section-3.18**

2. (b) Briefly describe the auto transformer and its applications. **4-Marks**

**Ans. : Refer Section-3.33**

## CHAPTER-4 — Total Marks : 31

2. (a) Prepare a list of parts of a DC machine. Explain any one part in detail. **3-Marks**

**Ans. : Refer Section-4.24**

3. (b) Mention the types of single phase induction motor. Explain any one of them. **4-Marks**

**Ans. : Refer Section-4.20**

OR 3. (b) Give a comparison between squirrel cage induction motor and wound rotor induction motor. **4-Marks**

**Ans. : Refer Section-4.4.1**

5. (a) Describe the stator construction of a single phase induction motor. **3-Marks**

**Ans. : Refer Section-4.20.1**

5. (c) Explain the term rotating magnetic field with proper diagrams in case of a three phase induction motor. **7-Marks**

**Ans. : Refer Section-4.2**

OR 5. (a) Describe the construction of rotor for a slip ring type three phase induction motor. **3-Marks**

**Ans. : Refer Section-4.2.1(2)**

OR 5. (c) Explain the working principles of a synchronous generator and a synchronous motor. **7-Marks**

**Ans. : Refer Section-4.36 & 4.38**

## CHAPTER-5 — Total Marks : 28

3. (a) Briefly describe pipe earthing. **3-Marks**

**Ans. : Refer Section-5.9.1**

OR 3. (a) Give a list of safety devices used for home appliances. **3-Marks**

**Ans. : Refer Section-5.1**

4. (a) Discuss the difference between MCB and Fuse. **3-Marks**

**Ans. : Refer Section-5.4**

Scanned with CamScanner

4. (b) Why the consumers should improve their power factor ? **4-Marks**

**Ans. : Refer Section-5.18**

OR 4. (a) What is MCCB ? Where is it used ? **3-Marks**

**Ans. : Refer Section-5.6**

OR 4. (b) Compute the monthly energy charges for an air conditioner having consumption of 2 kW. Daily usage of the air conditioner is 10 hours. Energy charges are Rs 8 per unit. **4-Marks**

**Ans. : Refer Example-5.6**

5. (b) Write a short note on Miniature Circuit Breaker (MCB). **4-Marks**

**Ans. : Refer Section-5.3**

OR 5. (b) Write a short note on Earth Leakage Circuit Breaker (ELCB). **4-Marks**

**Ans. : Refer Section-5.5**

■ ✻ ■

Scanned with CamScanner

# SUMMER EXAMINATION – 2019

**MAY-2019**

**BE – SEMESTER-I & II**

# BASIC ELECTRICAL ENGINEERING

## STATISTICAL ANALYSIS

| Chapter Number | Marks |
|---|---|
| Chapter-1 | 14 M |
| Chapter-2 | 27 M |
| Chapter-3 | 22 M |
| Chapter-4 | 28 M |
| Chapter-5 | 28 M |
| Questions Covered in the Text Book | 119 M (100%) |



Scanned with CamScanner

# QUESTION PAPER

## May-2019

1. (a) State and explain Kirchoff's voltage and current laws. **3-Marks**

   (b) Compare the resistive series and parallel circuit. **4-Marks**

   (c) Consider the circuit shown in Figure. Reduce the portion of the circuit to the left of terminals $a-b$ to (a) a Thevenin equivalent and (b) a Norton equivalent. Find the current through R = 16 Ω. **7-Marks**

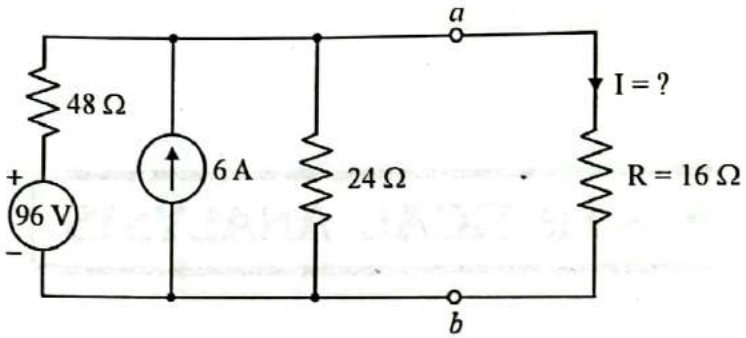


2. (a) For series resonant circuit with brief description draw the phasor diagrams for following conditions (i) At resonant (ii) Below resonant (iii) Above resonant. **3-Marks**

   (b) Prove that the sum of readings of two watt meters connected to measure power in three phase circuit gives total power consumed by the circuit. **4-Marks**

   (c) A series RLC circuit with L = 160 mH, C = 100 μF and R = 40 Ω is connected to a sinusoidal voltage $V_{(t)} = 40 \sin\omega t$, with ω = 200 rad/sec. Find (i) What is the Impedance of the circuit. (ii) Let the current at any instant in the circuit be $I_{(t)} = I_0 \sin(\phi t - F)$. Find $I_0$ (iii) What is the Phase $\phi$ ? **7-Marks**

**OR**

   (c) A balanced star connected load of (4 + j3) Ω per phase is connected to a balance 3 phase 400 V supply. Find the line current, power factor, active power and reactive power. **7-Marks**

3. (a) For A.C. sinusoidal current prove that $I_{rms} = 0.707\ I_m$. **3-Marks**

   (b) Explain voltage step-up and step-down operation in autotransformer with diagram. **4-Marks**

   (c) Explain various connections of three phase transformer with diagram. **7-Marks**

**OR**

3. (a) Explain in brief single phase RC parallel circuit with phasor diagram **3-Marks**

   (b) Derive the E.M.F. equation of a single phase transformer. **4-Marks**

   (c) Explain with diagram construction of core type and shell type transformer. **7-Marks**

Scanned with CamScanner

4. (a) State significance of the back emf in DC motor. **3-Marks**

(b) Classify and compare various DC motor. **4-Marks**

(c) Explain construction of synchronous generator with diagram. **7-Marks**

**OR**

4. (a) Give the classification of Induction motor. **3-Marks**

(b) Discuss how the rotating magnetic field is produced in three phase induction motor. **4-Marks**

(c) Explain the working of single phase induction motor with diagram. **7-Marks**

5. (a) State function of various parts of HT cable. **3-Marks**

(b) Give the comparison of fuse and MCB. **4-Marks**

(c) Explain plate earthing with diagram. **7-Marks**

**OR**

5. (a) What is power factor and why improvement is required in that ? **3-Marks**

(b) State and explain in brief important electrical characteristics of battery. **4-Marks**

(c) Calculate the electricity bill amount for a month of April, if 4 bulbs of 40 W for 5 h, 4 tube lights of 60 W for 5 h, a TV of 100 W for 6 h, a washing machine of 400 W for 3 h, a water pump of 0.5 HP for 15 minutes are used per day. The cost per unit is Rs 3.50. Consider 1 HP = 746 watts **7-Marks**

■ ✻ ■

Scanned with CamScanner

# CHAPTER WISE SOLUTION

## May-2019

**CHAPTER-1** **Total Marks : 14**

**1. (a)** State and explain Kirchoff's voltage and current laws. **3-Marks**

**Ans. : Refer Section-1.19**

**1. (b)** Compare the resistive series and parallel circuit. **4-Marks**

**Ans. : Refer Section-1.15**

**1. (c)** Consider the circuit shown in Figure. Reduce the portion of the circuit to the left of terminals $a-b$ to (a) a Thevenin equivalent and (b) a Norton equivalent. Find the current through R = 16 Ω. **7-Marks**

**Ans. : Refer Section-137 & 1.43**

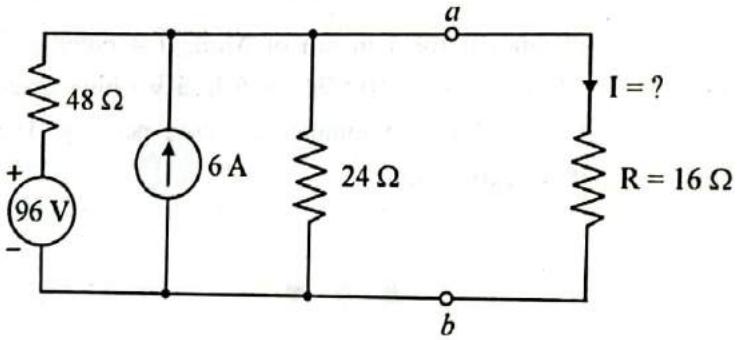


**CHAPTER-2** **Total Marks : 27**

**2. (a)** For series resonant circuit with brief description draw the phasor diagrams for following conditions (i) At resonant (ii) Below resonant (iii) Above resonant. **3-Marks**

**Ans. : Refer Section-2.23**

**2. (b)** Prove that the sum of readings of two watt meters connected to measure power in three phase circuit gives total power consumed by the circuit. **4-Marks**

**Ans. : Refer Section-2.38**

**2. (c)** A series RLC circuit with L = 160 mH, C = 100 μF and R = 40 Ω is connected to a sinusoidal voltage $V_{(t)} = 40 \sin\omega t$, with ω = 200 rad/sec. Find (i) What is the Impedance of the circuit. (ii) Let the current at any instant in the circuit be $I_{(t)} = I_0 \sin(\phi t - F)$. Find $I_0$ (iii) What is the Phase $\phi$ ? **7-Marks**

**Ans. : Refer Example-2.29.1**

**OR 2. (c)** A balanced star connected load of (4 + j3) Ω per phase is connected to a balance 3 phase 400 V supply. Find the line current, power factor, active power and reactive power. **7-Marks**

**Ans. : Refer Example-2.38**

Scanned with CamScanner

3. (a) For A.C. sinusoidal current prove that $I_{rms} = 0.707\ I_m$. **3-Marks**

**Ans. : Refer Section-2.8.1**

OR 3. (a) Explain in brief single phase RC parallel circuit with phasor diagram **3-Marks**

**Ans. : Refer Section-2.25.1**

## CHAPTER-3 Total Marks : 22

3. (b) Explain voltage step-up and step-down operation in autotransformer with diagram. **4-Marks**

**Ans. : Refer Section-3.33**

3. (c) Explain various connections of three phase transformer with diagram. **7-Marks**

**Ans. : Refer Section-3.39**

OR 3. (b) Derive the E.M.F. equation of a single phase transformer. **4-Marks**

**Ans. : Refer Section-3.21**

OR 3. (c) Explain with diagram construction of core type and shell type transformer. **7-Marks**

**Ans. : Refer Section-3.19**

## CHAPTER-4 Total Marks : 28

4. (a) State significance of the back emf in DC motor. **3-Marks**

**Ans. : Refer Section-4.27**

4. (b) Classify and compare various DC motor. **4-Marks**

**Ans. : Refer Section-4.29**

4. (c) Explain construction of synchronous generator with diagram. **7-Marks**

**Ans. : Refer Section-4.37**

OR 4. (a) Give the classification of Induction motor. **3-Marks**

**Ans. : Refer Section-4.3**

OR 4. (b) Discuss how the rotating magnetic field is produced in three phase induction motor. **4-Marks**

**Ans. : Refer Section-4.2**

OR 4. (c) Explain the working of single phase induction motor with diagram. **7-Marks**

**Ans. : Refer Section-4.18 & 4.19**

## CHAPTER-5 Total Marks : 28

5. (a) State function of various parts of HT cable. **3-Marks**

**Ans. : Refer Section-5.8**

5. (b) Give the comparison of fuse and MCB. **4-Marks**

**Ans. : Refer Section-5.4**

5. (c) Explain plate earthing with diagram. **7-Marks**

**Ans. : Refer Section-5.9.1(2)**

Scanned with CamScanner

**OR 5. (a)** What is power factor and why improvement is required in that ? **3-Marks**

**Ans. : Refer Section-5.18**

**OR 5. (b)** State and explain in brief important electrical characteristics of battery. **4-Marks**

**Ans. : Refer Section-5.16**

**OR 5. (c)** Calculate the electricity bill amount for a month of April, if 4 bulbs of 40 W for 5 h, 4 tube lights of 60 W for 5 h, a TV of 100 W for 6 h, a washing machine of 400 W for 3 h, a water pump of 0.5 HP for 15 minutes are used per day. The cost per unit is Rs 3.50. Consider 1 HP = 746 watts. **7-Marks**

**Ans. : Refer Example-5.3**

■ ✻ ■

Scanned with CamScanner

# WINTER EXAMINATION – 2019-2020

**JANUARY-2020**

**BE – SEMESTER-I & II**

# BASIC ELECTRICAL ENGINEERING

## STATISTICAL ANALYSIS

| Chapter Number | Marks |
|---|---|
| Chapter-1 | 24 M |
| Chapter-2 | 35 M |
| Chapter-3 | 07 M |
| Chapter-4 | 25 M |
| Chapter-5 | 28 M |
| Questions Covered in the Text Book | 119 M (100%) |

Scanned with CamScanner

# QUESTION PAPER

## January-2020

1. (a) State Ohm's law and Kirchhoff's Laws in context with DC circuits. **3-Marks**

   (b) A 100 V, 60 Watt bulb is to be operated from a 220 V supply. What is the resistance to be connected in series with the bulb to glow normally ? **4-Marks**

   (c) Derive an expression for equivalent resistances of a star connected network to transform into a Delta connected network. **7-Marks**

2. (a) State Thevenin's and Norton's Theorems. **3-Marks**

   (b) Compare series and parallel resonance in ac circuit. **4-Marks**

   (c) A single phase R-L-C circuit having resistance of 8 Ω, inductance of 80 mH and capacitance of 100 μF is connected across single phase ac 50 V, 50Hz supply. Calculate the current, power factor and voltage drop across inductance and capacitance. **7-Marks**

**OR**

   (c) Derive an expression for the voltage across the capacitor during charging through the resistor at any instant $V_C = V(1 - e^{-t/RC})$. Assume that RC series circuit is connected across a DC supply of voltage V. **7-Marks**

3. (a) Define the following terms in connection with AC waveforms : **3-Marks**

   (1) Q-Factor (2) Power Factor (3) Form factor.

   (b) Draw impedance triangle, Voltage triangle, Power triangle for single phase R-L series circuit. **4-Marks**

   (c) Derive the relationship between Phase and Line values of voltages and currents in case of 3-phase Star-connection. **7-Marks**

**OR**

3. (a) Define the terms : (1) Real power (2) Reactive power (3) Apparent power. **3-Marks**

   (b) Derive the EMF equation of single phase transformer. **4-Marks**

   (c) With neat circuit diagram and a phasor diagram prove that two watt meters are sufficient to measure total power in 3-phase system. **7-Marks**

4. (a) Explain working principle of single phase Transformer. **3-Marks**

   (b) Give Merits, Demerits and Applications of Induction Motor. **4-Marks**

   (c) Explain in detail the construction of an Alternator. **7-Marks**

**OR**

Scanned with CamScanner

4. (a) Explain working principle of D.C. Motor. **3-Marks**

(b) Compare poly phase Induction Motor and single phase Induction Motor. **4-Marks**

(c) Explain Generation of Rotating Magnetic Field in 3-phase Induction Motor with diagrams and equations. **7-Marks**

5. (a) Classify different types of cables with reference to voltage and insulation materials. **3-Marks**

(b) Explain the terms : (1) Residual magnetism (2) Coercive Force. **4-Marks**

(c) Explain the process of charging and discharging of Lead acid cell. **7-Marks**

**OR**

5. (a) Compare MCB and ELCB. **3-Marks**

(b) Write safety precautions for electrical Applications. **4-Marks**

(c) Explain different methods of power factor improvement. **7-Marks**

■ ❋ ■



Scanned with CamScanner

# CHAPTER WISE SOLUTION

## January-2020

**CHAPTER-1** **Total Marks : 24**

**1. (a)** State Ohm's law and Kirchhoff's Laws in context with DC circuits. **3-Marks**

**Ans. : Refer Section-1.11 & 1.19**

**1. (b)** A 100 V, 60 Watt bulb is to be operated from a 220 V supply. What is the resistance to be connected in series with the bulb to glow normally ? **4-Marks**

***Solution :***

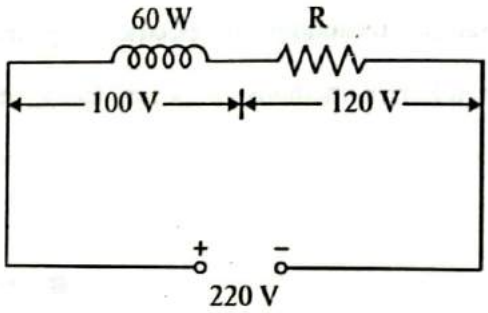


P = 60 W

V = 100 V

Current drawn by camp

Rated current $I = \frac{P}{V} = \frac{60}{100} = 0.6$ A

Lamp will operate on 220 V if the current flowing through it remaing 0.6 A.

Voltage drop cross R is

$$V_R = 220 - 100 = 120 \text{ V} = IR \quad \text{where, } I = 0.6 \text{ A}$$

$$\therefore \quad R = \frac{V_R}{I} = \frac{120}{0.6} = 200\ \Omega$$

**Ans. :** $\boxed{R = 200\ \Omega}$

**1. (c)** Derive an expression for equivalent resistances of a star connected network to transform into a Delta connected network. **7-Marks**

**Ans. : Refer Section-1.17.2**

**2. (a)** State Thevenin's and Norton's Theorems. **3-Marks**

**Ans. : Refer Section-1.24 & 1.25**

**OR 2. (c)** Derive an expression for the voltage across the capacitor during charging through the resistor at any instant $V_C = V(1 - e^{-t/RC})$. Assume that RC series circuit is connected across a DC supply of voltage V. **7-Marks**

**Ans. : Refer Section-1.28**

**CHAPTER-2** **Total Marks : 35**

**2. (b)** Compare series and parallel resonance in ac circuit. **4-Marks**

**Ans. : Refer Section-2.27**

Scanned with CamScanner

2. (c) A single phase R-L-C circuit having resistance of 8 Ω, inductance of 80 mH and capacitance of 100 μF is connected across single phase ac 50 V, 50Hz supply. Calculate the current, power factor and voltage drop across inductance and capacitance. **7-Marks**

*Solution :*

$R = 8\ \Omega,\ L = 80\ mH, = 80 \times 10^{-3}\ H,\ C = 100\ \mu f,\ 100 \times 10^{-6}\ F,\ V = 150,\ f = 50\ Hz$

**Impedance Z :**

1. Reactance $X_L = 2\pi f L = 2\pi \times 50 \times 80 \times 10^{-3}$

2. Reactance $X_C = \dfrac{1}{2\pi fc}$

$$= \frac{1}{2\pi \times 50 \times 100 \times 10^{-6}}$$

$$= \boxed{31.83\ \Omega}$$

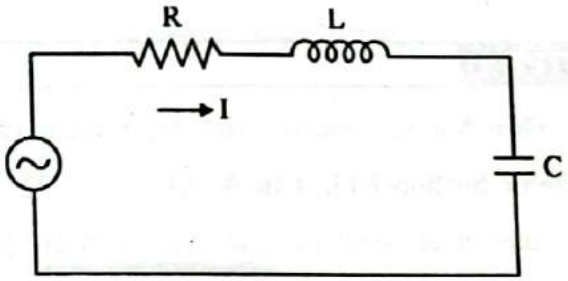


3. Impedance $Z = R + j\,(X_L - X_C)$

$$= 8 + j\,(25.13 - 31.83)$$

$$= 8 - j\,6.7 = \sqrt{8^2 + (6.7)^2}$$

$$Z = 10.44\ \Omega$$

Current $I = \dfrac{V}{Z} = \dfrac{150}{10.44} = \boxed{14.37\ \text{Amp.}}$ ... **Ans.**

Power factor $\cos\phi = \cos\left(\tan^{-1}\dfrac{X}{R}\right) = \cos\left(\tan^{-1}\dfrac{-6.7}{R}\right) = \boxed{0.766\ \text{leading}}$ ... **Ans.**

Volt across coil $V_L = I X_L = 14.37 \times 25.13 = \boxed{V_L = 361.12\ V}$ ... **Ans.**

Volt across capacitor $V_C = I X_C = 14.37 \times 31.83 = \boxed{V_C = 475.4\ V}$ ... **Ans.**

3. (a) Define the following terms in connection with AC waveforms : **3-Marks**

(1) Q-Factor (2) Power Factor (3) Form factor.

**Ans. : Refer Section-2.24 & 2.9**

3. (b) Draw impedance triangle, Voltage triangle, Power triangle for single phase R-L series circuit. **4-Marks**

**Ans. : Refer Section-2.17**

3. (c) Derive the relationship between Phase and Line values of voltages and currents in case of 3-phase Star-connection. **7-Marks**

**Ans. : Refer Section-2.34**

**OR** 3. (a) Define the terms : (1) Real power (2) Reactive power (3) Apparent power. **3-Marks**

**Ans. : Refer Section-2.19**

Scanned with CamScanner

OR 3. (c) With neat circuit diagram and a phasor diagram prove that two watt meters are sufficient to measure total power in 3-phase system. **7-Marks**

**Ans. : Refer Section-2.38**

## CHAPTER-3 — Total Marks : 07

OR 3. (b) Derive the EMF equation of single phase transformer. **4-Marks**

**Ans. : Refer Section-3.21**

4. (a) Explain working principle of single phase Transformer. **3-Marks**

**Ans. : Refer Section-3.18**

## CHAPTER-4 — Total Marks : 25

4. (b) Give Merits, Demerits and Applications of Induction Motor. **4-Marks**

**Ans. : Refer Section-4.15, 4.16 & 4.17**

4. (c) Explain in detail the construction of an Alternator. **7-Marks**

**Ans. : Refer Section-4.37**

OR 4. (a) Explain working principle of D.C. Motor. **3-Marks**

**Ans. : Refer Section-4.26**

OR 4. (b) Compare poly phase Induction Motor and single phase Induction Motor. **4-Marks**

OR 4. (c) Explain Generation of Rotating Magnetic Field in 3-phase Induction Motor with diagrams and equations. **7-Marks**

**Ans. : Refer Section-4.2**

## CHAPTER-5 — Total Marks : 28

5. (a) Classify different types of cables with reference to voltage and insulation materials. **3-Marks**

**Ans. : Refer Section-5.8**

5. (b) Explain the terms : (1) Residual magnetism (2) Coercive Force. **4-Marks**

5. (c) Explain the process of charging and discharging of Lead acid cell. **7-Marks**

**Ans. : Refer Section-5.15**

OR 5. (a) Compare MCB and ELCB. **3-Marks**

**Ans. : Refer Section-5.3 & 5.5**

OR 5. (b) Write safety precautions for electrical Applications. **4-Marks**

**Ans. : Refer Section-5.10**

OR 5. (c) Explain different methods of power factor improvement. **7-Marks**

**Ans. : Refer Section-5.20**

■ ✻ ■

Scanned with CamScanner

# WINTER EXAMINATION – 2020

## DECEMBER-2020

**BE – SEMESTER-I & II**

# BASIC ELECTRICAL ENGINEERING

## STATISTICAL ANALYSIS

| Chapter Number | Marks |
|---|---|
| Chapter-1 | 17 M |
| Chapter-2 | 25 M |
| Chapter-3 | 21 M |
| Chapter-4 | 31 M |
| Chapter-5 | 22 M |
| Questions Covered in the Text Book | 116 M (100%) |

Scanned with CamScanner

# QUESTION PAPER

## December-2020

1. (a) A resistance of 10 Ω is connected in series with two resistances each of the 15 Ω arranged in parallel. What resistance must be shunted across this parallel combination so that total current taken shall be 1.5 A with 20 V applied ? **3-Marks**

   (b) State the superposition theorem with suitable example. **4-Marks**

   (c) For the Wheatstone bridge diagram shown in **Fig. 1**, obtain the current flowing through the 20 Ω resistance using Thevenin's equivalent network. **7-Marks**

2. (a) Explain Kirchoff's law for DC series network in brief. **3-Marks**

   (b) Define the following terms for AC (alternating current) signal :
   (i) Crest Factor (ii) Form Factor (iii) Average Value (iv) RMS Value. **4-Marks**

   (c) A current of 5 A flows through a non-inductive resistance in series with a choking coil when supplied at 250 V, 50 Hz. If the voltage across the resistance is 125 V and across the coil 200 V, calculate (i) impedance, reactance and resistance of the coil (ii) the power absorbed by the coil (iii) and total power. **7-Marks**

**OR**

   (c) Prove that the current in purely inductive circuit lags its voltage by 90° and average power consumption in pure inductor is zero. **7-Marks**

3. (a) Write the comparison between series resonance and parallel resonance condition in AC circuit. **3-Marks**

   (b) Derive the relation between line-voltage and phase-voltage for three-phase four wire star connection network. Also, prove that the total three-phase power consumption in star connection is $P_T = \sqrt{3}\ V_L\ I_L \cos\phi$. **4-Marks**

   (c) Explain various connections of three phase transformer with diagram. **7-Marks**

**OR**

3. (a) Explain magnetic hysteresis. **3-Marks**

   (b) Derive the E.M.F. equation of a single phase transformer **4-Marks**

   (c) State the difference in core type and shell type transformer with neat and clean construction diagram. **7-Marks**

4. (a) How the rotating magnetic field is produce in three-phase induction motor ? Explain in brief. **3-Marks**

   (b) Why single-phase induction motor is not self starting while three-phase induction motor is self starting. Explain in brief. **4-Marks**

   (c) Explain construction of Alternator with neat diagram. **7-Marks**

**OR**

Scanned with CamScanner

4. (a) Justify that how back e.m.f. in DC motor acts like a governor. **3-Marks**

(b) State the comparison of generator and motor action with respect to design and working principle. Draw the necessary diagram. **4-Marks**

(c) Write working principle of DC motor with neat diagram. **7-Marks**

5. (a) Calculate the resistance of a 100 m length of wire having a uniform cross sectional area of 0.02 $mm^2$ and having resistivity of 40 $\mu\Omega$-cm. **3-Marks**

(b) Discuss types of cables used for residential and commercial wiring. **4-Marks**

(c) Explain the following protective devices in detail :
(i) SFU (ii) MCB (iii) ELCB **7-Marks**

**OR**

5. (a) A d-c generator has an e.m.f of 200 volts and provides a current of 10 amps. How much energy does it provide each minute ? **3-Marks**

(b) Explain the construction of the lead-acid battery with neat diagram. **4-Marks**

(c) Explain different types earthing and its importance in electrical utility system in detail. **7-Marks**

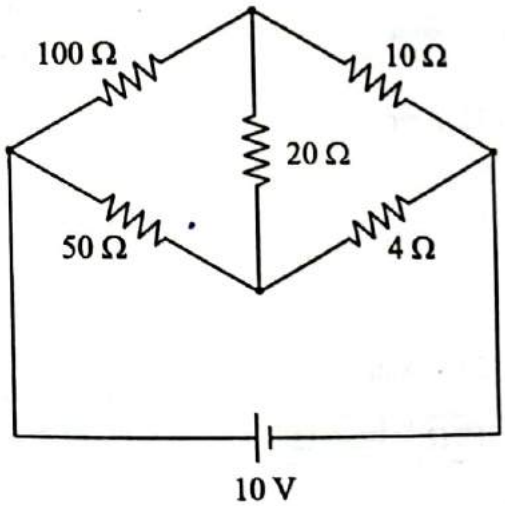


**Fig. 1**

■ ✻ ■

Scanned with CamScanner

# CHAPTER WISE SOLUTION

## December-2020

**CHAPTER-1** **Total Marks : 17**

**1. (a)** A resistance of 10 Ω is connected in series with two resistances each of the 15 Ω arranged in parallel. What resistance must be shunted across this parallel combination so that total current taken shall be 1.5 A with 20 V applied ? **3-Marks**

***Solution :***

The circuit connections are shown in figure.

Voltage drop across 10-Ω resistor = 1.5 × 10 = 15 V

Voltage drop across parallel combination, $V_{AB}$ = 20 – 15 = 5 V

Hence, voltage across each parallel resistance is 5 V.

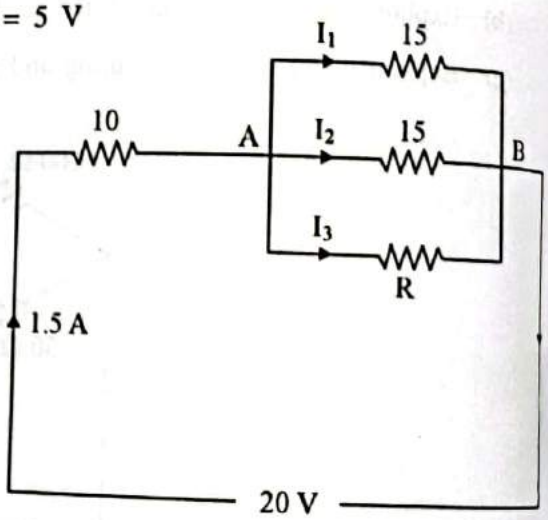


$$I_1 = \frac{5}{15} = \frac{1}{3} \text{ Amp.} = 0.33 \text{ Amp.}$$

$$I_2 = \frac{5}{15} = \frac{1}{3} \text{ Amp.} = 0.33 \text{ Amp.}$$

According to KCL

$$I = I_1 + I_2 + I_3$$

$$\therefore \quad 1.5 = 0.33 + 0.33 + I_3$$

$$\therefore \quad I_3 = 1.5 - 0.33 - 0.33 = 0.84 \text{ Amp.}$$

$$\therefore \quad R = \frac{V_{AB}}{I_3} = \frac{5}{0.84} = \boxed{5.952\ \Omega} \quad \boxed{\cong 6\ \Omega}$$

**1. (b)** State the superposition theorem with suitable example.

**Ans. : Refer Section-1.23**

**1. (c)** For the Wheatstone bridge diagram shown in figure, obtain the current flowing through the 20 Ω resistance using Thevenin's equivalent network. **7-Marks**

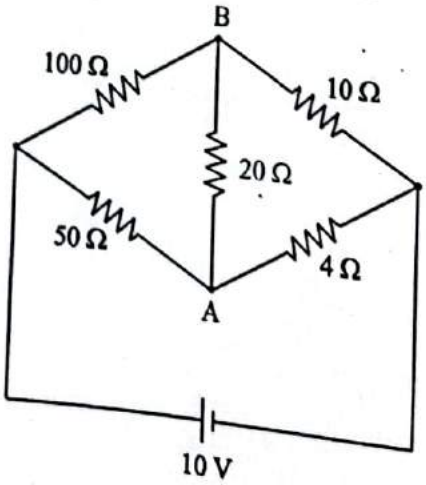


Scanned with CamScanner

**Solution :**

**Step-1 :** Disconnect the 20 Ω resistor and calculate the voltage across terminal A and B.

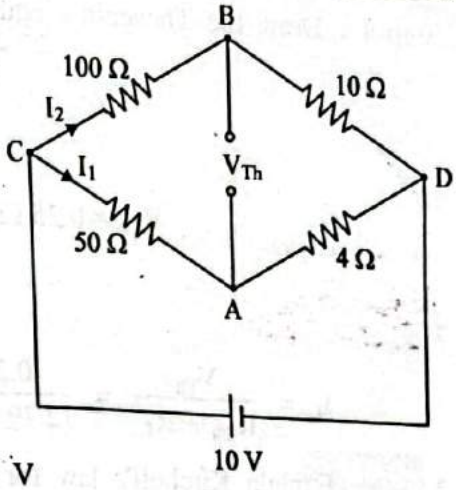


**Step-2 :** Determination of $V_{TH}$

Current in Branch CAD $= \frac{V}{R} = \frac{10}{54} = 1.185$ Amp.

$\therefore$ P.D. between A and C $= V_{AC} = I_1 \times R = 0.185 \times 50$

Current in Branch CBD $= \frac{V}{R} = \frac{10}{110} = 0.09$ Amp.

$\therefore$ P.D. between B and C $= V_{BC} = I_2 \times R = 0.09 \times 100 = 9$ V

P.D. between A and B $= V_{AC} - V_{BC} = 9.25 - 9 = \boxed{0.25}$ (with A +Ve)

$\therefore$ $\boxed{V_{Th} = V_{AB} = 0.25 \text{ V}}$

**Step-3 :** Determine of $R_{Th}$

Short the voltage source and calculate the equivalent resistance between A and B.

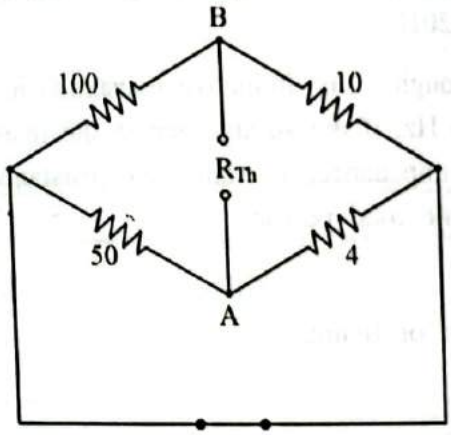


**Voltage source is replaced by short circuit**

The Rearrange the above circuit is

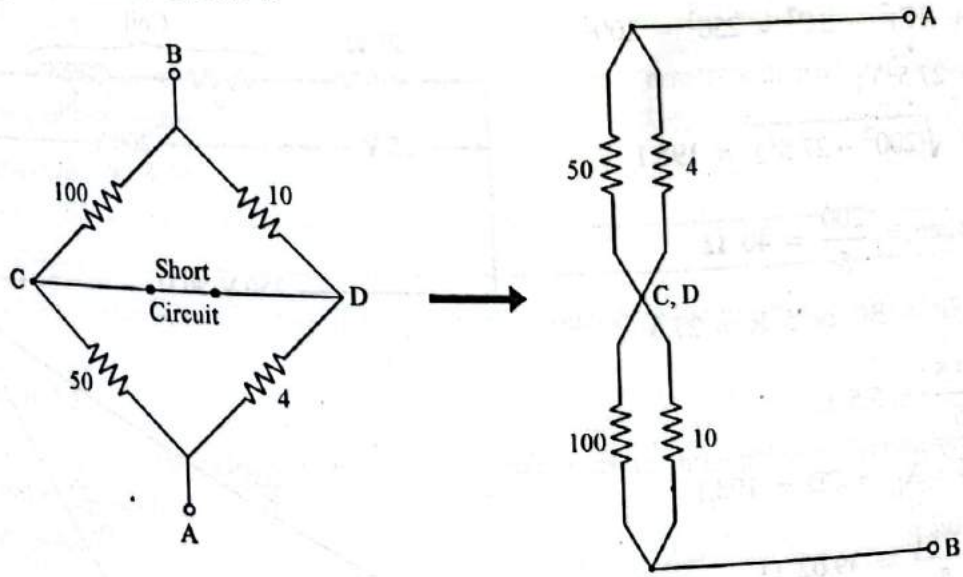


$R_{Th} = (100 \parallel 10) + (50 \parallel 4) = 9.09 + 3.70 = \boxed{12.79\ \Omega}$



Scanned with CamScanner

**Step-4 :** Draw the Thevenin's equivalent circuit

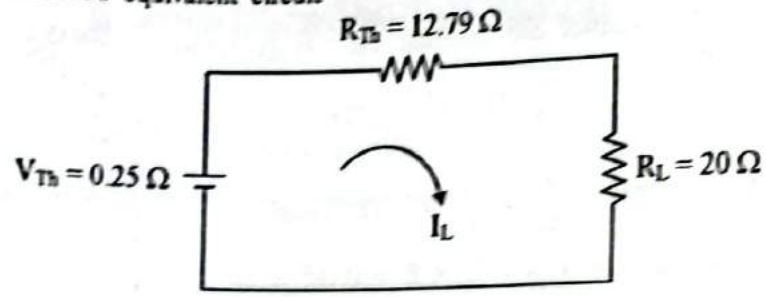


$$\therefore\ I_L = \frac{V_{Th}}{R_{Th} + R_L} = \frac{0.25}{12.79 + 20} = \boxed{0.0076 \text{ Amp.}}$$

**2. (a)** Explain Kirchoff's law for DC series network in brief. **3-Marks**

**Ans. : Refer Section-1.19**

## CHAPTER-2

**Total Marks : 25**

**2. (b)** Define the following terms for AC (alternating current) signal :
(i) Crest Factor (ii) Form Factor (iii) Average Value (iv) RMS Value. **4-Marks**

**Ans. : Refer Section-2.7, 2.8, 2.9, 2010**

**2. (c)** A current of 5 A flows through a non-inductive resistance in series with a choking coil when supplied at 250 V, 50 Hz. If the voltage across the resistance is 125 V and across the coil 200 V, calculate (i) impedance, reactance and resistance of the coil (ii) the power absorbed by the coil (iii) and total power. **7-Marks**

***Solution :***

As seen from the vector diagram of figure.

$$BC^2 + CD^2 = 200^2 \quad \text{... (1)}$$

$$(125 + BC)^2 + CD^2 = 250^2 \quad \text{... (2)}$$

Subtracting equation (1) from (2), we get

$$(125 + BC)^2 - BC^2 = 250^2 - 200^2$$

$$\therefore\ BC = 27.5 \text{ V};$$

$$CD = \sqrt{(200^2 - 27.5^2)} = 198.1 \text{ V}$$

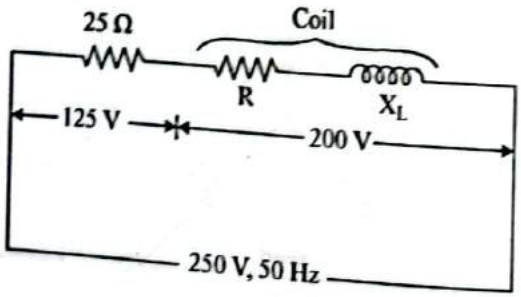


(1) Coil impedance $= \frac{200}{5} = 40\ \Omega$

$$V_R = IR = BC \text{ or } 5\ R = 27.5$$

$$\therefore\ P = \frac{27.5}{5} = 5.5\ \Omega$$

Also $V_L = I \cdot X_L = CD = 198.1$

$$\therefore\ X_L = \frac{198.1}{5} = 39.62\ \Omega$$

$$\text{or } X_L = (402 - 5.52) = 39.62\ \Omega$$

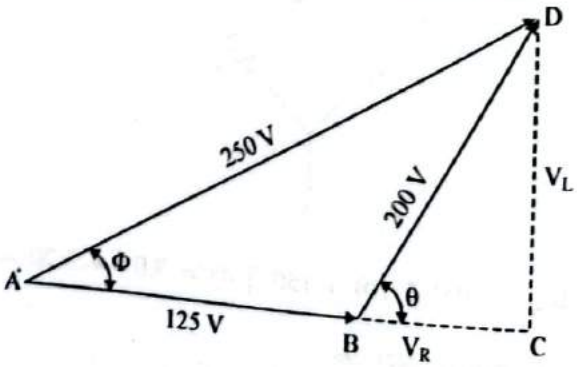


Scanned with CamScanner

(2) Power absorbed by the coil is = $I^2R = 5^2 \times 5.5 =$ **137.5 W**

(3) Total power = $VI\cos\phi = 250 \times 5 \times \frac{AC}{AD} = 250 \times 5 \times \frac{AC}{AD} =$ **762.5 W**

The power may also be calculated by using $I^2R$ formula.

Series resistance = $\frac{125}{5} = 25\ \Omega$

$\therefore$ Total power = $52 \times 30.5 =$ **762.5 W**

**OR 2. (c)** Prove that the current in purely inductive circuit lags its voltage by 90° and average power consumption in pure inductor is zero. **7-Marks**

**Ans. : Refer Section-2.15**

**3. (a)** Write the comparison between series resonance and parallel resonance condition in AC circuit. **3-Marks**

**Ans. : Refer Section-2.27**

**3. (b)** Derive the relation between line-voltage and phase-voltage for three-phase four wire star connection network. Also, prove that the total three-phase power consumption in star connection is $P_T = \sqrt{3}\ V_L\ I_L \cos\phi$. **4-Marks**

**Ans. : Refer Section-2.34**

## CHAPTER-3 — Total Marks : 21

**3. (c)** Explain various connections of three phase transformer with diagram. **7-Marks**

**Ans. : Refer Section-3.39**

**OR 3. (a)** Explain magnetic hysteresis. **3-Marks**

**Ans. : Refer Section-3.12**

**OR 3. (b)** Derive the E.M.F. equation of a single phase transformer **4-Marks**

**Ans. : Refer Section-3.21**

**OR 3. (c)** State the difference in core type and shell type transformer with neat and clean construction diagram. **7-Marks**

**Ans. : Refer Section-3.19 & 3.20**

## CHAPTER-4 — Total Marks : 31

**4. (a)** How the rotating magnetic field is produce in three-phase induction motor ? Explain in brief. **3-Marks**

**Ans. : Refer Section-4.2**

**4. (b)** Why single-phase induction motor is not self starting while three-phase induction motor is self starting. Explain in brief. **4-Marks**

**Ans. : Refer Section-4.18**

**4. (c)** Explain construction of Alternator with neat diagram. **7-Marks**

**Ans. : Refer Section-4.37**

Scanned with CamScanner

**OR 4. (a)** Justify that how back e.m.f. in DC motor acts like a governor. **3-Marks**

**Ans. : Refer Section-4.27**

**OR 4. (b)** State the comparison of generator and motor action with respect to design and working principle. Draw the necessary diagram. **4-Marks**

**Ans. : Refer Section-4.25**

**OR 4. (c)** Write working principle of DC motor with neat diagram. **7-Marks**

**Ans. : Refer Section-4.26**

**OR 5. (a)** A d-c generator has an e.m.f of 200 volts and provides a current of 10 amps. How much energy does it provide each minute ? **3-Marks**

***Solution :***

$$\text{Energy} = \text{Power} \times \text{Time} \quad \ldots (1)$$

$$\text{Power,} \quad P = V \times I$$

$$= 200 \times 10$$

$$= 200 \text{ Watt}$$

$$\therefore \quad \text{Energy} = 2000 \times 60 \quad \ldots (2)$$

$$= 1{,}20{,}000 \times \text{Joules}$$

$$= \boxed{120 \text{ KJoule}}$$

## CHAPTER-5

**Total Marks : 22**

**5. (b)** Discuss types of cables used for residential and commercial wiring. **4-Marks**

**Ans. : Refer Section-5.8**

**5. (c)** Explain the following protective devices in detail :

(i) SFU (ii) MCB (iii) ELCB **7-Marks**

**Ans. : Refer Section-5.1, 5.3 & 5.5**

**OR**

**OR 5. (b)** Explain the construction of the lead-acid battery with neat diagram. **4-Marks**

**Ans. : Refer Section-5.11**

**OR 5. (c)** Explain different types earthing and its importance in electrical utility system in detail. **7-Marks**

**Ans. : Refer Section-5.9.1**

■ ❋ ■

Scanned with CamScanner

# BASIC ELECTRICAL ENGINEERING

This book is written as per the new syllabus of the Gujarat Technological University for **Degree Engineering Students.**

## About The Author

**Dr. D. M. Pat**[illegible] M. E. [illegible]D (Electrical Power Systems) Working as Principal & Professor at **D. A. Degree Engin**[illegible]**y and Technology**, Mahemdabad, Kheda. He has published more than 150 research pape[illegible] and Conferences, He has received "Young Scientist Award", "Gu[illegible]om Gujarat Technology University. He also received "Engineering E[illegible]allence [illegible] from the Society of Power Engineers (India) and "IEI Young Engineers Awar[illegible] from the Institution of Engineers (India), "Shiksha Guarav Puraskar" from Center for Education Growth and Research - New Delhi, "Best Engineering College Teacher Award" From Indian Society for Technical Education (ISTE) - New Delhi. He received many best technical papers awards in National and International Conference. He has contributed articles to magazines and has authored several books. His areas of interest are in Power System, Distributed Generation, Electrical Machines, Smart Gird Technologies and Control System. He is life member of I.S.T.E. and S.P.E.


**THESE BOOKS ARE AVAILABLE AT ALL GOOD BOOK STORES AND ONLINE**

Available at: **ATUL BOOK STALL**
Under Fernandis Bridge, Gandhi Road, Ahmedabad-380 001.
Phone: (079) 26426677, 22160475, 22141244

SHOP VIA QR CODE

**ATUL'S BOOKS ARE AVAILABLE ONLINE AT**

Pooja PUBLICATION
www.poojaonlinebookstore.com

ATUL'S BOOKS are available online at....
Ajay ONLINE STALL
THE BOOK DESTINATION



ISBN 978-93-85173-43-1
9 789385 173431



Scanned with CamScanner