SECU-LZID5

5-channel peak & hold injector driver

Designed by Alexey A. Shabelnikov (aka STC) . UA Kiev, Copyright (c) 2019,

http://secu-3.org, e-mail: shabelnikov@secu-3.org.

Revision 4

10/02/2019

You can NOT use this work in commercial purposes without written approval of author

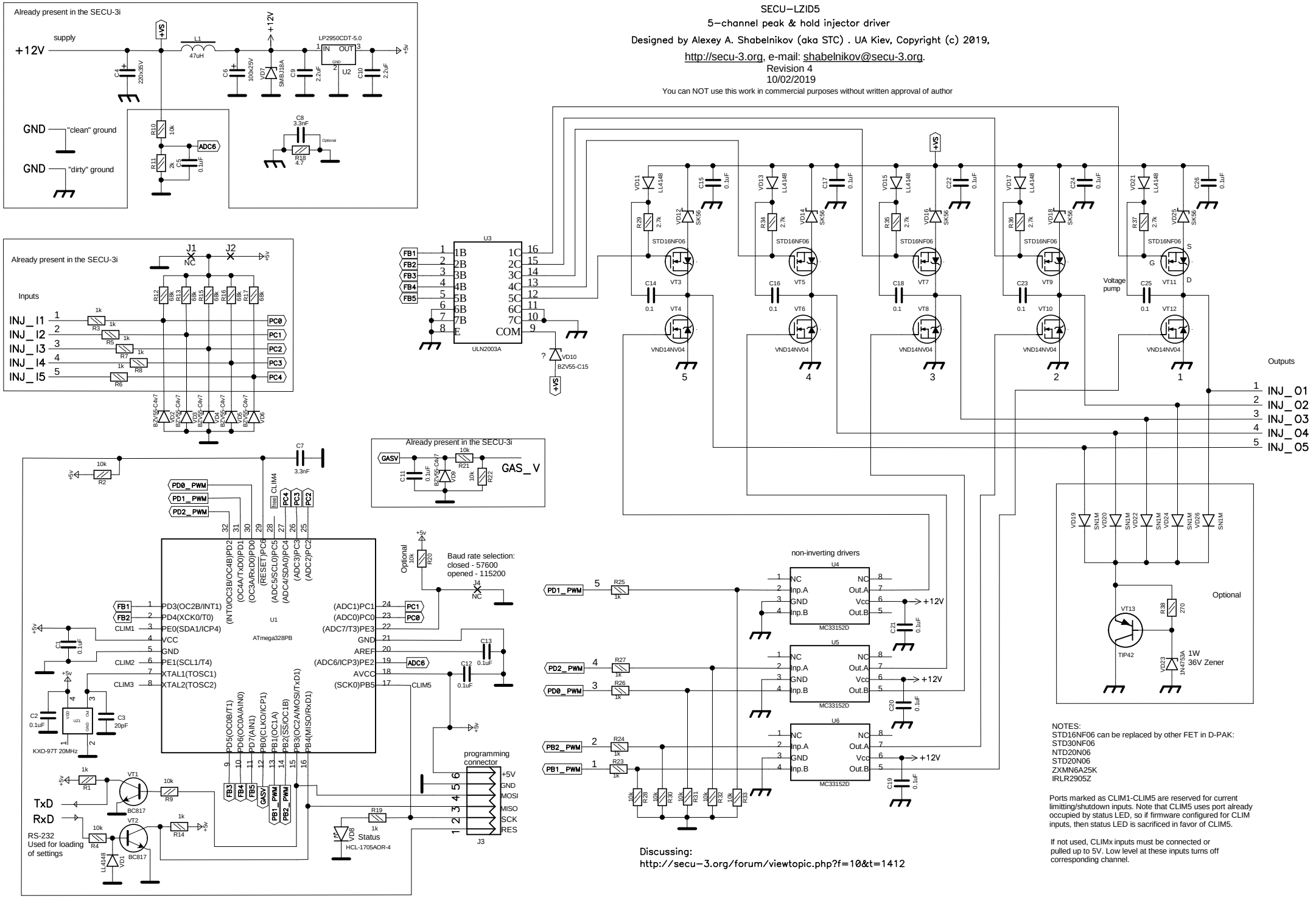

NOTES:
STD16NF06 can be replaced by other FET in D-PAK:
STD30NF06
NTD20N06
STD20N06
ZXMN6A25K
IRLR2905Z

Ports marked as CLIM1-CLIM5 are reserved for current limitting/shutdown inputs. Note that CLIM5 uses port already occupied by status LED, so if firmware configured for CLIM inputs, then status LED is sacrificed in favor of CLIM5.

If not used, CLIMx inputs must be connected or pulled up to 5V. Low level at these inputs turns off corresponding channel.

Discussing:
http://secu-3.org/forum/viewtopic.php?f=10&t=1412