SECU-LZID4

4-channel peak & hold injector driver

Designed by Alexey A. Shabelnikov (aka STC) . UA Kiev, Copyright (c) 2018,

http://secu-3.org, e-mail: shabelnikov@secu-3.org.

Revision 0

20/03/2018

You can NOT use this work in commercial purposes without written approval of author

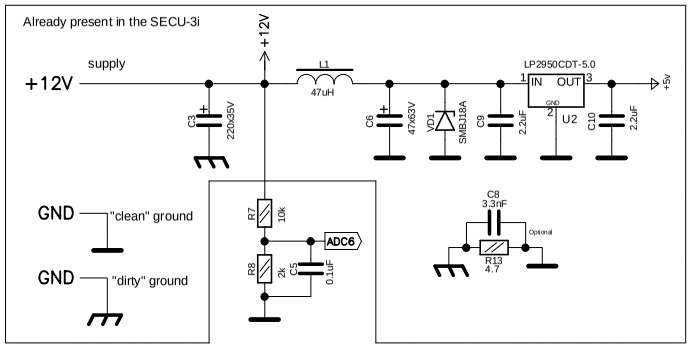

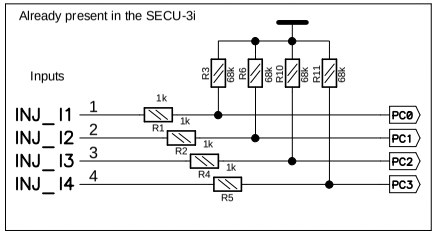

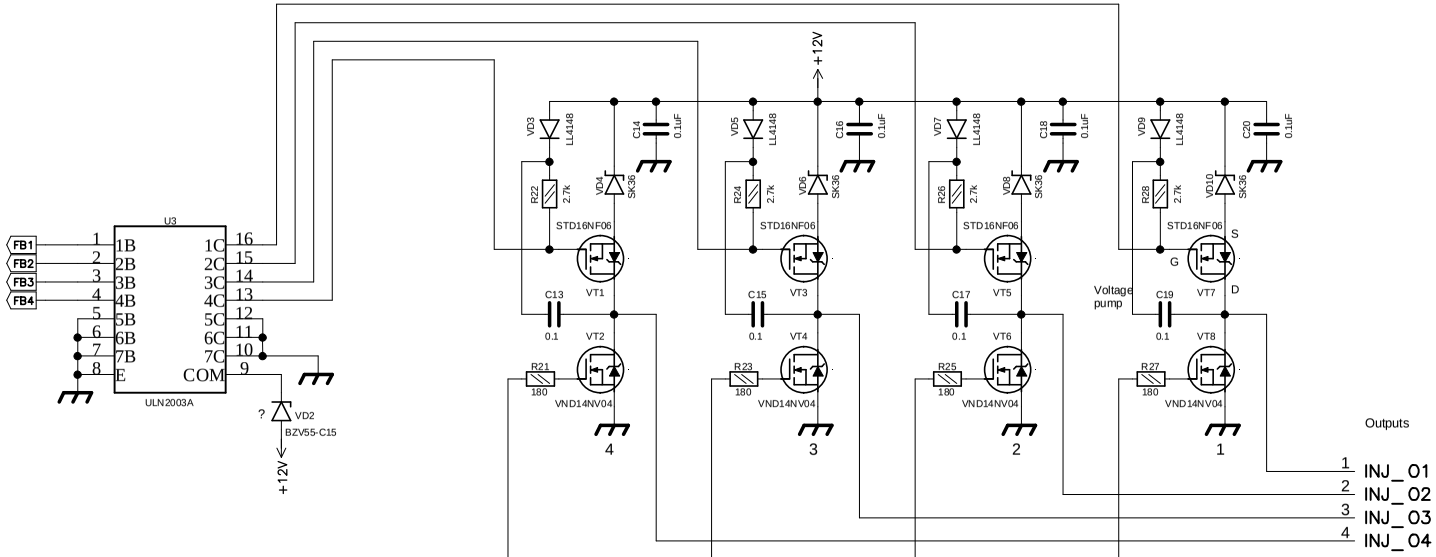

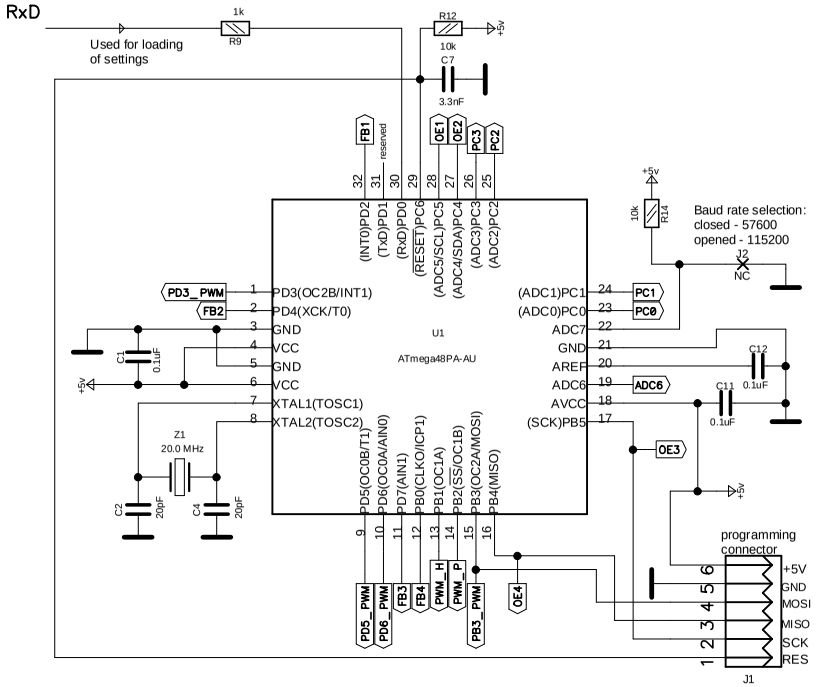

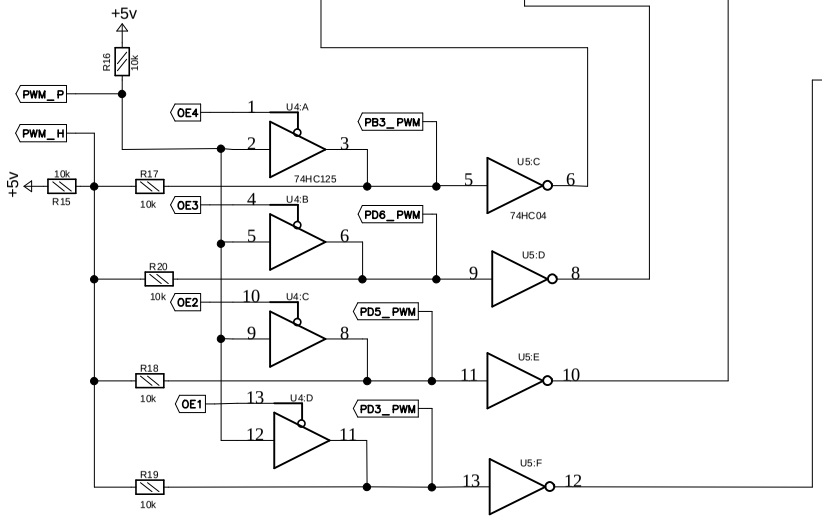

NOTES:
STD16NF06 can be replaced by other FET in D-PAK:
STD30NF06
NTD20N06
STD20N06
ZXMN6A25K
IRLR2905Z

Discussing:
http://secu-3.org/forum/viewtopic.php?f=10&t=1412