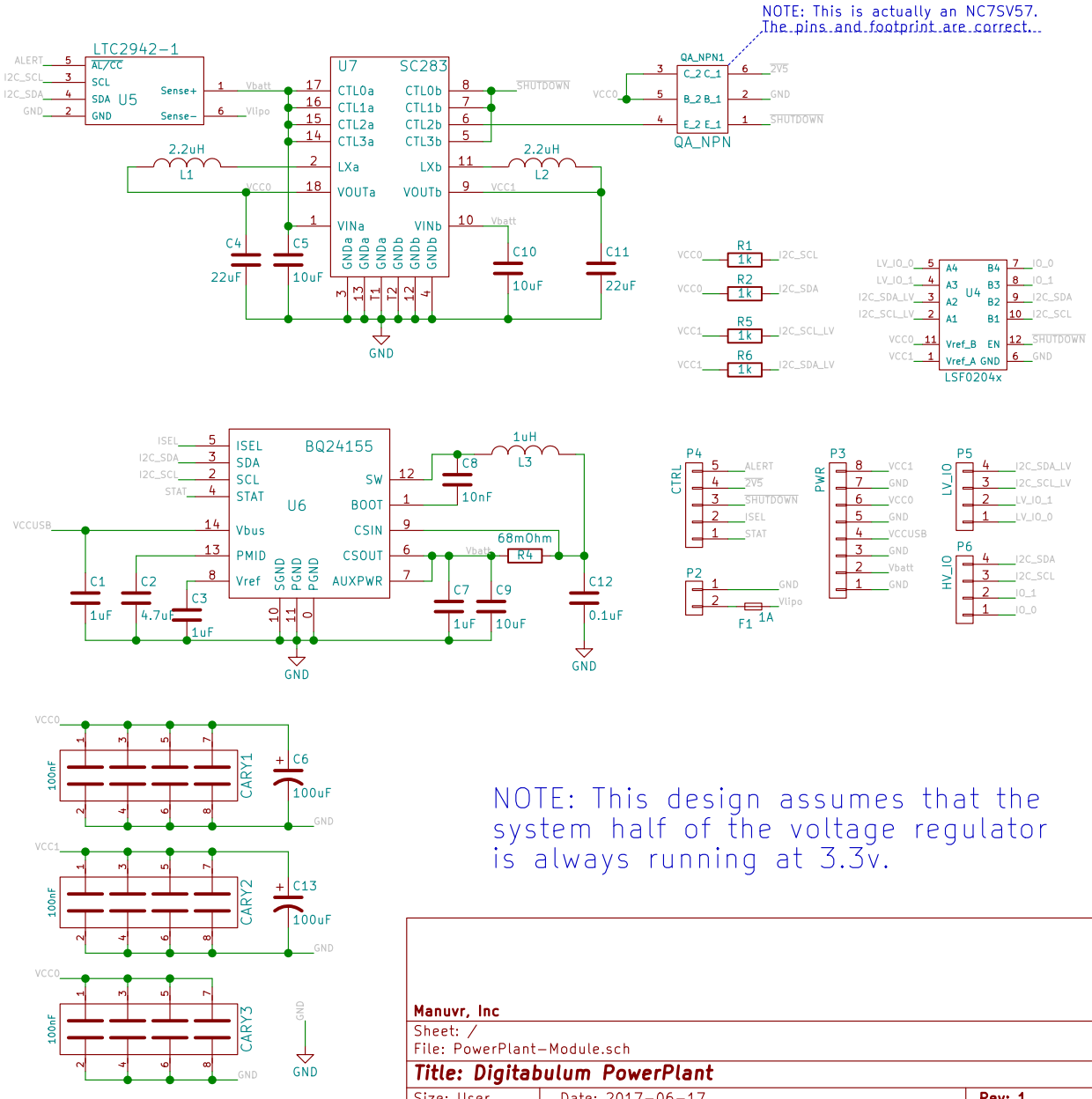

NOTE: This design assumes that the system half of the voltage regulator is always running at 3.3v.

Manuvr, Inc

Sheet: /

File: PowerPlant-Module.sch

Title: Digitabulum PowerPlant

Size: User	Date: 2017-06-17	**Rev: 1**
KiCad E.D.A. kicad 4.0.4-stable		Id: 1/1