Project Report on

WallAce

Submission to ***The Robotics Club – SNIST*** *as a part of* ***Post Induction'24***

Team No – 09

THE ROBOTICS CLUB

Integrating Knowledge...

The Robotics Club – SNIST

Sreenidhi Institute of Science And Technology (Autonomous)

2023 – 2024

CERTIFICATE

This is the project work titled **"Wall Ace"** by **"Ch. Manvith, S. Ashish, T. Abhishek, T. Venkat Prasad, B. Induja, V. Vaibhavi, K. Dhakshinya Tulasi"**, under the executive of **T. Nikhil**, and is a record of the project work carried out by them during the year 2023-24 as a part of Post Induction'24 under the guidance and supervision of

Mr. B. Navyahaas
&
Mr. P. Phani Anirudh
Joint Secretary of Technical Affairs

Mr. G. Kovidh Addhish
President
The Robotics Club - SNIST

Dr. A. Purushotham
Faculty Advisor
Mechanical Department

ACKNOWLEDGEMENT

This project report is the outcome of the efforts of many people who have driven our passion to explore into the implementation of **Wall Ace**. We have received great guidance, encouragement and support from them and have learned a lot because of their willingness to share their knowledge and experience.

We thank our Joint Secretary of Technical Affairs **Mr. B. Navyahaas and Mr. P. Phani Anirudh** for being with us till the end of the project completion.

We thank all members of the **Steering Body, Executive Body, Technical Advisory Board and Club's Incubation and Competence Committee** of **The Robotics Club - SNIST** for helping us with crucial parts of the project. We are deeply indebted to **Mr. G. Kovidh Addhish– President**, **Mr. R. Surya Prakash – Vice President**, **Mr. P. Aarushraj – General Secretary** and **Mr. V. S. S. Sankeerth – SAB Chairman The Robotics Club - SNIST** respectively and also every other person who spared their valuable time without any hesitation whenever we wanted.

We also thank our faculty advisor **Dr. A. Purushotham**, **Professor Mechanical Department**, who encouraged us during this project by rendering his help when needed.

THE ROBOTICS CLUB

Integrating Knowledge...

DECLARATION

The project work reported in the present thesis titled "**WallAce**" is a record of work done by **Team 09** in **The Robotics Club - SNIST** as a part of **Post Induction'24.**

No part of the thesis is copied from books/journals/Internet and wherever the portion is taken, the same has been duly referred in the text. The report is based on the project work done entirely by Team 09 and not copied from any other source.

Name Of Student :

Ch. Manvith, Email: 23311A0525@cse.sreenidhi.edu.in,

B. Induja, Email: 23311A05M1@cse.sreenidhi.edu.in,

T. Abhishek, Email: 23311A05R5@cse.sreenidhi.edu.in,

S. Ashish, Email: 23311A0502@cse.sreenidhi.edu.in,

K. Dhakshinya, Email: 23311A05Q8@cse.sreenidhi.edu.in,

Vaibhavi, Email: 23311A05E7@cse.sreenidhi.edu.in,

T. Venkat Prasad, Email: 23311A6632@aiml.sreenidhi.edu.in

THE ROBOTICS CLUB

Integrating Knowledge...

ABSTRACT

The Problem Statement :

In the construction and maintenance industries, painting the exteriors of tall buildings presents significant safety risks and labour challenges. Traditional methods require workers to hang from great heights, increasing the chance of accidents and injuries. These manual processes are not only labour-intensive but also prone to inefficiencies, such as uneven paint application and delays caused by weather conditions or worker fatigue. Additionally, these methods lead to higher costs due to the extended time and manpower required. There is a growing need for a safer, more efficient automated solution that can streamline the painting process, reduce labour dependency, and ensure consistent, high-quality results across various building heights and surfaces.

THE TEAM'S APPROACH TO SOLVE THE PROBLEM:

To address these challenges, we propose an innovative solution: WallAce, a semi-autonomous bot designed to paint the exteriors of tall buildings. The bot consists of two parts; one moves horizontally along the wall (X-axis), while the other hangs vertically (Y-axis) to perform the painting task. The vertical component is equipped with a paint roller, a paint dispenser, and a pallet to store paint. A pulley mechanism enables smooth vertical movement while ensuring adherence to the wall. The horizontal component features a rack and pinion mechanism, allowing it to move forward efficiently. Once the vertical component finishes painting one lane in the Y direction, a sensor detects the end of that section and sends a signal to the X-component, prompting it to move slightly forward. This coordinated movement ensures complete coverage of the wall while optimizing the painting process.

THE ROBOTICS CLUB

Integrating Knowledge...

LIST OF CONTENTS

S NO.	TITLE	PAGE NO.
	ACKNOWLEDGEMENT	ii
	DECLARATION	iii
	ABSTRACT	iv
1	**INTRODUCTION**	
	1.1 INTRODUCTION	1
	1.2 PURPOSE OF THE PROJECT	1
	1.3 EXISTING SYSTEMS	2
	1.4 BLOCK DIAGRAM OF EXISTING SYSTEM	2
	1.5 LIMITATIONS OF EXISTING SYSTEMS	3
	1.6 PROJECT ARCHITECTURE	3
2	**LITERATURE REVIEW**	
	2.1 LITERATURE SURVEY	4
3	**PROPOSED SYSTEM**	
	3.1 PROPOSED SYSTEM	5
	3.2 ADVANTAGES OF PROPOSED SYSTEM	5
	3.3 HARDWARE REQUIREMENTS	6
	3.4 SOFTWARE REQUIREMENTS	12
4	**WORKING OF PROPOSED SYSTEM**	
	4.1 BLOCK DIAGRAM	14
	4.2 WORKING	15
	4.3 CIRCUIT DIAGRAM	15
	4.4 CAD	16
5	**RESULTS**	17
6	**CONCLUSION AND FUTURE SCOPE**	
	6.1 CONCLUSION	18
	6.2 FUTURE SCOPE	18
7	**REFERENCES**	19
8	**SOURCE CODE**	20

THE ROBOTICS CLUB
Integrating Knowledge...

LIST OF FIGURES AND TABLES

S.NO.	FIGURE NO.	TITLE OF FIGURES	PAGE NO.
1	1.4.1	BLOCK DIAGRAM OF EXISTING SYSTEM	2
2	3.3.1	ESP32	6
3	3.3.2	BREAD BOARD	6
4	3.3.3	RAINBOW WIRES	6
5	3.3.4	MOTOR DRIVER(A4988)	7
6	3.3.5	LEAD ACID	7
7	3.3.6	ULTRA SONIC	7
8	3.3.7	STEPPER MOTOR (NEMA 17)	8
9	3.3.8	PAINT ROLLER	8
10	3.3.9	PULLEY	8
11	3.3.10	BUCK BOSSTER	9
12	3.3.11	CAPACITOR	9
13	3.3.12	SPRING	9
14	3.3.13	WHEELS	10
15	3.3.14	CHASIS	10
16	3.3.15	SERVO MOTOR	10
17	3.3.16	RACK AND PINION	11
18	3.4.1	ARDUINO IDE	11
19	3.4.2	FUSION 360	12
20	3.4.3	FRITZING	12
21	4.1	BLOCK DIAGRAM	13
22	4.3	CIRCUIT DIAGRAM	14
23	4.4	CAD	15

THE ROBOTICS CLUB
Integrating Knowledge...

CHAPTER 1

INTRODUCTION

1.1 INTRODUCTION :

The WallAce project introduces an innovative solution for automated wall painting, leveraging advanced robotics and IoT technology to enhance efficiency and safety in the construction and maintenance industries. The system integrates two ESP32 microcontrollers to facilitate wireless communication between two primary components: the X-axis and Y-axis units.

The X-axis component, managed by a NEMA 17 stepper motor, controls the horizontal movement of the bot. This unit includes a pulley mechanism that ensures precise and smooth navigation along the wall. On the other hand, the Y-axis component, also driven by a NEMA 17 stepper motor, is responsible for vertical movement. This unit is equipped with a sophisticated paint dispensing system, which includes a paint roller, a servo motor, and a spring mechanism. The servo motor operates the paint dispenser, allowing the roller to dip into the paint efficiently.

A rack and pinion system further enhances the functionality of the paint roller by controlling its front and back movement. This mechanism ensures that the roller can dip into the paint and retract without touching the wall during movement, thus preventing any unwanted marks. One ESP32 module is integrated into the X-axis component, while the other is in the Y-axis component, enabling seamless wireless communication and eliminating the need for cumbersome wires.

When the bot reaches the end of the wall, it shifts along the X-axis and resumes painting the adjacent section. This process continues systematically until the entire wall is uniformly painted. WallAce exemplifies the integration of robotics and IoT for practical, real-world applications, providing a safer and more efficient alternative to traditional manual painting methods.

1.2 PURPOSE OF THE PROJECT :

The primary objective of the WallAce project is to develop a semi-autonomous robotic system that revolutionizes the process of painting the exteriors of tall buildings. By integrating advanced robotics and IoT technologies, WallAce aims to enhance safety by minimizing the risk of accidents and injuries associated with manual painting at great heights. The project seeks to improve efficiency by streamlining the painting process with precise and consistent application, reducing the time and labour required compared to traditional methods.

Additionally, WallAce aims to ensure high-quality results through controlled and systematic application, regardless of building height or surface irregularities. By decreasing reliance on manual labor in hazardous conditions, the project aims to reduce labor dependency while optimizing resource utilization with precise control over the paint dispensing mechanism. Furthermore, the modular and scalable design of WallAce facilitates its adaptation for various building types and sizes.

THE ROBOTICS CLUB
Integrating Knowledge...

1.3 EXISTING SYSTEMS :

OUTOBOT:

robotic system that can clean building exteriors using water jets or give new coats of paint is now ready to serve customers in Singapore. It is co-developed by local pioneer in automated controls and biometric contactless systems ELID Technology International and Nanyang Technological University, Singapore (NTU Singapore).

Named OutoBot, this patent-pending automation is locally built and will improve productivity while enhancing workplace safety. It needs only half the manpower to run and can work for longer hours as compared to manual methods.

It has a robotic arm equipped with a camera and a spray nozzle that can shoot high-pressure water jets to clean surfaces or to spray paint. No painters or cleaners are required to be on the system's specially built gondola.

WALL PAINTING BOT:

The SinglePass Inkjet Printer may claim versatility and high-resolution capabilities for wall painting, but it falls short when it comes to practical application on high-rise buildings. While it's marketed as a solution for various surfaces like brick, painted walls, and glass, it doesn't address the challenges of painting at great heights. The machines are designed for more grounded, accessible surfaces, making them unsuitable for tasks that involve working on the exteriors of tall buildings where safety and accessibility are major concerns. Without the capability to operate in the air or manage the unique demands of high-rise painting, this system might end up being more of a hassle than a help for those looking to tackle larger, more complex projects. Essentially, it lacks the functionality needed to replace traditional methods for high-altitude work, leaving a significant gap in its supposed versatility and usefulness.

1.4 BLOCK DIAGRAM OF EXISTING SYSTEM :

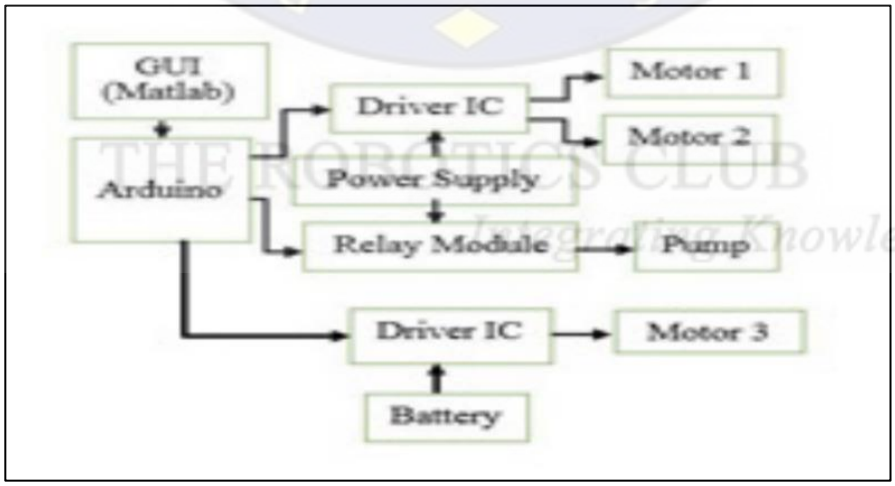

Fig. 1.4

1.5 LIMITATIONS OF EXISTING SYSTEMS :

The robot system in question is engineered to operate via cables supported by pulleys attached to a wall, with DC geared motors precisely controlling its positioning to meet specific coordinates. Despite its innovative approach to automated painting, several limitations need to be addressed. Mechanical wear and tear could compromise precision and control over time, making it challenging to achieve exact coordinates. The robot's range of movement is confined to the length of the wall, which restricts its effectiveness in complex environments. Frequent maintenance may be necessary due to potential wear on cables and motors. Additionally, ensuring an even paint application could be problematic due to variations in the roller's pressure and speed, while the hose and pump system might be susceptible to clogging. The initial setup could be time-consuming and may require specialized training for operators. Furthermore, the system's reliance on a consistent power supply could pose challenges in areas with unstable electricity. To optimize the efficiency and reliability of this system, these limitations must be carefully considered and addressed.

1.6 PROJECT ARCHITECTURE :

The Robot is designed to hang through the cables which are being supported by pulleys attached to the wall. DC geared motors are connected at the rear end of the cables to control positioning of robot at required co-ordinates. When robot is at initial position (0, 0), initial length of cable 1 is zero, whereas length of cable 2 is the distance between two pulleys (i.e. length of the wall). Required position of the robot is manipulated using geared motors. Robot has reciprocating mechanism in which the roller slides upward and downward motion for the given stroke length (S). Paint is transferred to roller through hose pipe from the inner cross section of the roller handle with the help of pump implemented in the system.

The prototype is fabricated as per the design and bill of materials. Robot is fabricated with frame on which the mechanism is placed. Motor 1 and 2 are fixed to the ground. Pulleys are fixed at top corners of the wall. Rope will pass through pulleys whose one end is fixed to the robots edge and the other to the motor fixed on the ground. Control system developed will actuate the motors to run the prototype depending on the commands provided by the user. User feeds command from the GUI based on the command rope winds and unwinds the rope to position the robot at required location.

THE ROBOTICS CLUB
Integrating Knowledge...

CHAPTER 2

LITERATURE REVIEW

2.1 LITERATURE SURVEY :

The evolution of technology in construction has led to the development of various automated systems aimed at enhancing efficiency and safety, including exterior wall painting robots. These robots, highlighted by Mohammad Zaid and Arockia Selvakumar (2016), exemplify how automation and robotics can significantly improve construction tasks. The literature review synthesizes findings from multiple studies on construction automation and robotics, addressing their implications for tasks like wall painting. It also identifies gaps in current research and suggests future directions.

Robotics' application in construction is multifaceted, with significant improvements in safety and efficiency. For instance, Craveiro et al. (2019) discuss additive manufacturing's potential in Construction 4.0, while Ghaffar et al. (2018) and Aghimien et al. (2019) emphasize robotics in sustainable practices and various construction tasks. Asadi et al. (2018) introduce "Pictobot," showcasing robotics' adaptability in painting. Despite advancements, challenges like technological integration and organizational barriers persist. Li and Kassem (2021) explore blockchain's potential in construction, while Bademosi and Issa (2021) highlight adoption barriers. Addressing these challenges and gaps, including performance metrics, human-robot collaboration, and technological integration, is crucial for successful deployment. The insights from this review guide future studies, emphasizing the importance of automation in enhancing construction safety and efficiency.

THE ROBOTICS CLUB
Integrating Knowledge...

CHAPTER 3

PROPOSED SYSTEM

3.1 PROPOSED SYSTEM :

The WallAce project introduces a cutting-edge solution for automated wall painting, utilizing advanced robotics and IoT technology to boost efficiency and safety in construction and maintenance. This system features two ESP32 microcontrollers that enable wireless communication between the X-axis and Y-axis units. The X-axis unit, powered by a NEMA 17 stepper motor, oversees the bot's horizontal movement, facilitated by a pulley system that ensures precise and smooth navigation. Conversely, the Y-axis unit, also driven by a NEMA 17 stepper motor, manages vertical movement and houses a sophisticated paint dispensing mechanism. This mechanism includes a paint roller, a servo motor, and a spring system, with the servo motor efficiently operating the paint dispenser.

Further enhancing the paint roller's functionality, a rack and pinion system controls its forward and backward movement, allowing the roller to dip into the paint and retract without touching the wall, thus avoiding any unwanted marks. One ESP32 module is embedded in the X-axis component, while the other resides in the Y-axis component, ensuring seamless wireless communication and eliminating the need for cumbersome wires. As the bot completes one section of the wall, it shifts horizontally along the X-axis and continues painting the next section, ensuring a uniform application across the entire wall.

WallAce stands as a prime example of how robotics and IoT can be effectively integrated for practical applications. This innovative system provides a safer and more efficient alternative to traditional manual painting methods, showcasing significant advancements in construction technology. By systematically covering the entire wall with paint, WallAce not only improves efficiency but also enhances the safety of painting operations, making it a valuable tool in the construction and maintenance industries.

3.2 ADVANTAGES OF PROPOSED SYSTEM :

The WallAce project offers several advantages over other robotic systems described. Firstly, WallAce employs advanced robotics and IoT technology to enhance efficiency and safety in wall painting. Its use of two ESP32 microcontrollers for wireless communication between the X-axis and Y-axis units ensures seamless and precise control of the bot's movements. The integration of NEMA 17 stepper motors facilitates accurate horizontal and vertical navigation, while the sophisticated paint dispensing mechanism, including a paint roller, servo motor, and rack and pinion system, ensures consistent paint application without unwanted marks. This level of automation and precision is not present in the other robots, which rely on manual manipulation and a more basic pulley system.

Furthermore, WallAce's design allows for systematic and uniform wall painting, with the ability to shift horizontally and continue painting adjacent sections. This automated process significantly reduces the risk of human error and enhances overall efficiency. In contrast, other robots require manual setup and operation, which can be time-consuming and less efficient.

3.3 HARDWARE REQUIREMENTS :

3.3.1 ESP 32 :

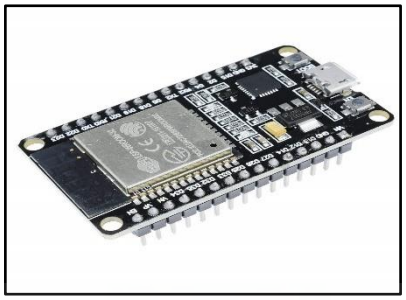

Fig. 3.3.1

ESP32 is a series of low-cost, low-power system-on-chip microcontrollers with integrated Wi-Fi and dual-mode Bluetooth. The ESP32 series employs either a Tensilica Xtensa LX6 microprocessor in both dual-core and single-core variations, an Xtensa LX7 dual-core microprocessor, or a single-core microprocessor and includes built-in antenna switches, RF balun, power amplifier, low-noise receive amplifier, filters, and power-management modules. Commonly found either on device specific PCBs or on a range of development boards with GPIO pins and various connectors depending on the model and manufacturer of the board.

3.3.2 Bread Board :

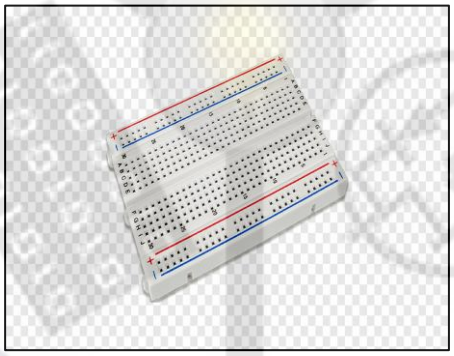

Fig. 3.3.2

A breadboard, solderless breadboard, or protoboard is a construction base used to build semi-permanent prototypes of electronic circuits. Unlike a perfboard or stripboard, breadboards do not require soldering or destruction of tracks and are hence reusable. For this reason, breadboards are also popular with students and in technological education.

3.3.3 Rainbow Wires :

Fig. 3.3.3

THE ROBOTICS CLUB
Integrating Knowledge...

A ribbon cable is a cable with many conducting wires running parallel to each other on the same flat plane. As a result, the cable is wide and flat. Its name comes from its resemblance to a piece of ribbon.

3.3.4 Motor driver (A4988) :

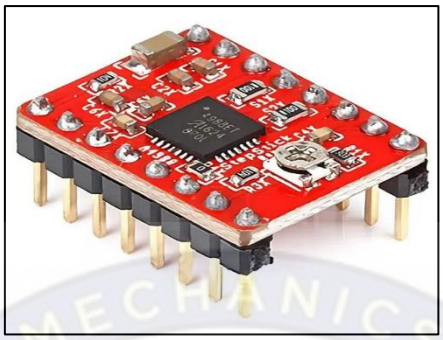

Fig. 3.3.4

The A4988 is a stepper motor driver board that has an A4988 chip that enables control of stepper motors through arduino type programming firmware and software. The A4988 is an utterly tested and proven solution to drive stepper motors in RepRap 3D printers, and this fact should not be overlooked.

3.3.5 Lead Acid :

Fig. 3.3.5

The lead–acid battery is a type of rechargeable battery first invented in 1859 by French physicist Gaston Planté. It is the first type of rechargeable battery ever created. Compared to modern rechargeable batteries, lead–acid batteries have relatively low energy density. Despite this, they are able to supply high surge currents. These features, along with their low cost, make them attractive for use in motor vehicles to provide the high current required by starter motors. Lead–acid batteries suffer from relatively short cycle lifespan (usually less than 500 deep cycles) and overall lifespan, as well as long charging times

3.3.6 Ultra Sonic Sensor :

Fig. 3.3.6

The HC-SR04 ultrasonic distance sensor uses sonar to determine distance to an object with stable readings and high accuracy of 3mm. The module includes ultrasonic transmitter, receiver and control circuit. In order to generate the ultrasound, you have to set the trig on high state for 10 microseconds. The trig pin will send out the sonic burst which travels at the speed of sound. The soundwave will be bounced back once it interacts with a solid or liquid and will then be received in the echo pin. The distance between the sensor and the object will be calculated using the time of travel.

3.3.7 Stepper Motor (NEMA 17):

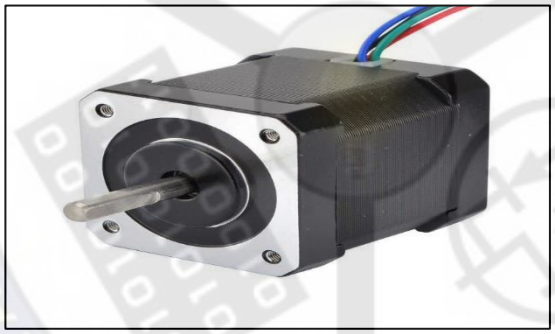

Fig. 3.3.7

A NEMA 17 stepper motor is a stepper motor with a 1.7 x 1.7 inch (43.18 x 43.18 mm) faceplate. NEMA 17 is a Brushless DC electric motor that rotates in a series of small and discrete angular steps. Stepper motors can be set to any given step position without needing a position sensor for feedback. The step position can be rapidly increased or decreased to create continuous rotation, or the motor can be ordered to actively hold its position at one given step. Motors vary in size, speed, step resolution, and torque.

3.3.8 Paint Roller :

Fig. 3.3.8

A **paint roller** is a paint application tool used for painting large flat surfaces rapidly and efficiently.

3.3.9 Pulley :

Fig. 3.3.9

A pulley is a wheel on an axle or shaft enabling a taut cable or belt passing over the wheel to move and change direction or transfer power between itself and a shaft. A sheave or pulley wheel is a pulley using an axle supported by a frame or shell (block) to guide a cable or exert force.

3.3.10 Buck Booster :

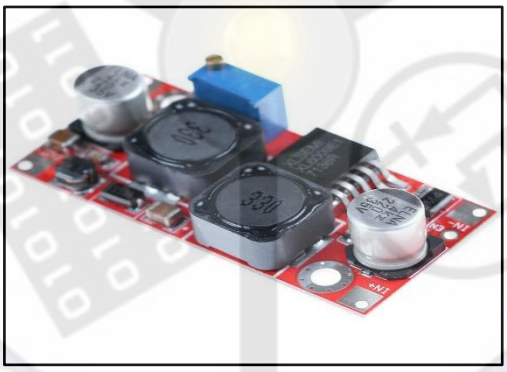

Fig. 3.3.10

The buck–boost converter is a type of DC-to-DC converter that has an output voltage magnitude that is either greater than or less than the input voltage magnitude. It is equivalent to a flyback converter using a single inductor instead of a transformer.

3.3.11 Capacitor :

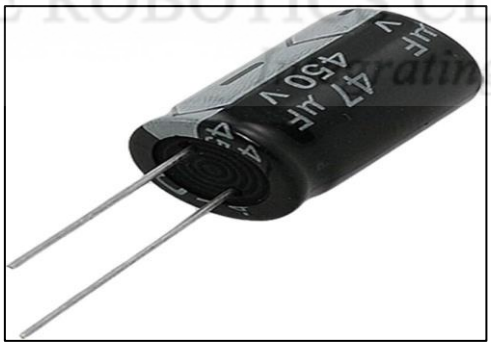

Fig. 3.3.11

THE ROBOTICS CLUB
...rating Knowledge...

capacitor is a device that stores electrical energy by accumulating electric charges on two closely spaced surfaces that are insulated from each other. The capacitor was originally known as the condenser

3.3.12 Spring :

Fig. 3.3.12

A coil spring is a mechanical device that is typically used to store energy and subsequently release it, to absorb shock, or to maintain a force between contacting surfaces. They are made of an elastic material formed into the shape of a helix that returns to its natural length when unloaded.

3.3.13 Wheels :

Fig. 3.3.13

Wheels with a good grip are used so that the bot moves freely through the pipes. They reduce friction, making it easier to transport heavy loads and navigate obstacles. We can traverse through rough terrain as they have a good grip.

3.3.14 Chasis :

Fig. 3.3.14

THE ROBOTICS CLUB
Integrating Knowledge...

Chasis is the load-bearing framework of a manufactured object, which structurally supports the object in its construction and function. An example of a chassis is a vehicle frame, the underpart of a motor vehicle, on which the body is mounted; if the running gear such as wheels and transmission, and sometimes even the driver's seat, are included, then the assembly is described as a rolling chassis.

3.3.15 Servo Motor :

Fig. 3.3.15

A servomotor is a rotary or linear actuator that allows for precise control of angular or linear position, velocity, and acceleration in a mechanical system.[1][2] It constitutes part of a servomechanism, and consists of a suitable motor coupled to a sensor for position feedback and a controller (often a dedicated module designed specifically for servomotors).

3.3.16 Rack and Pinion :

Fig. 3.3.16

A rack and pinion is a type of linear actuator that comprises a circular gear (the *pinion*) engaging a linear gear Together, they convert between rotational motion and linear motion: rotating the pinion causes the rack to be driven in a line. Conversely, moving the rack linearly will cause the pinion to rotate.

THE ROBOTICS CLUB
Integrating Knowledge...

3.4 SOFTWARE REQUIREMENTS

3.4.1 Arduino IDE :

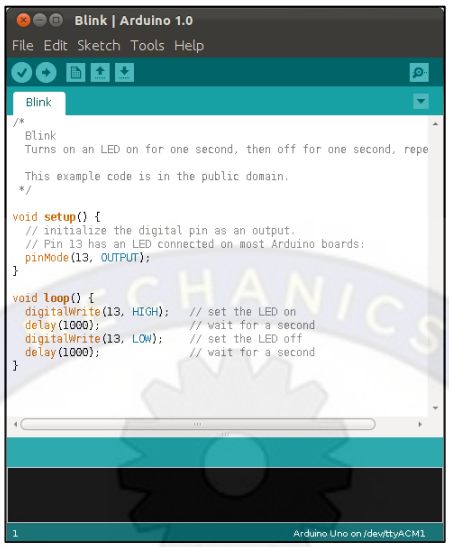

Fig. 3.4.1

The Arduino integrated development environment (IDE) is a cross-platform application (for Microsoft Windows, macOS, and Linux) that is based on Processing IDE which is written in Java. It uses the Wiring API as programming style and HAL. It includes a code editor with features such as text cutting and pasting, searching and replacing text, automatic indenting, brace matching, and syntax highlighting, and provides simple one-click mechanisms to compile and upload programs to an Arduino board.

3.4.2 Fusion 360 :

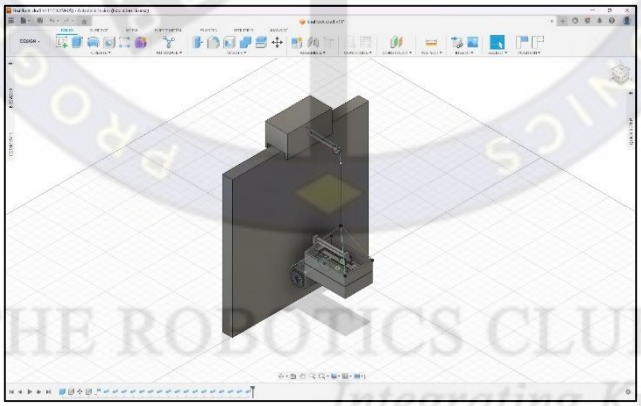

Fig. 3.4.2

Autodesk Fusion is a commercial computer-aided design (CAD), computer-aided manufacturing (CAM), computer-aided engineering (CAE) and printed circuit board (PCB) design software application, developed by Autodesk. It is available for Windows, macOS and web browsers, with simplified applications available for Android and iOS. Fusion is licensed as a paid subscription, with a free limited home-based, non-commercial personal edition available.

THE ROBOTICS CLUB
Integrating Knowledge...

3.4.3 Fritzing :

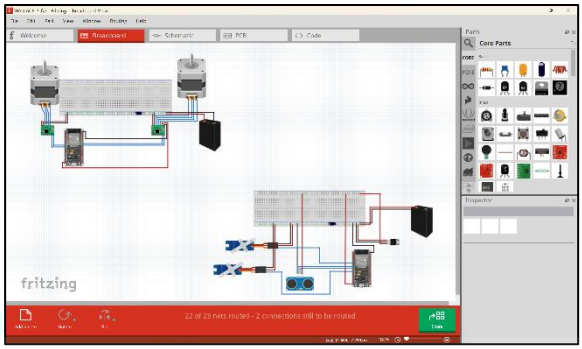

Fig. 3.4.3

Fritzing is an open-source initiative to develop amateur or hobby CAD software for the design of electronics hardware, intended to allow designers and artists to build more permanent circuits from prototypes. It was developed at the University of Applied Sciences Potsdam.

THE ROBOTICS CLUB
Integrating Knowledge...

CHAPTER 4
WORKING OF PROPOSED SYSTEM 4.1 BLOCK DIAGRAM :

4.2 BLOCK DIAGRAM:

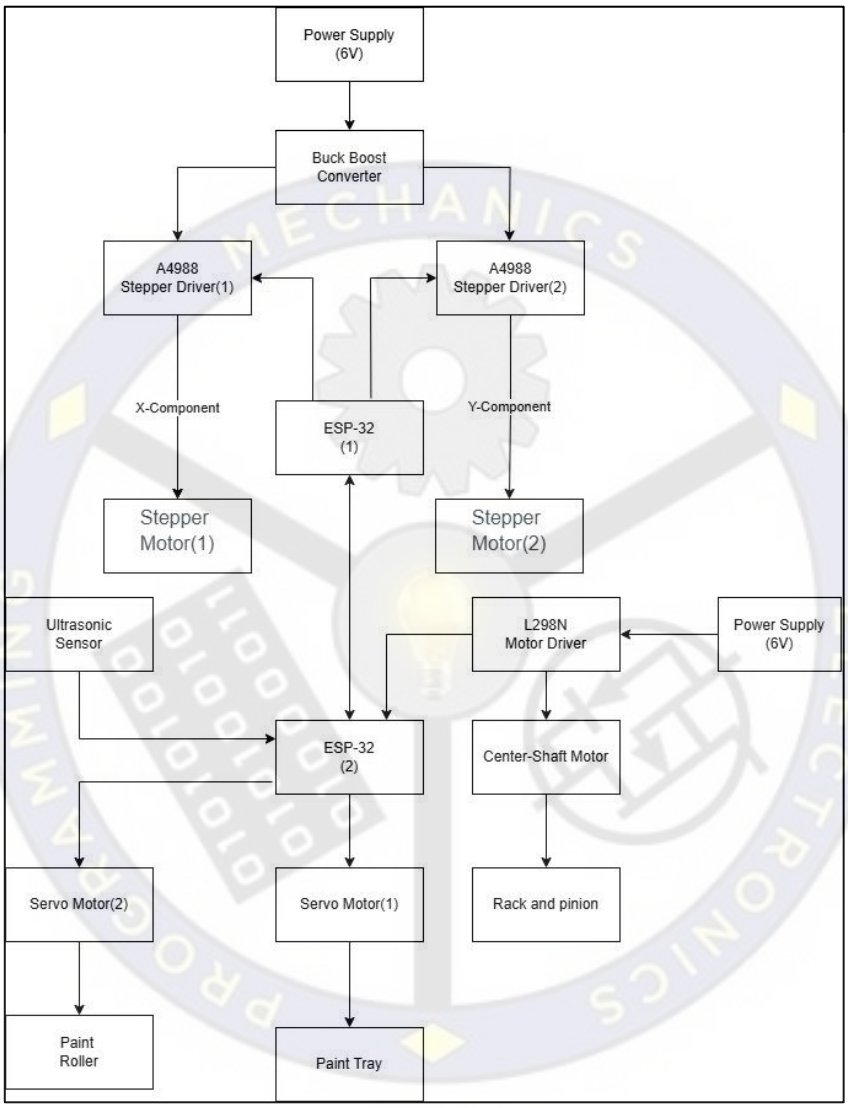

Fig. 4.1

THE ROBOTICS CLUB
Integrating Knowledge...

4.2 WORKING :

The WallAce project offers an innovative solution for automated wall painting, utilizing cutting-edge robotics and IoT technology to improve efficiency and safety in the construction and maintenance sectors. The system employs two ESP32 microcontrollers to enable wireless communication between its two main components: the X-axis and Y-axis units.

The X-axis unit, driven by a NEMA 17 stepper motor, controls the bot's horizontal movement and features a pulley mechanism that ensures smooth and precise navigation along the wall. Meanwhile, the Y-axis unit, also powered by a NEMA 17 stepper motor, manages vertical movement. This unit is equipped with an advanced paint dispensing system, including a paint roller, a servo motor, and a spring mechanism. The servo motor operates the paint dispenser, allowing the roller to dip into the paint with ease.

Additionally, a rack and pinion system enhances the paint roller's functionality by managing its forward and backward movements, ensuring the roller dips into the paint and retracts without touching the wall, thus avoiding any unwanted marks. One ESP32 module is integrated into the X-axis unit, and the other into the Y-axis unit, facilitating seamless wireless communication and eliminating the need for cumbersome wires.

As the bot finishes one section of the wall, it shifts horizontally along the X-axis and continues painting the adjacent section, ensuring a consistent and uniform paint application across the entire wall. WallAce showcases the effective integration of robotics and IoT for practical applications, offering a safer and more efficient alternative to traditional manual painting methods.

4.3 CIRCUIT DIAGRAM :

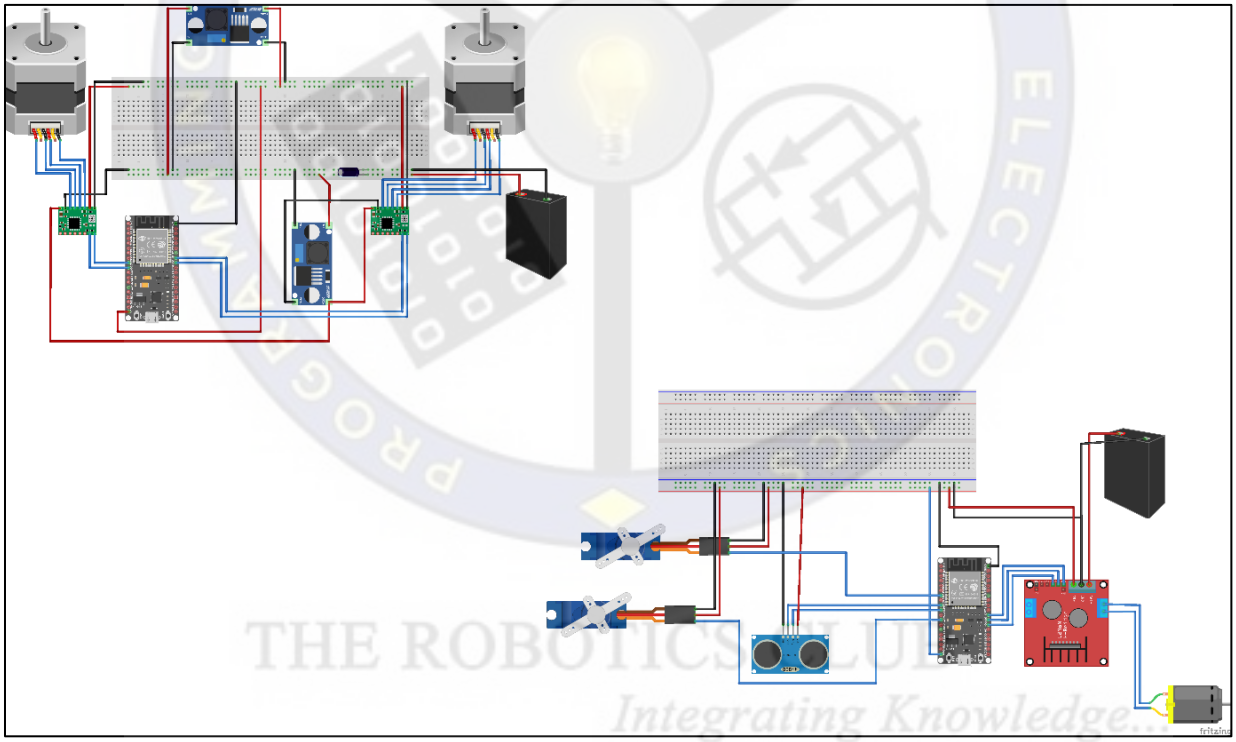

Fig. 4.3

4.4 CAD :

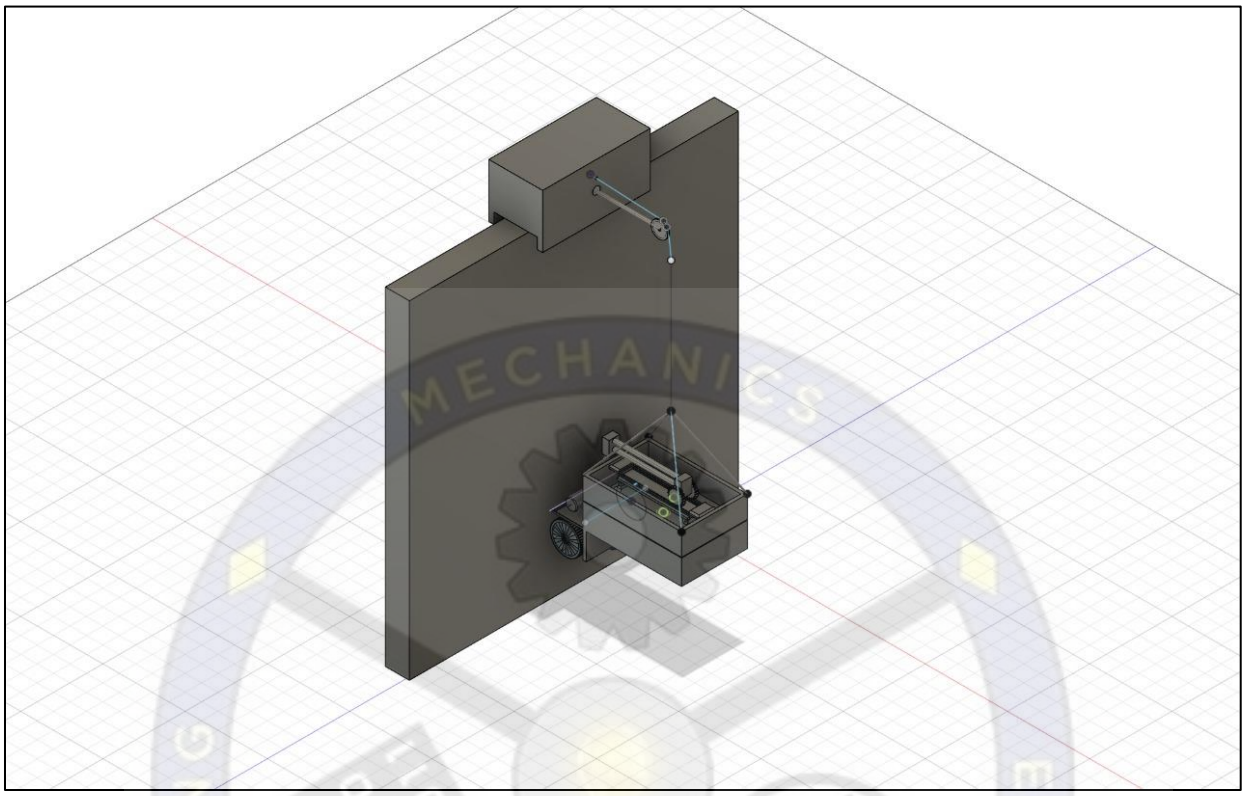

Fig. 4.4

THE ROBOTICS CLUB
Integrating Knowledge...

CHAPTER 5

RESULTS

The WallAce project stands out as a pioneering solution in the realm of automated wall painting, showcasing the effective integration of advanced robotics and IoT technology. By employing two ESP32 microcontrollers for seamless wireless communication between the X-axis and Y-axis units, WallAce achieves precise and smooth navigation, as well as efficient paint application. The system's design, featuring NEMA 17 stepper motors, a sophisticated paint dispensing mechanism, and a rack and pinion system, ensures a consistent and uniform painting process. This innovative approach not only enhances efficiency but also significantly improves safety by reducing the need for manual labor. Overall, WallAce exemplifies a significant advancement in construction technology, offering a practical and superior alternative to traditional manual painting methods.

THE ROBOTICS CLUB
Integrating Knowledge...

CHAPTER 6

CONCLUSION AND FUTURE SCOPE

6.1 CONCLUSION :

The WallAce exterior wall painting bot presents a groundbreaking solution to the challenges posed by traditional exterior painting methods, particularly for tall buildings. The problem of safety risks, inefficiencies, and high labour costs in the construction and maintenance industries is effectively addressed by this semi-autonomous bot. WallAce's innovative design, with its dual components (horizontal and vertical), allows it to move across the wall seamlessly while delivering precise, consistent, and efficient paint application. The integration of advanced sensors and a coordinated movement system ensures that the painting process is not only faster but also safer, reducing the dependency on human labour and minimizing the risks associated with working at great heights.

By automating the painting process, WallAce is poised to significantly lower the costs and time associated with exterior painting projects. It offers a safer alternative to traditional methods, reducing the likelihood of accidents and improving the overall safety standards in the construction industry. Furthermore, its ability to deliver high-quality, uniform coverage across various surfaces ensures a more professional finish with minimal waste, which contributes to sustainability goals.

6.2 FUTURE SCOPE :

The future potential of WallAce is vast, with numerous opportunities for enhancement and expanded applications as technology evolves. Future iterations could incorporate advanced AI algorithms and machine learning, enabling real-time decisions on painting techniques, surface analysis, and environmental factors while continuously improving performance. Enhanced flexibility could allow WallAce to adapt to diverse surfaces, including curved, irregular, or intricate facades, making it suitable for a broader range of projects. Improvements in battery technology or energy efficiency could extend operational time, reducing downtime and increasing productivity for large-scale projects. WallAce could also integrate with building maintenance systems, evolving into a multi-functional robot capable of cleaning, inspecting, and repairing surfaces. Collaboration with other automated construction technologies, such as drones or robotic scaffolding, could streamline exterior building maintenance and revolutionize the construction industry. Furthermore, WallAce could be tailored to meet global regulatory and environmental standards, enabling deployment worldwide and addressing universal challenges in building maintenance. By integrating advancements in AI, autonomy, and functionality, WallAce has the potential to redefine exterior painting and contribute to the future of automated construction and maintenance.

CHAPTER 7

REFERENCES

[1] Indian Journal of Science and Technology (IJST), Development of Exterior Wall Painting Robot (**DOI**: 10.17485/ijst/2016/v9i38/102580)

[2] Journal of Image Processing and Intelligent Remote Sensing (JIPIRS), Automatic Wall Painting Robot Automatic Wall Painting Robot (DOI:https://doi.org/10.55529/jipirs.26.11.22)

[3] OutoBot, https://phys.org/news/2017-03-outobot-robot-high-rise.html

THE ROBOTICS CLUB
Integrating Knowledge...

CHAPTER 8

SOURCE CODE

4.5.1 X-COMPONENT :

```
#include <esp_now.h>
#include <WiFi.h>
#include <AccelStepper.h>

#define STEP_PIN_X 14
#define DIR_PIN_X 12
#define STEP_PIN_Y 13
#define DIR_PIN_Y 15
const int dis=200;
const int wait_time=15000;
AccelStepper stepperX(AccelStepper::DRIVER, STEP_PIN_X, DIR_PIN_X);
AccelStepper stepperY(AccelStepper::DRIVER, STEP_PIN_Y, DIR_PIN_Y);
// Message structure
struct Message {
  int distance;
};
long yPosition=0;
long ytp=0;//y target position
unsigned long lmt=0;//last move time
Message receivedMsg;
bool msg = false;
//const esp_now_recv_info -> structure defined in esp-now library , it contains mac address
void onReceive(const esp_now_recv_info* recv_info, const uint8_t* incomingData, int len)
{
  memcpy(&receivedMsg, incomingData, sizeof(receivedMsg));
  // Serial.print("Alert received! Distance: ");
```

THE ROBOTICS CLUB
Integrating Knowledge...

```
  // Serial.println(receivedMsg.distance);
  if(receivedMsg.distance<10)
    msg = true;
}
void setup() {
  Serial.begin(115200);
  // Set ESP32 as a Wi-Fi station like a phone
  WiFi.mode(WIFI_STA);
  Serial.println("ESP-NOW Slave Initialized");

  // Initialize ESP-NOW
  if (esp_now_init() != ESP_OK) {
    Serial.println("Error initializing ESP-NOW");




    return;
  }

  // Register receive callback
  esp_now_register_recv_cb(onReceive);
  stepperX.setMaxSpeed(1000);
  stepperX.setAcceleration(500);
  stepperY.setMaxSpeed(800);
  stepperY.setAcceleration(400);
  // stepperY.setSpeed(200);
}

void loop() {
```

THE ROBOTICS CLUB
Integrating Knowledge...

```
if (!msg)
{
  if(millis()-lmt>=wait_time)
  {
    ytp-=dis;//set the position to ytp to move the stepper motor by that many steps;
    // 200 steps=15cm
    stepperY.moveTo(ytp);
    while (stepperY.distanceToGo() != 0)
    {
      stepperY.run();
    }
    lmt=millis();
  }
}
 if (msg) {

  stepperX.moveTo(500);  //
  stepperX.runToPosition();  // Block until Stepper X reaches the target position

  // Now move Stepper Y up to its starting position
  while (yPosition < 0) {  // While Y is below start position
    stepperY.setSpeed(200);  // set the speed to move
    stepperY.runSpeed();  // move stepper as the speed is mentioned
    yPosition++;   // Increase position as it moves up
  }
  msg=false;
  ytp=0;
 }
 delay(10);
```

THE ROBOTICS CLUB
Integrating Knowledge...

```
}
```

4.5.2 Y-COMPONENT :

```
#include <esp_now.h>
#include <WiFi.h>
#include <ESP32Servo.h>

#define IN1 25
#define IN2 26
#define ENA 33
#define TRIG_PIN 5   // Ultrasonic sensor TRIG pin
#define ECHO_PIN 18  // Ultrasonic sensor ECHO pin
#define THRESHOLD 10 // Distance threshold in cm

Servo roll;
Servo gate;
// MAC Address of the slave ESP32
uint8_t slaveAddress[] = {0xCC, 0xDB, 0xA7, 0x2F, 0x84, 0xCC};

// Message to send
struct Message {
  int distance;
};
Message msg;
// go to line 46 to know this.
void onSent(const uint8_t *mac_addr, esp_now_send_status_t status) {
  Serial.println(status == ESP_NOW_SEND_SUCCESS ? "Success" : "Fail");
}

void setup() {
```

THE ROBOTICS CLUB
Integrating Knowledge...

```
  pinMode(IN1, OUTPUT);
  pinMode(IN2, OUTPUT);
  pinMode(ENA, OUTPUT);
  Serial.begin(115200);
  gate.attach(21);
  roll.attach(20);
  roll.write(0);
  gate.write(0);

  // Set ESP32 as a Wi-Fi station
    WiFi.mode(WIFI_STA);

    // Initialize ESP-NOW
    if (esp_now_init() != ESP_OK) {
      Serial.println("Not Initialized");
      return;
    }
  // This function registers call back function such that when a msg is sent to the other device irrespective of the placing of the function the onsent finction will activate*
  esp_now_register_send_cb(onSent);

  // Add peer (slave)
  esp_now_peer_info_t peerInfo;//It is a structure by esp now to store the information this structure holds the details about the peer device such as its mac address.
  memcpy(peerInfo.peer_addr, slaveAddress, 6);

  peerInfo.channel = 0;//To keep the channel of the slave esp but since we are using the same wifi there is no need to use a specific channel
  peerInfo.encrypt = false;// There is no need to keep the msg encrypted so no issues.
```

THE ROBOTICS CLUB
Integrating Knowledge...

```
  if (esp_now_add_peer(&peerInfo) != ESP_OK) {
    Serial.println("Failed to add peer");
    return;
  }//it is used to check whether a peer(slave) is connected or not.

  pinMode(TRIG_PIN, OUTPUT);  // Set TRIG_PIN as output
  pinMode(ECHO_PIN, INPUT);   // Set ECHO_PIN as input
}

void loop() {
  long duration, distance;
  // dipping();
  gate.write(90);
  delay(3000);
  gate.write(0);
  unsigned long st = millis();//start time
  unsigned long moveDur= 15000; // 15 sec
  bool forw = true; // flag for direction

  while (millis() - st < moveDur) {
    if (forw) {
      rpforward(); // Move forward
    } else {
      rpbackward(); // Move backward
    }

    // Alternate between forward and backward every 3 seconds(assuming it would take the rack and pinion 3 sec to move forward)
    if (millis() - st >= 3000) {
```

THE ROBOTICS CLUB
Integrating Knowledge...

```
    forw = !forw;
    st = millis(); // Reset the timer to track next 3 seconds
  }
}
delay(1000);
rpforward();
delay(3000);
rpbackward();
// Trigger the ultrasonic pulse
digitalWrite(TRIG_PIN, LOW);
delayMicroseconds(2);
digitalWrite(TRIG_PIN, HIGH);
delayMicroseconds(10);
digitalWrite(TRIG_PIN, LOW);

// Measure the echo duration
duration = pulseIn(ECHO_PIN, HIGH);

// Calculate the distance in cm
distance = duration * 0.034 / 2;
Serial.print("Distance: ");
Serial.println(distance);

if (distance < THRESHOLD) {
  msg.distance = distance;

  // Send message to slave
  esp_now_send(slaveAddress, (uint8_t *)&msg, sizeof(msg));//It is used to send the msg structure to other slave.
```

THE ROBOTICS CLUB
Integrating Knowledge...