Smart Prayer Clock System

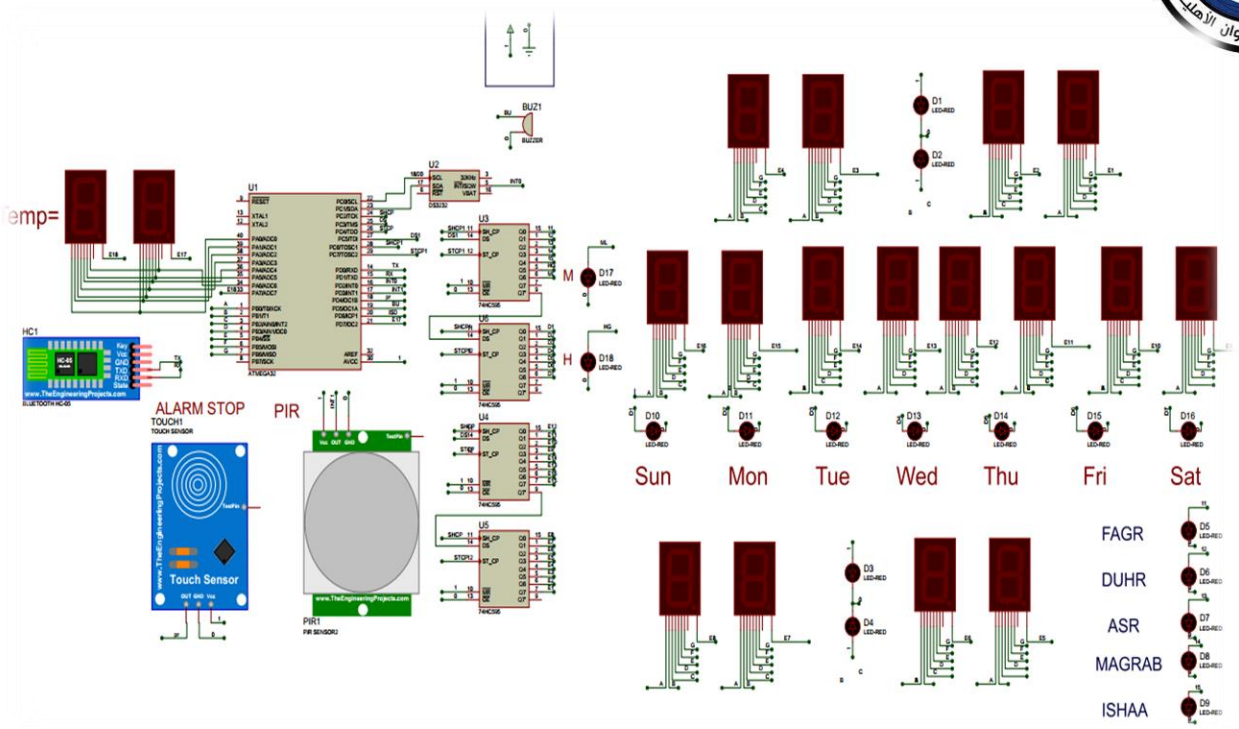

Names:

- زياد طارق أحمد.
- احمد محمد احمد فؤاد المنيلاوي.
- أحمد سيف الإسلام أحمد حامد.
- أحمد ايمن سيد.
- ساره هشام حسن.

Under Supervision Of: Dr. Hossam Eldin Ali

Faculty Of Engineering
Intelligent Systems Engineering
Helwan National University
2025

Introduction: Smart Prayer Clock System

This project presents the design and implementation of a **Smart Prayer Clock** that combines both timekeeping and Islamic functionality with modern smart technologies. The system aims to provide an integrated, user-friendly solution for daily time management, religious observance, and environmental awareness.

Key Features:

1. **Time and Date Display:**
   - Displays the **current time** (hours and minutes).
   - Supports both **Gregorian and Hijri calendars** for accurate Islamic date tracking.
2. **Prayer Times Display:**
   - Shows **daily Islamic prayer times** (Fajr, Dhuhr, Asr, Maghrib, and Isha).
   - **Adhan audio** is played automatically at the time of each prayer using a built-in speaker module.
3. **Temperature Monitoring:**
   - Displays the **current temperature from the RTC module** , offering real-time environmental information.
4. **Bluetooth Connectivity:**
   - The system is integrated with **Bluetooth technology**, allowing remote interaction via a **mobile application**.
   - Users can **set, update, and manage alarm times**, adjust prayer schedules, and configure other settings directly from the app.
5. **Alarm System:**
   - Includes a **programmable alarm** that can be set and disabled using the mobile app.
   - Also features a **capacitive touch button** to manually stop the alarm.
6. **Real-Time Clock (RTC):**
   - Utilizes the **DS3231 RTC module** to maintain accurate time and date even during power outages.
   - Also contain an embedded Temperature sensor .
7. **Power Saving Mode with PIR Sensor:**
   - Equipped with a **PIR (Passive Infrared) motion sensor** that detects presence controlled through the app.
   - The system enters a **low-power mode** when no motion is detected to conserve energy.

Components:

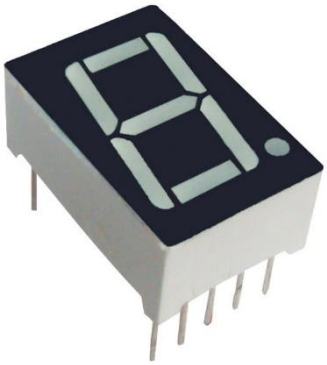

- (1) Atmega 32
- (18) 7-Segment (1inch & 0.8 inch)
- Shift registers 74HC595N
- RTC Module DS3231
- ISD Module & Speaker
- PIR Sensor
- Bluetooth Module (HC-05)
- Touch Sensor
- LEDs and Resistances
- Buzzer

Functionality:

1. **ATmega32 Microcontroller**
    - **Serves as the central processing unit of the project.**
    - **Manages all system operations including display control, sensor input, timekeeping, and communication.**
2. **7-Segment Displays (18 pieces - 1 inch & 0.8 inch)**
    - **Used to display the current time (hours and minutes), Hijri and Gregorian dates, and temperature.**
3. **Shift Registers (74HC595N)**
    - **Expands the number of output pins from the ATmega32.**
    - **Enables control of multiple 7-segment displays with fewer microcontroller pins.**
4. **RTC Module (DS3231)**
    - **Keeps accurate track of real-time clock and date.**

- **Retains time even when the main power is off, thanks to its backup battery.**
- **Also includes a temperature sensor used for environment monitoring.**

5. **ISD Module & Speaker**
    - **Stores and plays the Adhan (Islamic call to prayer) sound at the correct prayer times.**
    - **Connected to a speaker for clear audio output.**
6. **PIR Sensor**
    - **Detects motion in the surrounding environment.**
    - **disables display to save power when no one is nearby if I enabled the mode.**
7. **Bluetooth Module (HC-05)**
    - **Provides wireless connectivity with a mobile application.**
    - **Allows the user to set alarms, configure prayer times, control power modes, Time & Date ,offset of Hijri , Summer & Winter Time and more.**
8. **Touch Sensor**
    - **Capacitive touch sensor used to manually stop the alarm or Adhan.**
9. **LEDs and Resistors**
    - **LEDs are used to indicate status (e.g., days, hijri & miladi, prayers time).**
    - **Resistors are used to limit current and protect components like LEDs and microcontroller pins.**
10. **Buzzer**

- **Used to produce a simple sound alert for alarms or notifications.**

Circuit Diagram:

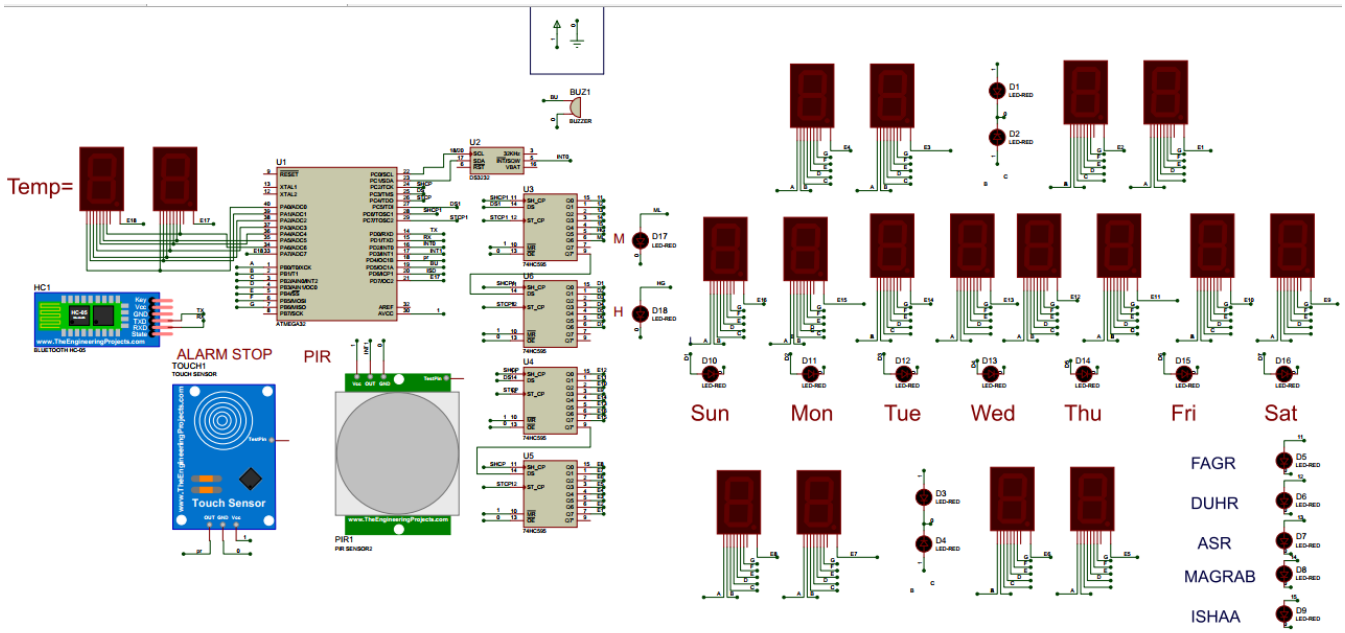

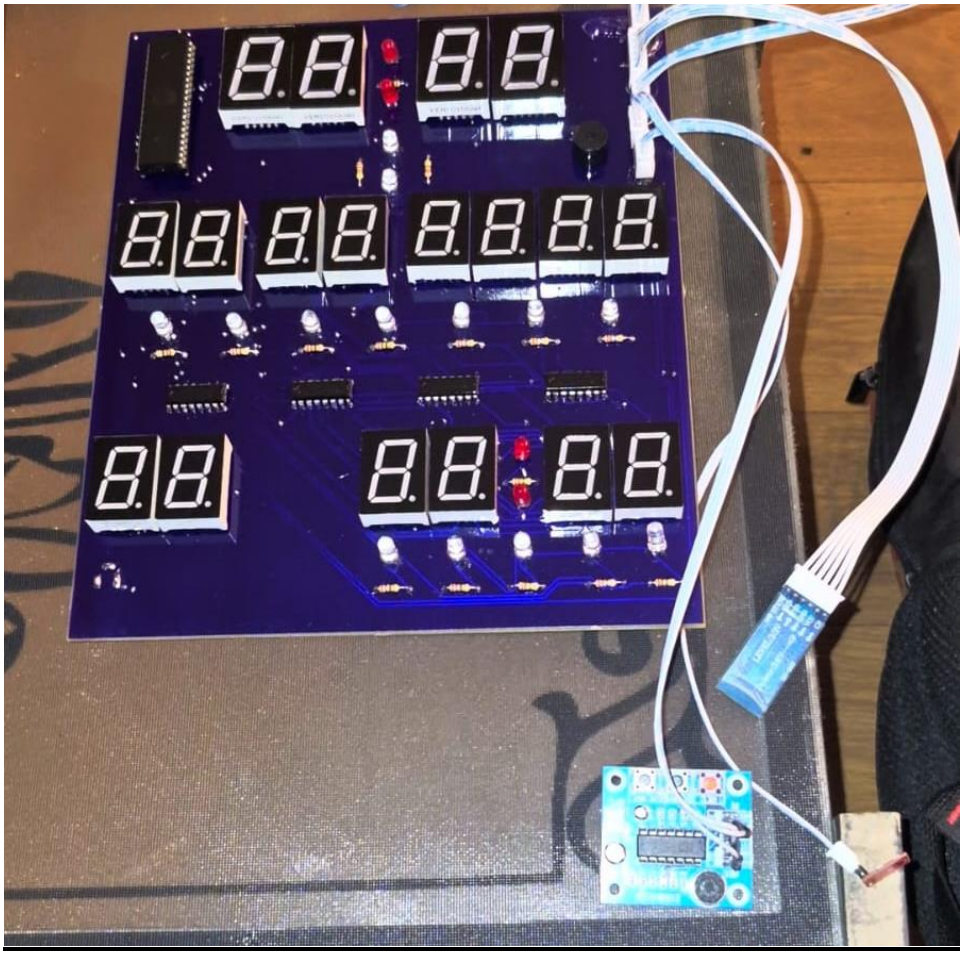

Datasheet:

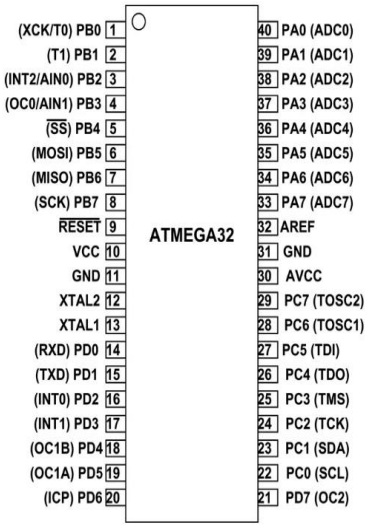
ATMEGA32
(XCK/T0) PB0 1
(T1) PB1 2
(INT2/AIN0) PB2 3
(OC0/AIN1) PB3 4
(SS) PB4 5
(MOSI) PB5 6
(MISO) PB6 7
(SCK) PB7 8
RESET 9
VCC 10
GND 11
XTAL2 12
XTAL1 13
(RXD) PD0 14
(TXD) PD1 15
(INT0) PD2 16
(INT1) PD3 17
(OC1B) PD4 18
(OC1A) PD5 19
(ICP) PD6 20
40 PA0 (ADC0)
39 PA1 (ADC1)
38 PA2 (ADC2)
37 PA3 (ADC3)
36 PA4 (ADC4)
35 PA5 (ADC5)
34 PA6 (ADC6)
33 PA7 (ADC7)
32 AREF
31 GND
30 AVCC
29 PC7 (TOSC2)
28 PC6 (TOSC1)
27 PC5 (TDI)
26 PC4 (TDO)
25 PC3 (TMS)
24 PC2 (TCK)
23 PC1 (SDA)
22 PC0 (SCL)
21 PD7 (OC2)

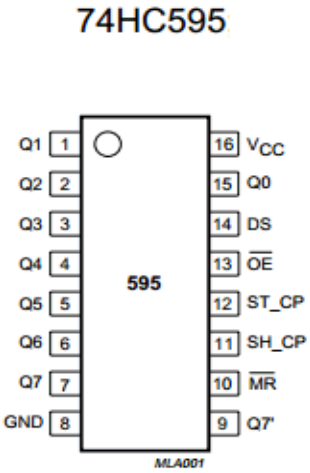
74HC595
595
Q1 1
Q2 2
Q3 3
Q4 4
Q5 5
Q6 6
Q7 7
GND 8
16 VCC
15 Q0
14 DS
13 OE
12 ST_CP
11 SH_CP
10 MR
9 Q7'
MLA001

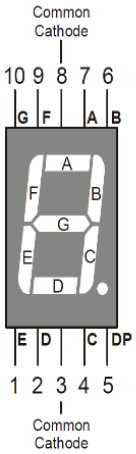
Common Cathode
10 9 8 7 6
G F A B
A
F B
G
E C
D
E D C DP
1 2 3 4 5
Common Cathode

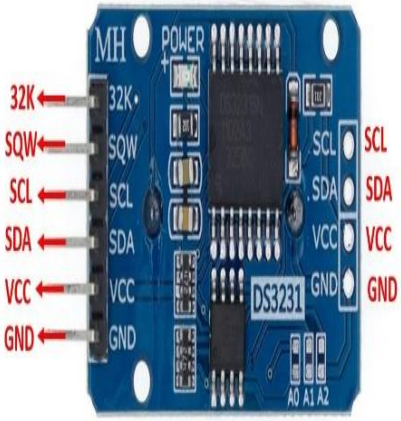
MH
POWER
32K
SQW
SCL
SDA
VCC
GND
DS3231
A0 A1 A2

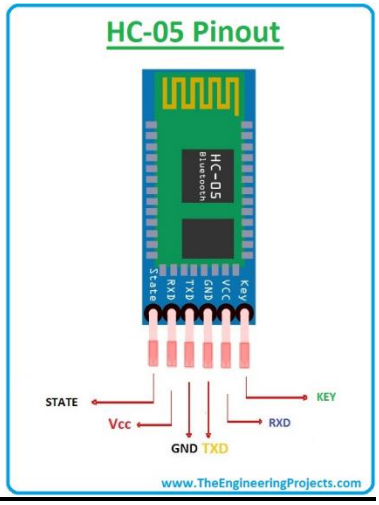
HC-05 Pinout
HC-05
Bluetooth
State
RXD
TXD
GND
VCC
Key
STATE
Vcc
GND TXD
KEY
RXD
www.TheEngineeringProjects.com

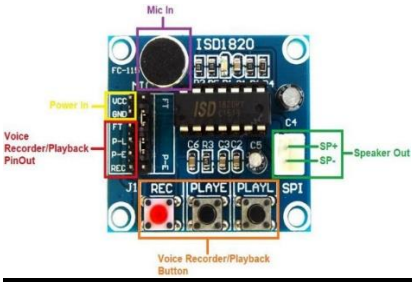
Mic In
ISD1820
Power In
Voice Recorder/Playback PinOut
SP+
SP-
Speaker Out
REC
PLAYE
PLAYL
SPI
Voice Recorder/Playback Button

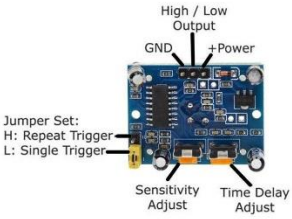
High / Low Output
GND
+Power
Jumper Set:
H: Repeat Trigger
L: Single Trigger
Sensitivity Adjust
Time Delay Adjust


GND
I/O
VCC

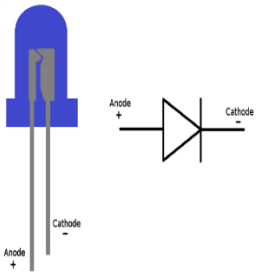
Anode +
Cathode -
Anode +
Cathode -

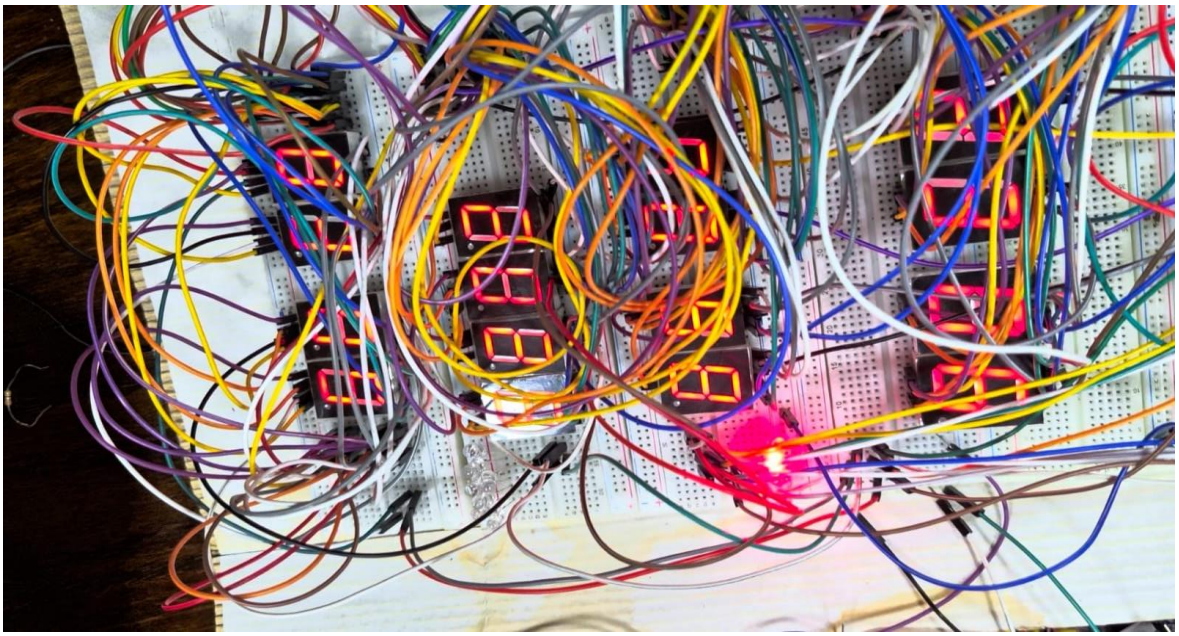

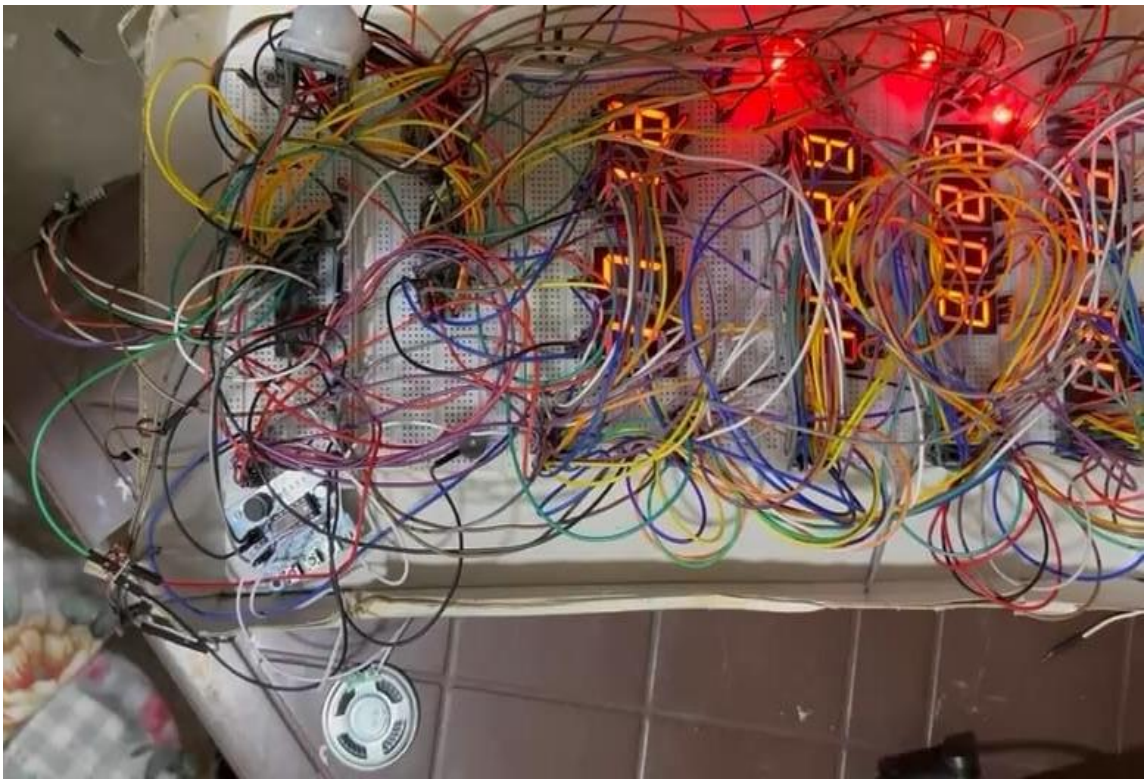

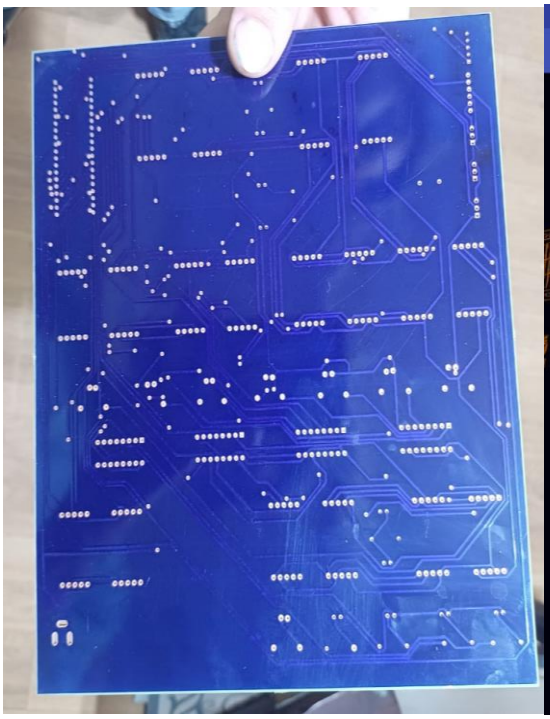

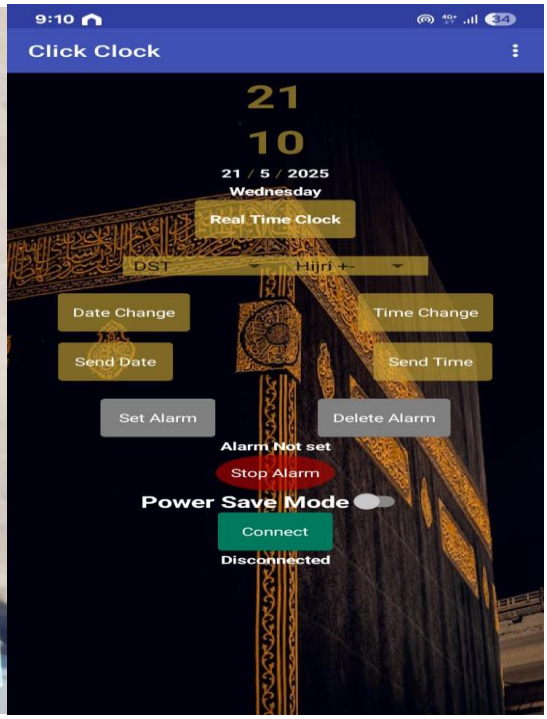
9:10
Click Clock
21
10
21 / 5 / 2025
Wednesday
Real Time Clock
DST
Hijri +-
Date Change
Time Change
Send Date
Send Time
Set Alarm
Delete Alarm
Alarm Not set
Stop Alarm
Power Save Mode
Connect
Disconnected

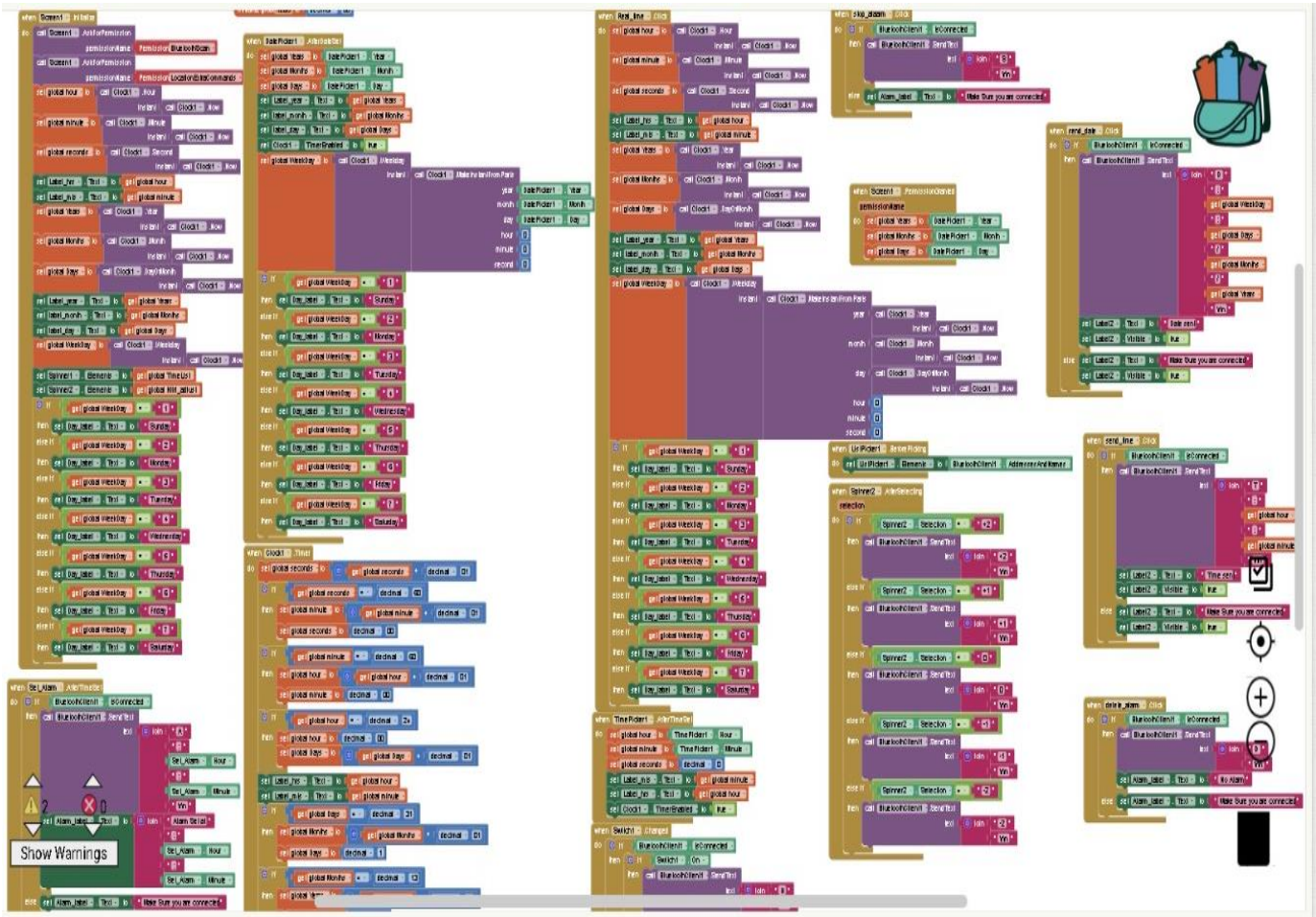
Show Warnings

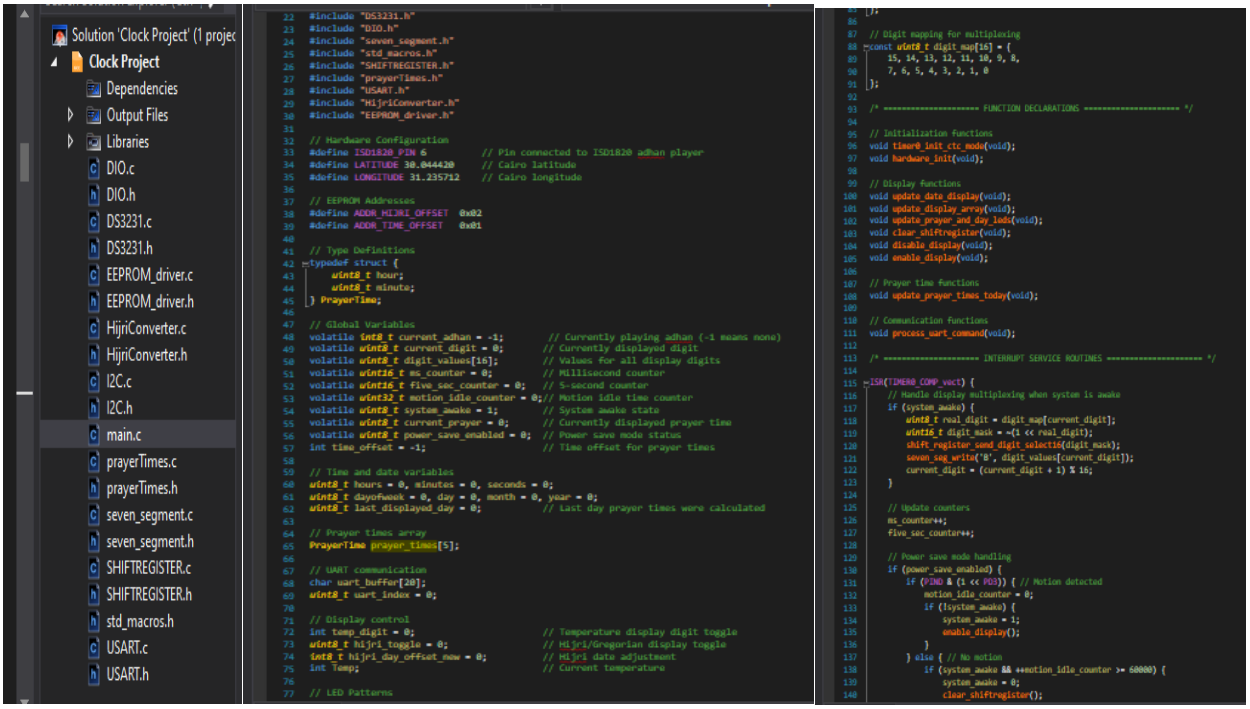
Solution 'Clock Project' (1 projec
Clock Project
Dependencies
Output Files
Libraries
DIO.c
DIO.h
DS3231.c
DS3231.h
EEPROM_driver.c
EEPROM_driver.h
HijriConverter.c
HijriConverter.h
I2C.c
I2C.h
main.c
prayerTimes.c
prayerTimes.h
seven_segment.c
seven_segment.h
SHIFTREGISTER.c
SHIFTREGISTER.h
std_macros.h
USART.c
USART.h

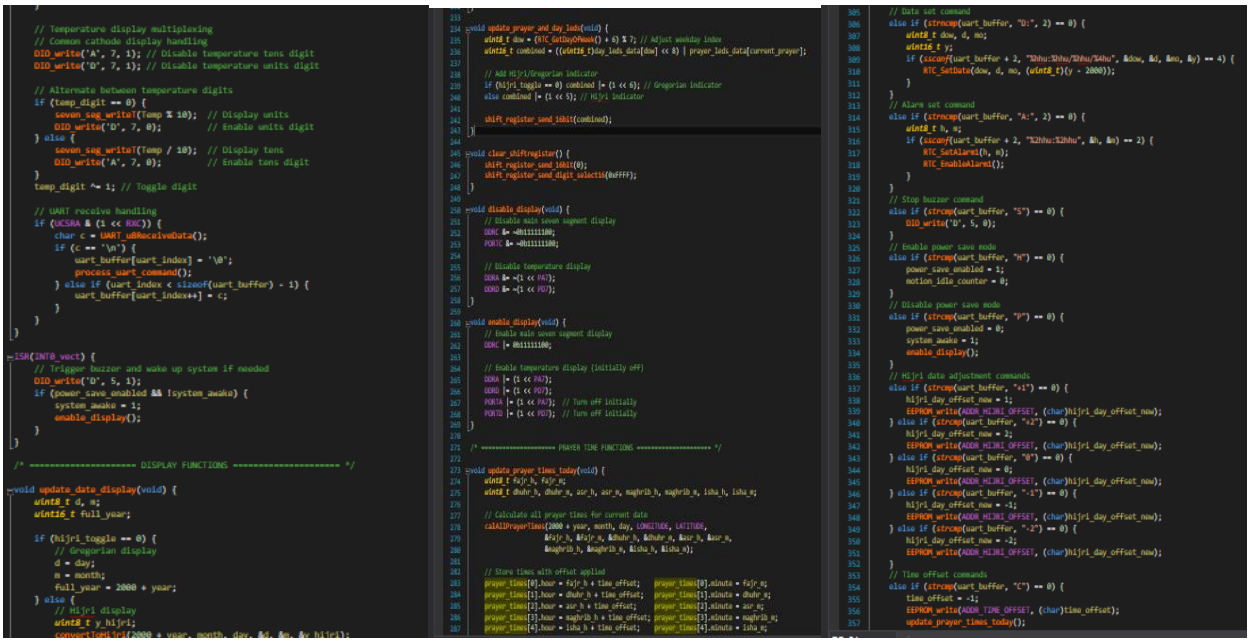

```c
    // Configure GPIO
    DIO_vsetPINDir('D', 3, 0); // PIR input
    DIO_vsetPINDir('D', 5, 1); // Buzzer output
    DIO_vsetPINDir('D', 2, 0); // INT0 input
    DIO_vsetPINDir('D', 7, 1); // Temperature digit control
    DIO_vsetPINDir('A', 7, 1); // Temperature digit control
    DIO_vsetPINDir('D', ISD1820_PIN, 1); // ISD1820 OUTPUT

    // Configure INT0 for falling edge
    MCUCR |= (1 << ISC01);
    MCUCR &= ~(1 << ISC00);
    GICR |= (1 << INT0);

    // Enable display
    enable_display();
}

/* ==================== MAIN FUNCTION ==================== */

int main(void) {
    // Initialize hardware
    hardware_init();
    timer0_init_ctc_mode();

    // Load settings from EEPROM
    hijri_day_offset_new = (int8_t)EEPROM_read(ADDR_HIJRI_OFFSET);
    time_offset = (int8_t)EEPROM_read(ADDR_TIME_OFFSET);

    // Clear any pending alarm flags
    RTC_ClearAlarmFlag();

    // Get initial time and date
    RTC_GetTime(&hours, &minutes, &seconds);
    RTC_GetDate(&dayofweek, &day, &month, &year);
    last_displayed_day = day;

    // Initialize prayer times and display
    update_prayer_times_today();
    update_display_array();
    update_prayer_and_day_leds();

    // Enable global interrupts
    sei();

    // Main loop
    while (1) {
        // Update every second
        if (ms_counter >= 1000) {
            ms_counter = 0;

            // Get current time and date
            RTC_GetTime(&hours, &minutes, &seconds);
```

```c
    update_display_array();
    update_prayer_and_day_leds();

    // Enable global interrupts
    sei();

    // Main loop
    while (1) {
        // Update every second
        if (ms_counter >= 1000) {
            ms_counter = 0;

            // Get current time and date
            RTC_GetTime(&hours, &minutes, &seconds);
            RTC_GetDate(&dayofweek, &day, &month, &year);
            update_display_array();

            // Update prayer times if day changed
            if (day != last_displayed_day) {
                last_displayed_day = day;
                update_prayer_times_today();
            }

            // Check for prayer times to trigger adhan
            for (int i = 0; i < 5; i++) {
                if (hours == prayer_times[i].hour && minutes == prayer_times[i].minute) {
                    if (current_adhan != i) {
                        current_adhan = i;
                        DIO_write('D', ISD1820_PIN, 1);
                        _delay_ms(200);  // Pulse to trigger ISD1820
                        DIO_write('D', ISD1820_PIN, 0);
                    }
                    break;
                }
            }

            // Reset adhan flag if time has passed
            if (current_adhan != -1 &&
                (hours != prayer_times[current_adhan].hour ||
                 minutes != prayer_times[current_adhan].minute)) {
                current_adhan = -1;
            }

            // Get current temperature
            Temp = DS3231_GetTemperature();
        }

        // Rotate displayed prayer every 5 seconds
        if (five_sec_counter >= 5000) {
            five_sec_counter = 0;
            current_prayer = (current_prayer + 1) % 5;
            update_display_array();
            update_prayer_and_day_leds();
            hijri_toggle ^= 1; // Toggle date display
        }
```

7 Segment 0.8" Common Cathode

8106AS-1

10.00 EGP

- 1 + Add to cart

Add to wishlist

Pick up from RAM Store
Shipping: 2-3 Business Days

Internal Reference: 7SEG0.8C

7 Segment 1.0" Common Cathode

KEM10106AH

18.00 EGP

- 1 + Add to cart

Add to wishlist

Pick up from RAM Store
Shipping: 2-3 Business Days

Internal Reference: 7SEG1.0C

ATMEGA32AU -8-bit AVR

LE 260.00

ADD TO CART

Share Tweet Pin it

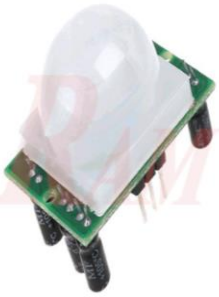

PIR Motion Sensor Module HC-SR501

PIR Motion Sensor Module

50.00 EGP

- 1 + Add to cart

Add to wishlist

Pick up from RAM Store
Shipping: 2-3 Business Days

Internal Reference: KIT.PIR.MODULE

All Products / Kit Touch Red Switch

Kit Touch Red Switch

TTP223 Touch Switch Sensor Module Self-Locking/No-Locking Capacitive Touching Switch Button

15.00 EGP

- 1 + Add to cart

Add to wishlist

Pick up from RAM Store
Shipping: 2-3 Business Days

Internal Reference: KIT.TOUCH.RED.1

All Products / LED 5mm Super Bright Red Color WR

LED 5mm Super Bright Red Color WR

0.50 EGP

- 1 + Add to cart

Add to wishlist

Pick up from RAM Store
Shipping: 2-3 Business Days

Internal Reference: LED.WR

74xx ICs

74595 (SN74HC595N)

Availability: In stock

Add to Wishlist Compare

8-bit Serial-to-Parallel Shift Register Tri-State with Output Latches.(DIP-16)

11.00 EGP

1 Add to cart

Sensors

Bluetooth Module HC-05 (6pin + Button)

Availability: In stock

Add to Wishlist Compare

Bluetooth Module HC-05 (6pin + Button)

210.00 EGP

1 Add to cart

Buzzers & Mic & Piezo

Small Buzzer 5V

Availability: In stock

Add to Wishlist Compare

Small Buzzer 5V (TMB12A05)

7.00 EGP

1 Add to cart

DS3231 High Precision Real Time Clock (RTC) with battery

LE 85.00

ADD TO CART

Share Tweet Pin it

Description Reviews

Sensors

ISD1820 Voice Record Module

Availability: In stock

Add to Wishlist Compare

ISD1820 Voice Record Module

120.00 EGP

1 Add to cart

Total ≈ 1000 EGP

Thank You