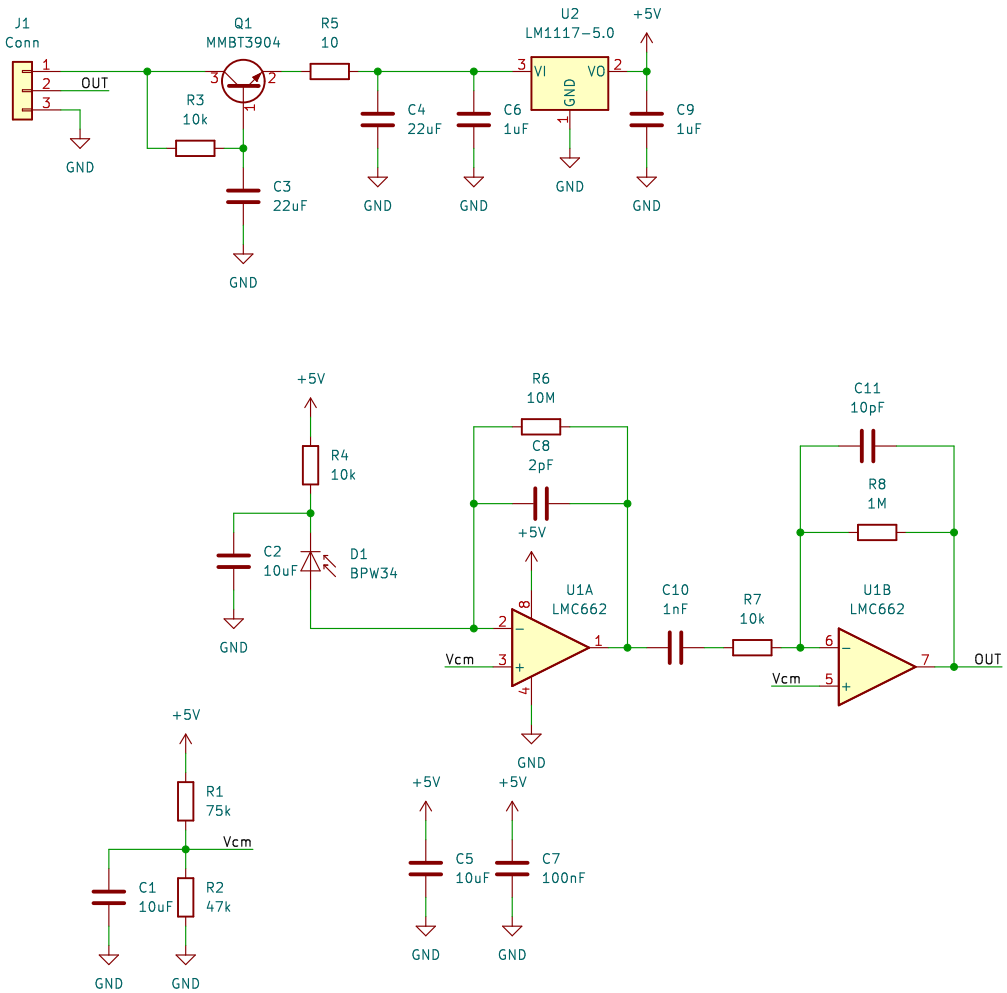
J1
Conn
1
2
3
OUT
GND
Q1
MMBT3904
3
2
1
R3
10k
C3
22uF
GND
R5
10
C4
22uF
GND
C6
1uF
GND
U2
LM1117-5.0
3
VI
VO
2
GND
1
GND
+5V
C9
1uF
GND
+5V
R4
10k
C2
10uF
D1
BPW34
GND
R6
10M
C8
2pF
+5V
U1A
LMC662
8
2
Vcm
3
4
1
GND
C10
1nF
R7
10k
C11
10pF
R8
1M
U1B
LMC662
6
Vcm
5
7
OUT
+5V
R1
75k
Vcm
C1
10uF
R2
47k
GND
GND
+5V
C5
10uF
GND
+5V
C7
100nF
GND