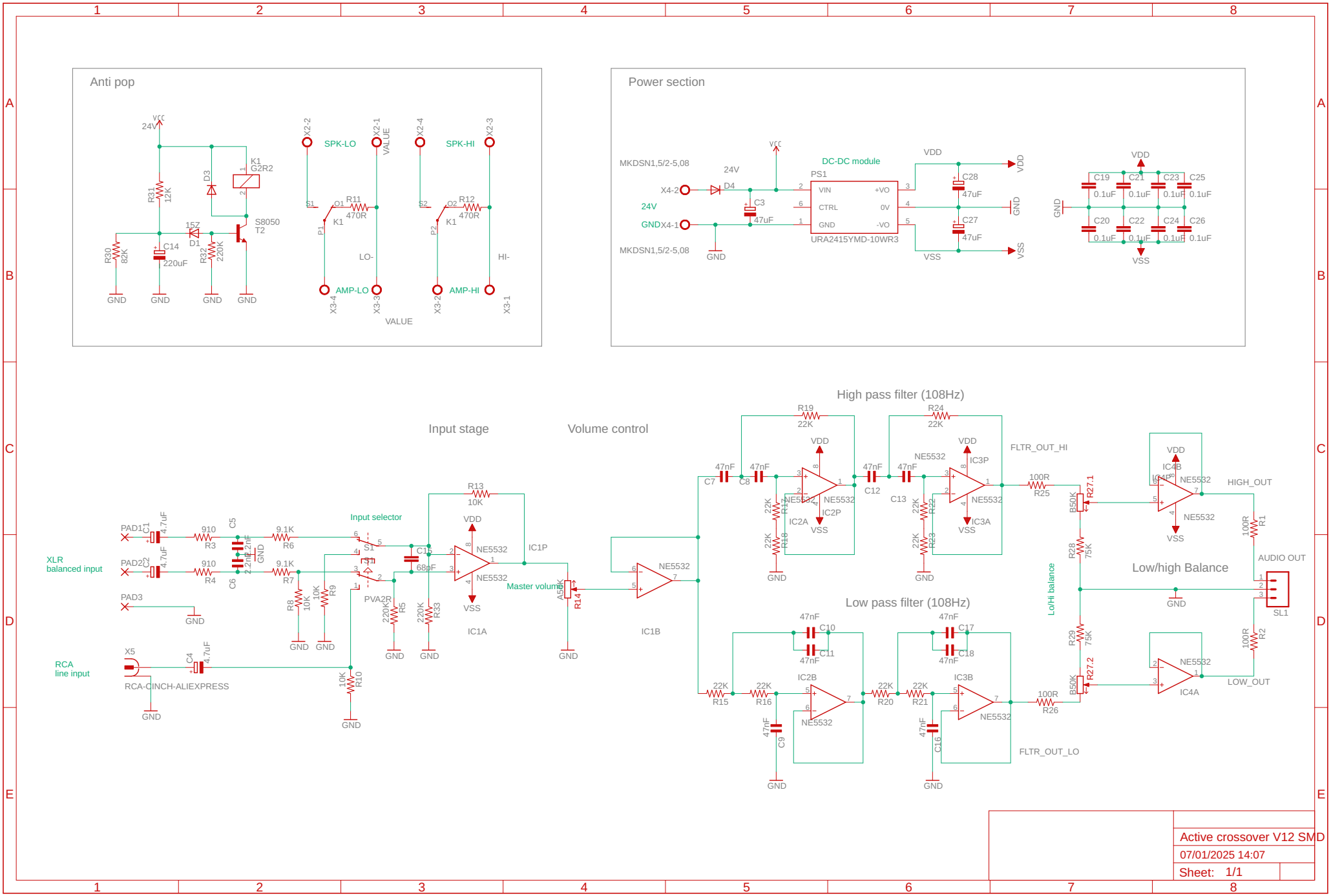
Anti pop
Power section
Input stage
Volume control
High pass filter (108Hz)
Low pass filter (108Hz)
Low/high Balance
XLR balanced input
RCA line input
Input selector
Master volume
DC-DC module
URA2415YMD-10WR3
NE5532
SPK-LO
SPK-HI
AMP-LO
AMP-HI
AUDIO OUT
HIGH_OUT
LOW_OUT
FLTR_OUT_HI
FLTR_OUT_LO
Lo/Hi balance
Active crossover V12 SMD
07/01/2025 14:07
Sheet: 1/1