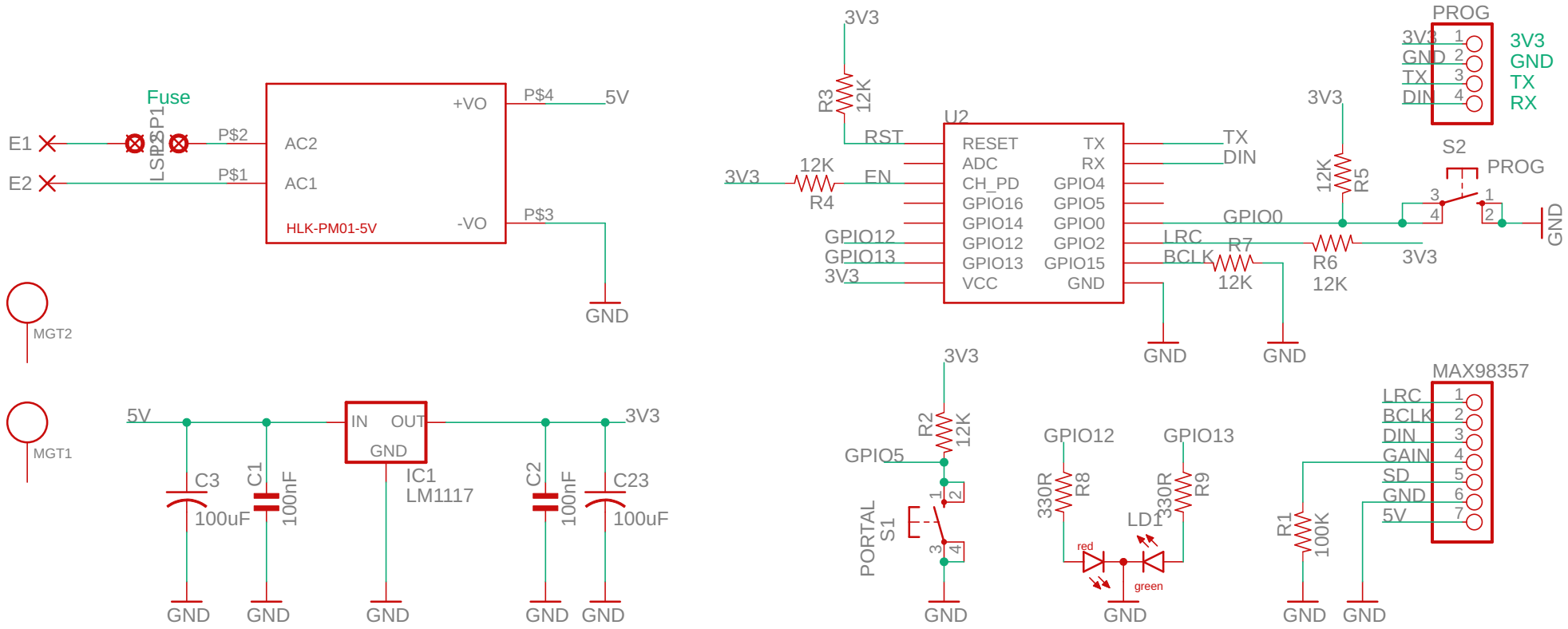
Fuse
E1
E2
LSP1
LSP2
P$2
P$1
AC2
AC1
+VO
-VO
HLK-PM01-5V
P$4
5V
P$3
GND
MGT2
MGT1
5V
IN
OUT
GND
IC1
LM1117
3V3
C3
100uF
C1
100nF
C2
100nF
C23
100uF
GND
3V3
R3
12K
RST
U2
RESET
ADC
CH_PD
GPIO16
GPIO14
GPIO12
GPIO13
VCC
TX
RX
GPIO4
GPIO5
GPIO0
GPIO2
GPIO15
GND
3V3
12K
R4
EN
GPIO12
GPIO13
3V3
TX
DIN
GPIO0
LRC
BCLK
R7
12K
R6
12K
12K
R5
3V3
PROG
3V3
GND
TX
DIN
3V3
GND
TX
RX
S2
PROG
GND
3V3
R2
12K
GPIO5
PORTAL
S1
GPIO12
GPIO13
330R
R8
330R
R9
LD1
red
green
MAX98357
LRC
BCLK
DIN
GAIN
SD
GND
5V
R1
100K