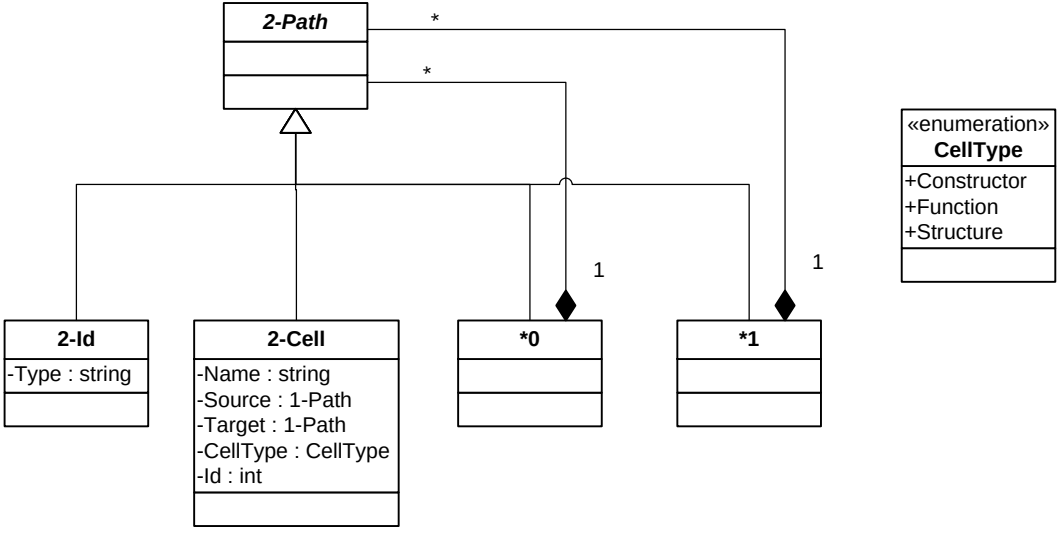
2-Path
*
*
1
1
«enumeration»
CellType
+Constructor
+Function
+Structure
2-Id
-Type : string
2-Cell
-Name : string
-Source : 1-Path
-Target : 1-Path
-CellType : CellType
-Id : int
*0
*1

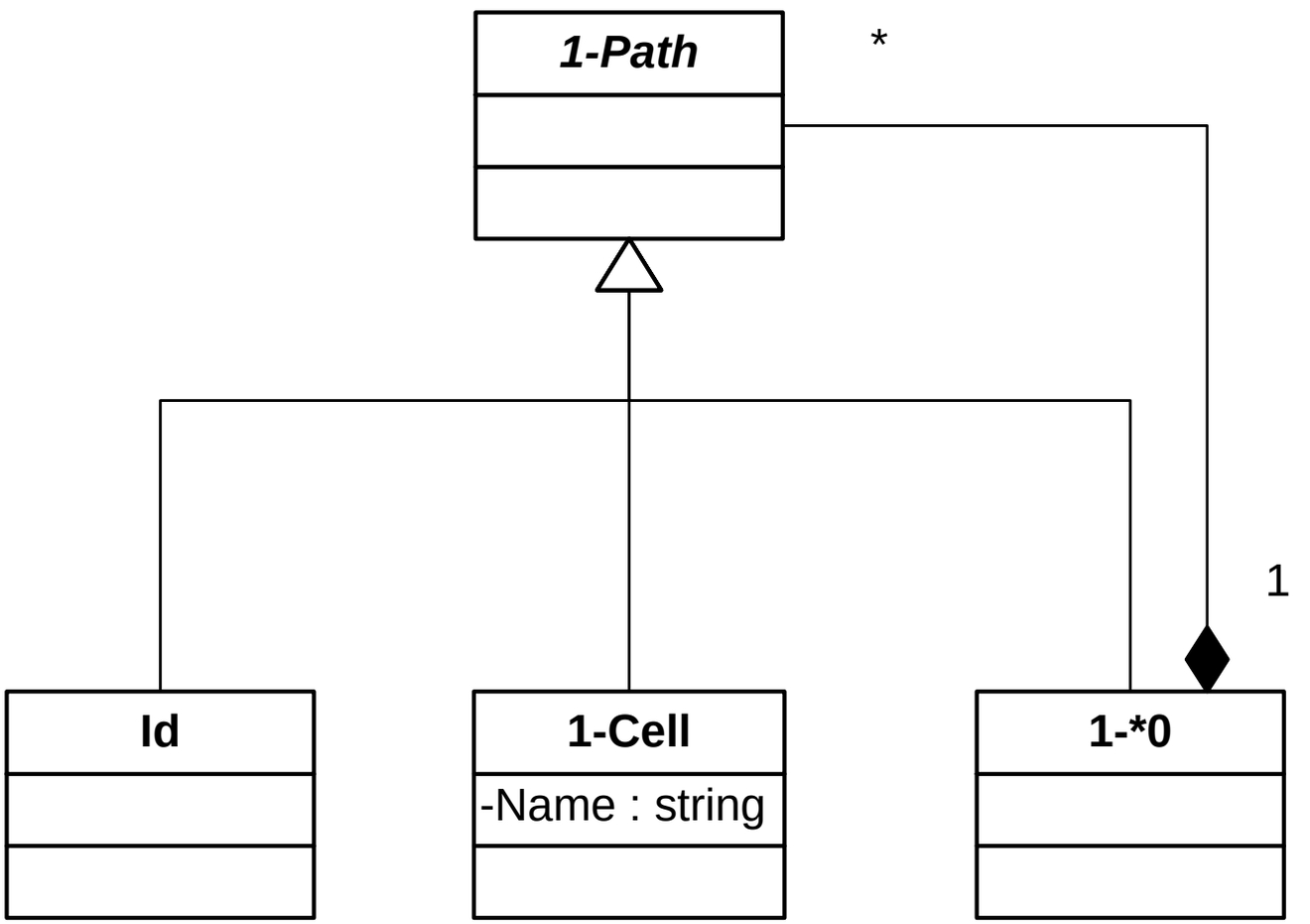
1-Path
*
1
Id
1-Cell
-Name : string
1-*0

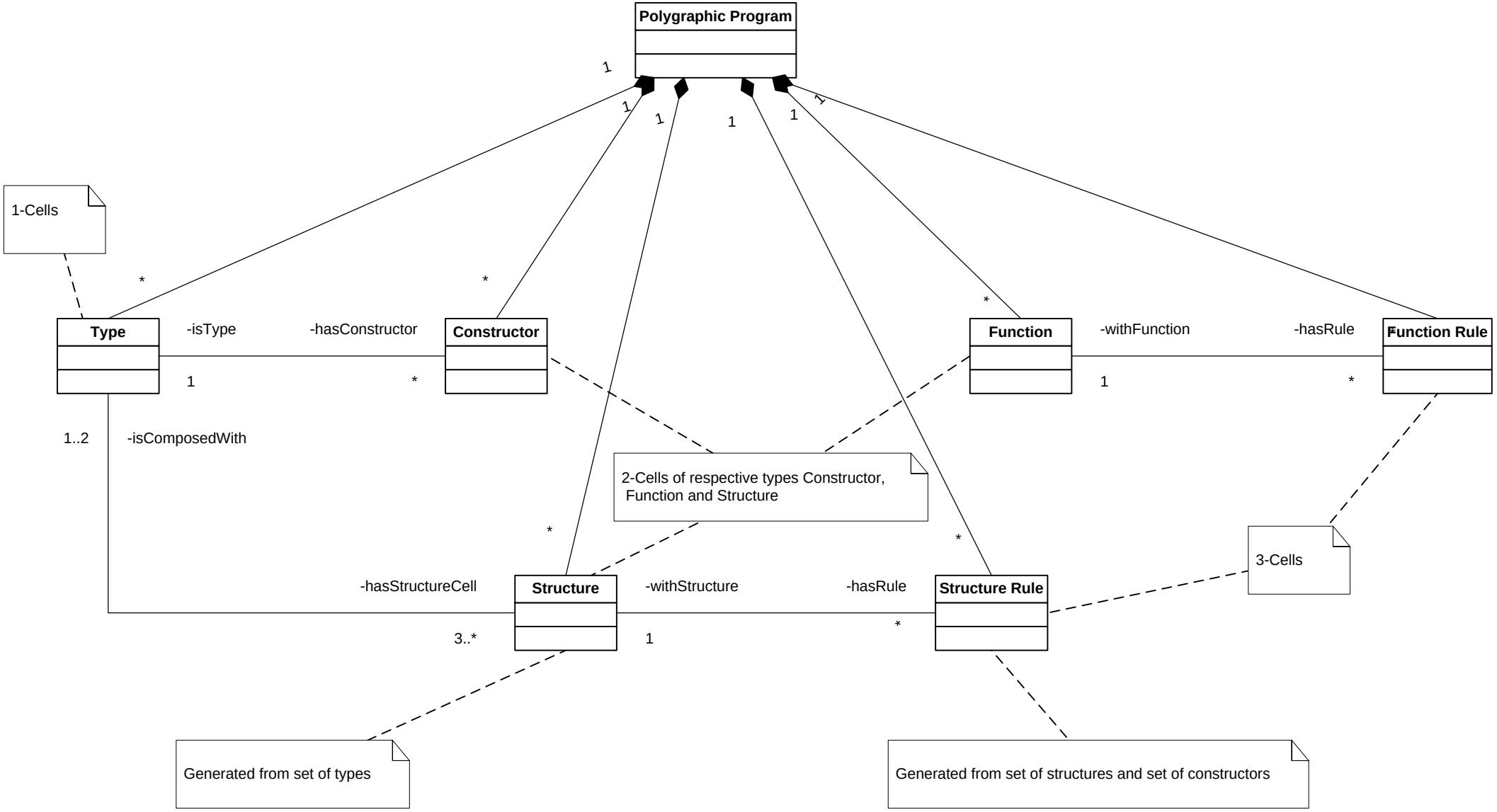
Polygraphic Program
1
1
1
1
1
1
1-Cells
*
*
*
Type
-isType
-hasConstructor
Constructor
Function
-withFunction
-hasRule
Function Rule
1
*
1
*
1..2
-isComposedWith
2-Cells of respective types Constructor,
Function and Structure
*
*
3-Cells
-hasStructureCell
Structure
-withStructure
-hasRule
Structure Rule
3..*
1
*
Generated from set of types
Generated from set of structures and set of constructors

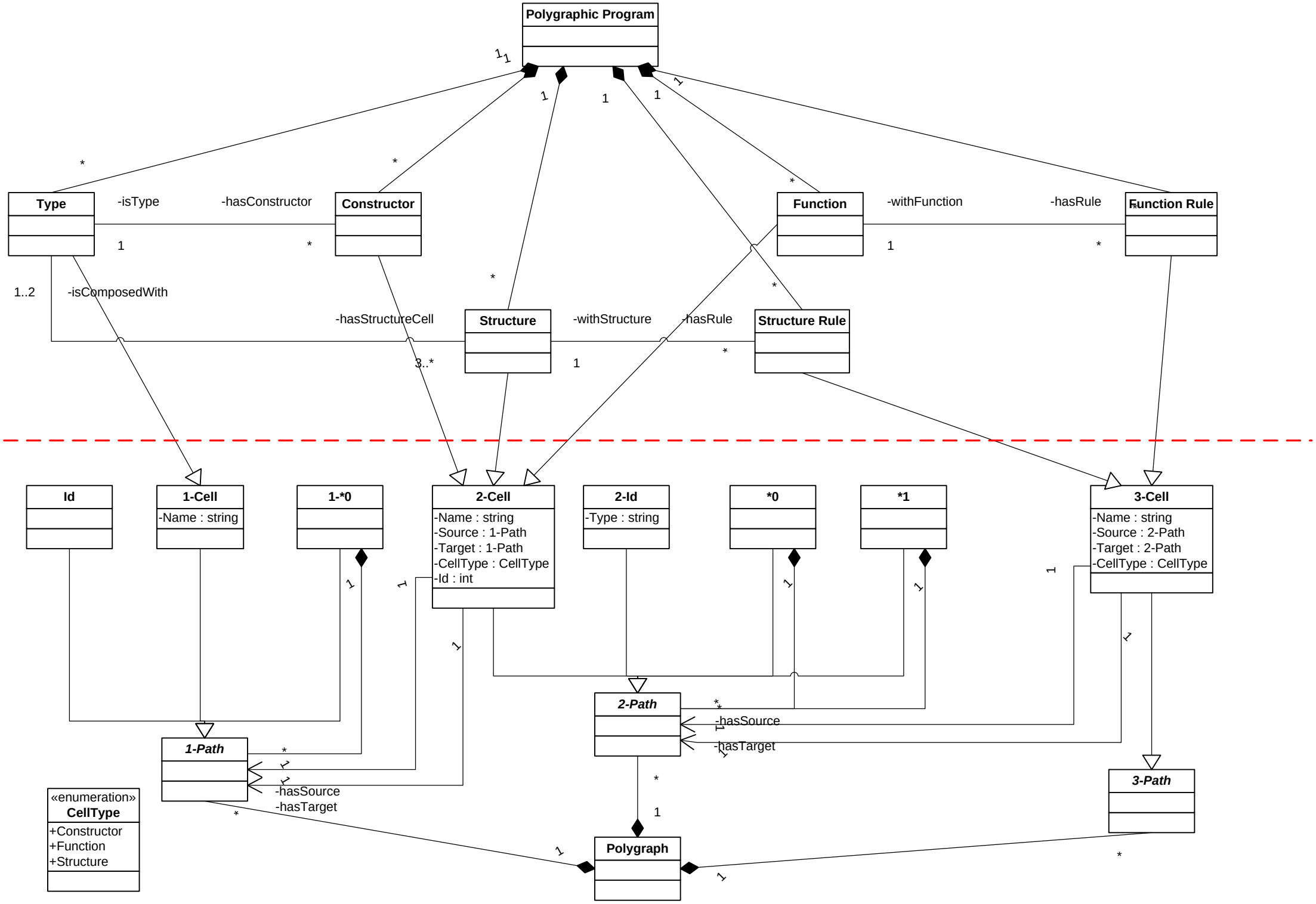
Polygraphic Program
Type
-isType
-hasConstructor
Constructor
Function
-withFunction
-hasRule
Function Rule
1..2
-isComposedWith
-hasStructureCell
Structure
-withStructure
-hasRule
Structure Rule
3..*
Id
1-Cell
-Name : string
1-*0
2-Cell
-Name : string
-Source : 1-Path
-Target : 1-Path
-CellType : CellType
-Id : int
2-Id
-Type : string
*0
*1
3-Cell
-Name : string
-Source : 2-Path
-Target : 2-Path
-CellType : CellType
2-Path
-hasSource
-hasTarget
1-Path
-hasSource
-hasTarget
3-Path
«enumeration»
CellType
+Constructor
+Function
+Structure
Polygraph