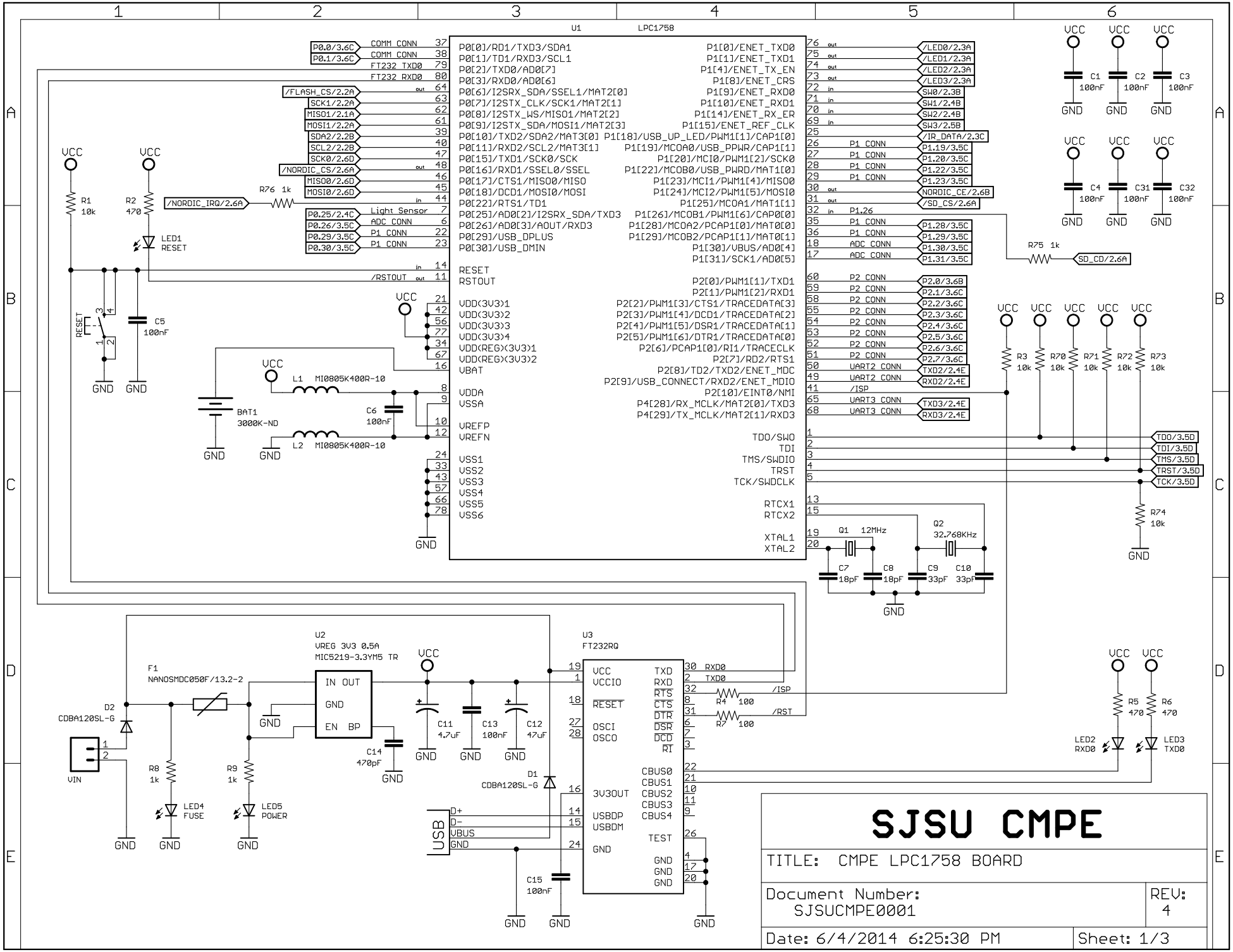
U1 LPC1758
P0[0]/RD1/TXD3/SDA1
P0[1]/TD1/RXD3/SCL1
P0[2]/TXD0/AD0[7]
P0[3]/RXD0/AD0[6]
P0[6]/I2SRX_SDA/SSEL1/MAT2[0]
P0[7]/I2STX_CLK/SCK1/MAT2[1]
P0[8]/I2STX_WS/MISO1/MAT2[2]
P0[9]/I2STX_SDA/MOSI1/MAT2[3]
P0[10]/TXD2/SDA2/MAT3[0]
P0[11]/RXD2/SCL2/MAT3[1]
P0[15]/TXD1/SCK0/SCK
P0[16]/RXD1/SSEL0/SSEL
P0[17]/CTS1/MISO0/MISO
P0[18]/DCD1/MOSI0/MOSI
P0[22]/RTS1/TD1
P0[25]/AD0[2]/I2SRX_SDA/TXD3
P0[26]/AD0[3]/AOUT/RXD3
P0[29]/USB_DPLUS
P0[30]/USB_DMIN
RESET
RSTOUT
VDD(3V3)1
VDD(3V3)2
VDD(3V3)3
VDD(3V3)4
VDD(REG)(3V3)1
VDD(REG)(3V3)2
VBAT
VDDA
VSSA
VREFP
VREFN
VSS1
VSS2
VSS3
VSS4
VSS5
VSS6
P1[0]/ENET_TXD0
P1[1]/ENET_TXD1
P1[4]/ENET_TX_EN
P1[8]/ENET_CRS
P1[9]/ENET_RXD0
P1[10]/ENET_RXD1
P1[14]/ENET_RX_ER
P1[15]/ENET_REF_CLK
P1[18]/USB_UP_LED/PWM1[1]/CAP1[0]
P1[19]/MCOA0/USB_PPWR/CAP1[1]
P1[20]/MCI0/PWM1[2]/SCK0
P1[22]/MCOB0/USB_PWRD/MAT1[0]
P1[23]/MCI1/PWM1[4]/MISO0
P1[24]/MCI2/PWM1[5]/MOSI0
P1[25]/MCOA1/MAT1[1]
P1[26]/MCOB1/PWM1[6]/CAP0[0]
P1[28]/MCOA2/PCAP1[0]/MAT0[0]
P1[29]/MCOB2/PCAP1[1]/MAT0[1]
P1[30]/VBUS/AD0[4]
P1[31]/SCK1/AD0[5]
P2[0]/PWM1[1]/TXD1
P2[1]/PWM1[2]/RXD1
P2[2]/PWM1[3]/CTS1/TRACEDATA[3]
P2[3]/PWM1[4]/DCD1/TRACEDATA[2]
P2[4]/PWM1[5]/DSR1/TRACEDATA[1]
P2[5]/PWM1[6]/DTR1/TRACEDATA[0]
P2[6]/PCAP1[0]/RI1/TRACECLK
P2[7]/RD2/RTS1
P2[8]/TD2/TXD2/ENET_MDC
P2[9]/USB_CONNECT/RXD2/ENET_MDIO
P2[10]/EINT0/NMI
P4[28]/RX_MCLK/MAT2[0]/TXD3
P4[29]/TX_MCLK/MAT2[1]/RXD3
TDO/SWO
TDI
TMS/SWDIO
TRST
TCK/SWDCLK
RTCX1
RTCX2
XTAL1
XTAL2
COMM CONN
FT232 TXD0
FT232 RXD0
/FLASH_CS/2.2A
SCK1/2.2A
MISO1/2.1A
MOSI1/2.2A
SDA2/2.2B
SCL2/2.2B
SCK0/2.6D
/NORDIC_CS/2.6A
MISO0/2.6D
MOSI0/2.6D
/NORDIC_IRQ/2.6A
R76 1k
Light Sensor
ADC CONN
P1 CONN
/RSTOUT
/LED0/2.3A
/LED1/2.3A
/LED2/2.3A
/LED3/2.3A
SW0/2.3B
SW1/2.4B
SW2/2.4B
SW3/2.5B
/IR_DATA/2.3C
P1.19/3.5C
P1.20/3.5C
P1.22/3.5C
P1.23/3.5C
NORDIC_CE/2.6B
/SD_CS/2.6A
P1.26
P1.28/3.5C
P1.29/3.5C
P1.30/3.5C
P1.31/3.5C
R75 1k
SD_CD/2.6A
P2 CONN
P2.0/3.6B
P2.1/3.6C
P2.2/3.6C
P2.3/3.6C
P2.4/3.6C
P2.5/3.6C
P2.6/3.6C
P2.7/3.6C
UART2 CONN
TXD2/2.4E
RXD2/2.4E
/ISP
UART3 CONN
TXD3/2.4E
RXD3/2.4E
TDO/3.5D
TDI/3.5D
TMS/3.5D
TRST/3.5D
TCK/3.5D
R74 10k
Q1 12MHz
Q2 32.768KHz
C7 18pF
C8 18pF
C9 33pF
C10 33pF
C1 100nF
C2 100nF
C3 100nF
C4 100nF
C31 100nF
C32 100nF
R1 10k
R2 470
LED1 RESET
C5 100nF
L1 MI0805K400R-10
L2 MI0805K400R-10
C6 100nF
BAT1 3000K-ND
R3 10k
R70 10k
R71 10k
R72 10k
R73 10k
U2 VREG 3V3 0.5A MIC5219-3.3YM5 TR
IN OUT
GND
EN BP
F1 NANOSMDC050F/13.2-2
D2 CDBA120SL-G
VIN
R8 1k
R9 1k
LED4 FUSE
LED5 POWER
C11 4.7uF
C13 100nF
C12 47uF
C14 470pF
U3 FT232RQ
VCC
VCCIO
RESET
OSCI
OSCO
3V3OUT
USBDP
USBDM
GND
TXD
RXD
RTS
CTS
DTR
DSR
DCD
RI
CBUS0
CBUS1
CBUS2
CBUS3
CBUS4
TEST
R4 100
R7 100
/ISP
/RST
D1 CDBA120SL-G
USB
D+
D-
VBUS
C15 100nF
R5 470
R6 470
LED2 RXD0
LED3 TXD0
SJSU CMPE
TITLE: CMPE LPC1758 BOARD
Document Number: SJSUCMPE0001
REV: 4
Date: 6/4/2014 6:25:30 PM
Sheet: 1/3

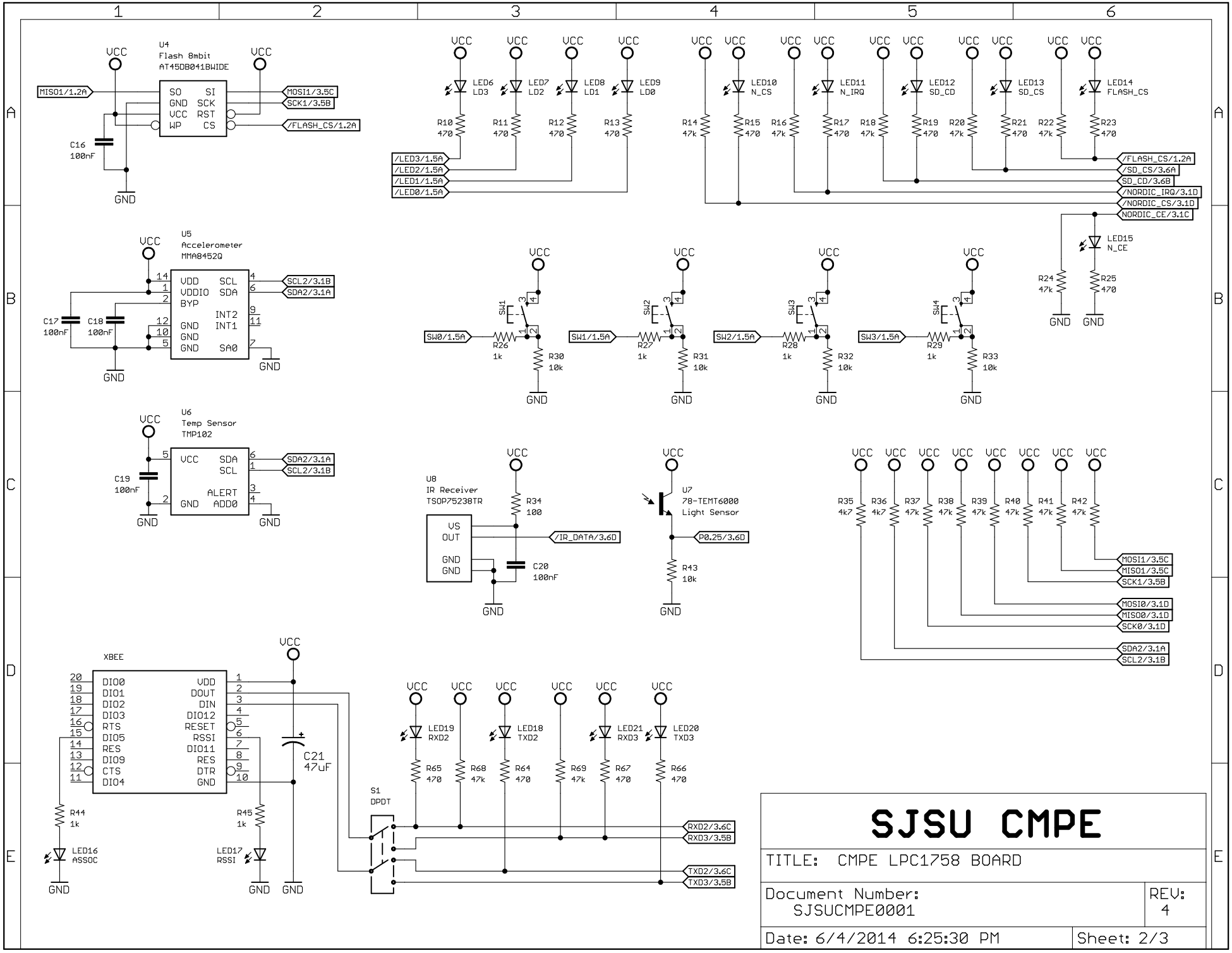

SJSU CMPE

TITLE: CMPE LPC1758 BOARD

Document Number: SJSUCMPE0001

REV: 4

Date: 6/4/2014 6:25:30 PM

Sheet: 2/3

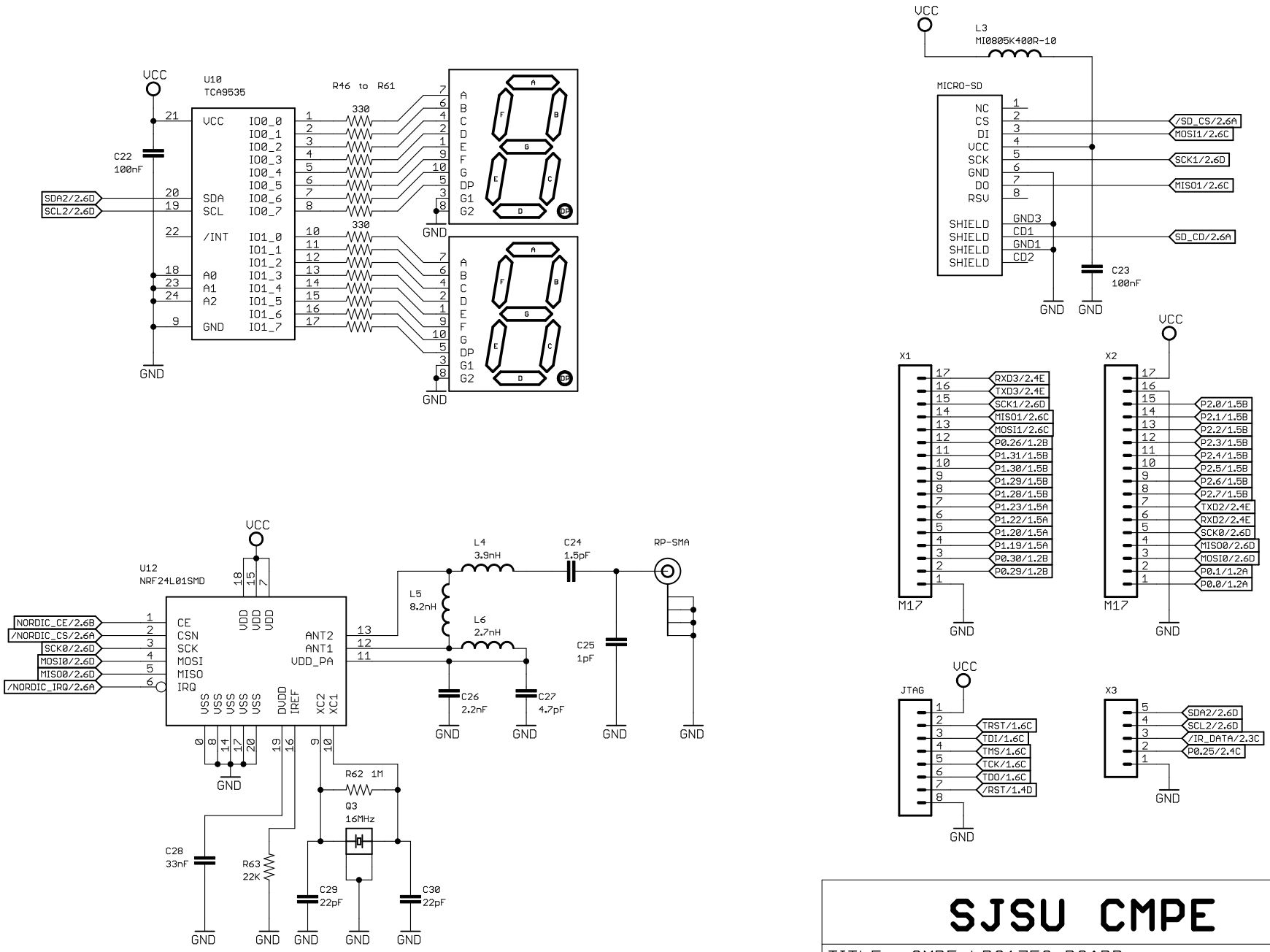

SJSU CMPE

TITLE: CMPE LPC1758 BOARD

Document Number: SJSUCMPE0001

REV: 4

Date: 6/4/2014 6:25:30 PM

Sheet: 3/3