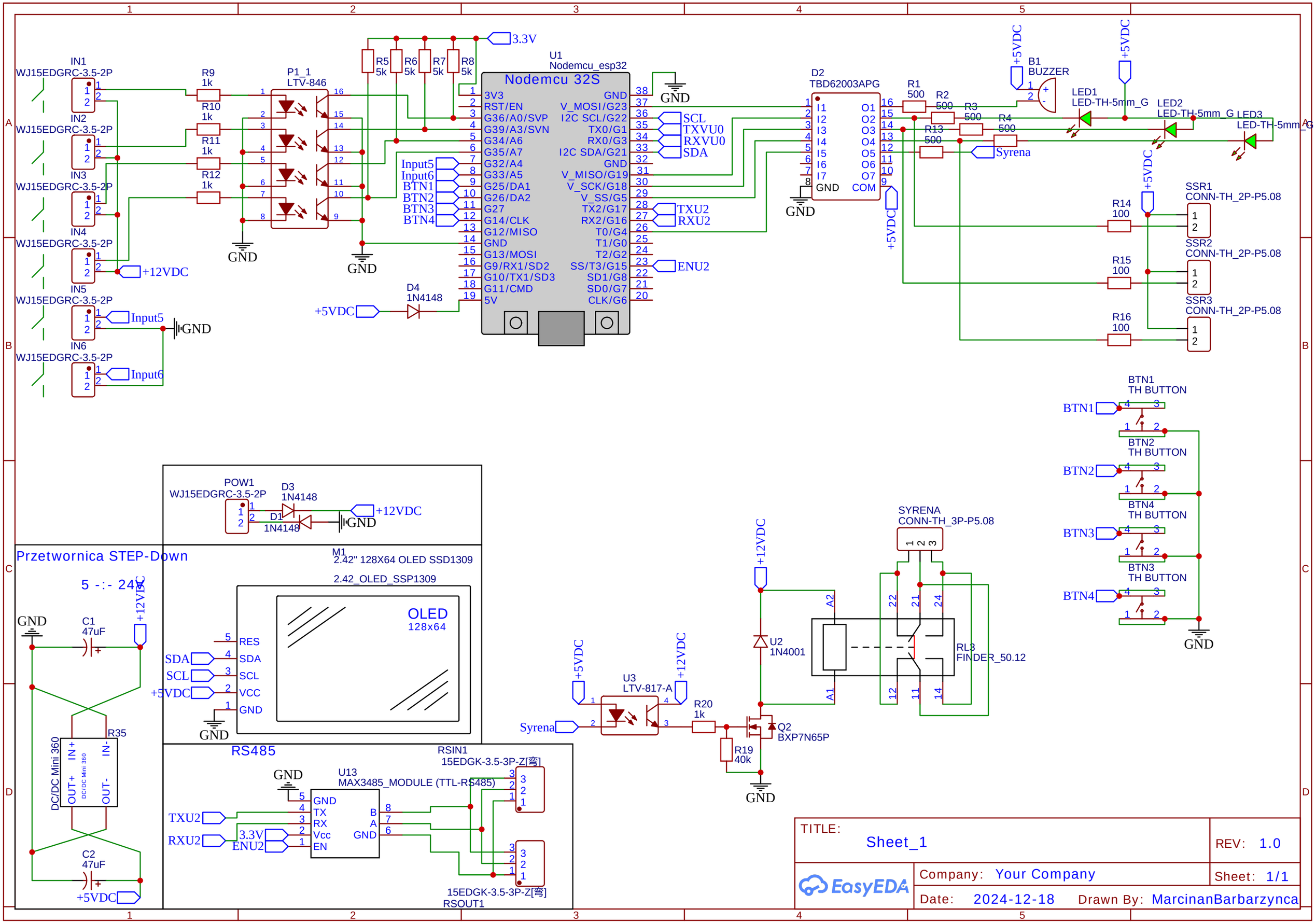
IN1
WJ15EDGRC-3.5-2P
IN2
WJ15EDGRC-3.5-2P
IN3
WJ15EDGRC-3.5-2P
IN4
WJ15EDGRC-3.5-2P
IN5
WJ15EDGRC-3.5-2P
IN6
WJ15EDGRC-3.5-2P
R9 1k
R10 1k
R11 1k
R12 1k
P1_1
LTV-846
R5 5k
R6 5k
R7 5k
R8 5k
3.3V
U1
Nodemcu_esp32
Nodemcu 32S
3V3
RST/EN
G36/A0/SVP
G39/A3/SVN
G34/A6
G35/A7
G32/A4
G33/A5
G25/DA1
G26/DA2
G27
G14/CLK
G12/MISO
GND
G13/MOSI
G9/RX1/SD2
G10/TX1/SD3
G11/CMD
5V
GND
V_MOSI/G23
I2C SCL/G22
TX0/G1
RX0/G3
I2C SDA/G21
GND
V_MISO/G19
V_SCK/G18
V_SS/G5
TX2/G17
RX2/G16
T0/G4
T1/G0
T2/G2
SS/T3/G15
SD1/G8
SD0/G7
CLK/G6
SCL
TXVU0
RXVU0
SDA
TXU2
RXU2
ENU2
Input5
Input6
BTN1
BTN2
BTN3
BTN4
+12VDC
GND
+5VDC
D4
1N4148
D2
TBD62003APG
I1
I2
I3
I4
I5
I6
I7
GND
O1
O2
O3
O4
O5
O6
O7
COM
R1 500
R2 500
R3 500
R4 500
R13 500
Syrena
B1
BUZZER
LED1
LED-TH-5mm_G
LED2
LED-TH-5mm_G
LED3
LED-TH-5mm_G
R14 100
R15 100
R16 100
SSR1
CONN-TH_2P-P5.08
SSR2
CONN-TH_2P-P5.08
SSR3
CONN-TH_2P-P5.08
BTN1
TH BUTTON
BTN2
TH BUTTON
BTN4
TH BUTTON
BTN3
TH BUTTON
POW1
WJ15EDGRC-3.5-2P
D3
1N4148
D1
1N4148
Przetwornica STEP-Down
5 -:- 24
C1
47uF
C2
47uF
R35
DC/DC Mini 360
IN+
IN-
OUT+
OUT-
M1
2.42" 128X64 OLED SSD1309
2.42_OLED_SSP1309
OLED
128x64
RES
SDA
SCL
VCC
GND
RS485
U13
MAX3485_MODULE (TTL-RS485)
TX
RX
Vcc
EN
B
A
RSIN1
15EDGK-3.5-3P-Z[弯]
RSOUT1
U3
LTV-817-A
R20 1k
R19 40k
Q2
BXP7N65P
U2
1N4001
SYRENA
CONN-TH_3P-P5.08
RL3
FINDER_50.12
A1
A2
TITLE:
Sheet_1
REV: 1.0
Company: Your Company
Sheet: 1/1
Date: 2024-12-18
Drawn By: MarcinanBarbarzynca
EasyEDA