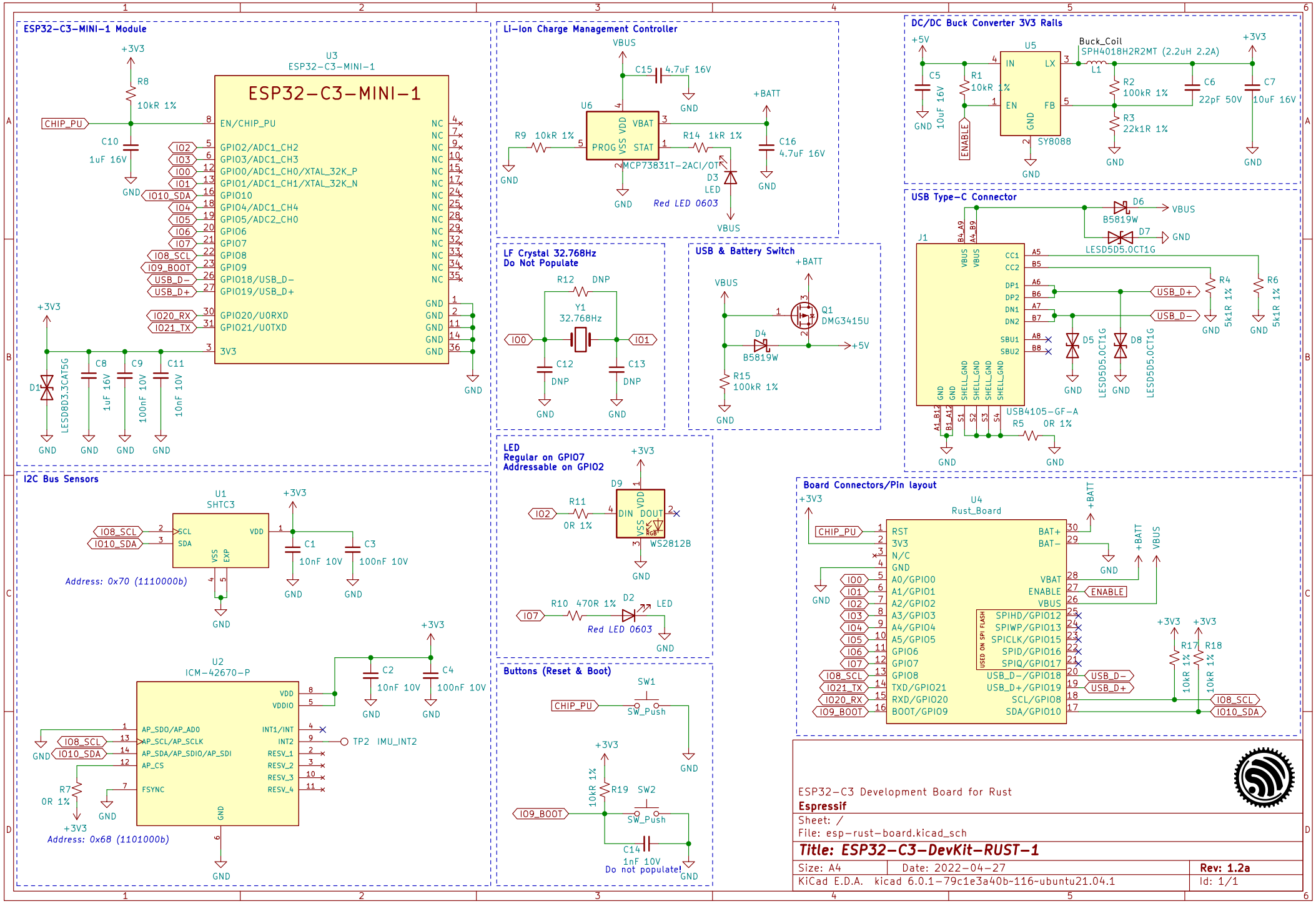
ESP32-C3-MINI-1 Module
U3
ESP32-C3-MINI-1
ESP32-C3-MINI-1
EN/CHIP_PU
GPIO2/ADC1_CH2
GPIO3/ADC1_CH3
GPIO0/ADC1_CH0/XTAL_32K_P
GPIO1/ADC1_CH1/XTAL_32K_N
GPIO10
GPIO4/ADC1_CH4
GPIO5/ADC2_CH0
GPIO6
GPIO7
GPIO8
GPIO9
GPIO18/USB_D-
GPIO19/USB_D+
GPIO20/U0RXD
GPIO21/U0TXD
3V3
CHIP_PU
IO2
IO3
IO0
IO1
IO10_SDA
IO4
IO5
IO6
IO7
IO8_SCL
IO9_BOOT
USB_D-
USB_D+
IO20_RX
IO21_TX
+3V3
R8
10kR 1%
C10
1uF 16V
GND
D1
LESD8D3.3CAT5G
C8
1uF 16V
C9
100nF 10V
C11
10nF 10V
Li-Ion Charge Management Controller
VBUS
C15
4.7uF 16V
U6
MCP73831T-2ACI/OT
VDD
VSS
VBAT
PROG
STAT
R9
10kR 1%
R14
1kR 1%
+BATT
C16
4.7uF 16V
D3
LED
Red LED 0603
LF Crystal 32.768Hz
Do Not Populate
R12
DNP
Y1
32.768Hz
C12
DNP
C13
DNP
USB & Battery Switch
Q1
DMG3415U
D4
B5819W
+5V
R15
100kR 1%
DC/DC Buck Converter 3V3 Rails
U5
SY8088
IN
LX
EN
FB
Buck_Coil
SPH4018H2R2MT (2.2uH 2.2A)
L1
C5
10uF 16V
R1
10kR 1%
ENABLE
R2
100kR 1%
R3
22k1R 1%
C6
22pF 50V
C7
10uF 16V
USB Type-C Connector
J1
USB4105-GF-A
CC1
CC2
DP1
DP2
DN1
DN2
SBU1
SBU2
SHELL_GND
D6
B5819W
D7
LESD5D5.0CT1G
D5
LESD5D5.0CT1G
D8
LESD5D5.0CT1G
R4
5k1R 1%
R6
5k1R 1%
R5
0R 1%
I2C Bus Sensors
U1
SHTC3
SCL
SDA
VDD
VSS
EXP
Address: 0x70 (1110000b)
C1
10nF 10V
C3
100nF 10V
U2
ICM-42670-P
AP_SDO/AP_AD0
AP_SCL/AP_SCLK
AP_SDA/AP_SDIO/AP_SDI
AP_CS
FSYNC
VDD
VDDIO
INT1/INT
INT2
RESV_1
RESV_2
RESV_3
RESV_4
TP2
IMU_INT2
C2
10nF 10V
C4
100nF 10V
R7
0R 1%
Address: 0x68 (1101000b)
LED
Regular on GPIO7
Addressable on GPIO2
D9
WS2812B
DIN
DOUT
R11
0R 1%
R10
470R 1%
D2
LED
Red LED 0603
Buttons (Reset & Boot)
SW1
SW_Push
SW2
R19
10kR 1%
C14
1nF 10V
Do not populate!
Board Connectors/Pin layout
U4
Rust_Board
RST
3V3
N/C
GND
A0/GPIO0
A1/GPIO1
A2/GPIO2
A3/GPIO3
A4/GPIO4
A5/GPIO5
GPIO6
GPIO7
GPIO8
TXD/GPIO21
RXD/GPIO20
BOOT/GPIO9
BAT+
BAT-
VBAT
ENABLE
VBUS
SPIHD/GPIO12
SPIWP/GPIO13
SPICLK/GPIO15
SPID/GPIO16
SPIQ/GPIO17
USB_D-/GPIO18
USB_D+/GPIO19
SCL/GPIO8
SDA/GPIO10
USED ON SPI FLASH
R17
10kR 1%
R18
10kR 1%
ESP32-C3 Development Board for Rust
Espressif
Sheet: /
File: esp-rust-board.kicad_sch
Title: ESP32-C3-DevKit-RUST-1
Size: A4
Date: 2022-04-27
Rev: 1.2a
KiCad E.D.A. kicad 6.0.1-79c1e3a40b~116~ubuntu21.04.1
Id: 1/1