REVISION HISTORY			
REV	DESCRIPTION	DATE	APPROVED

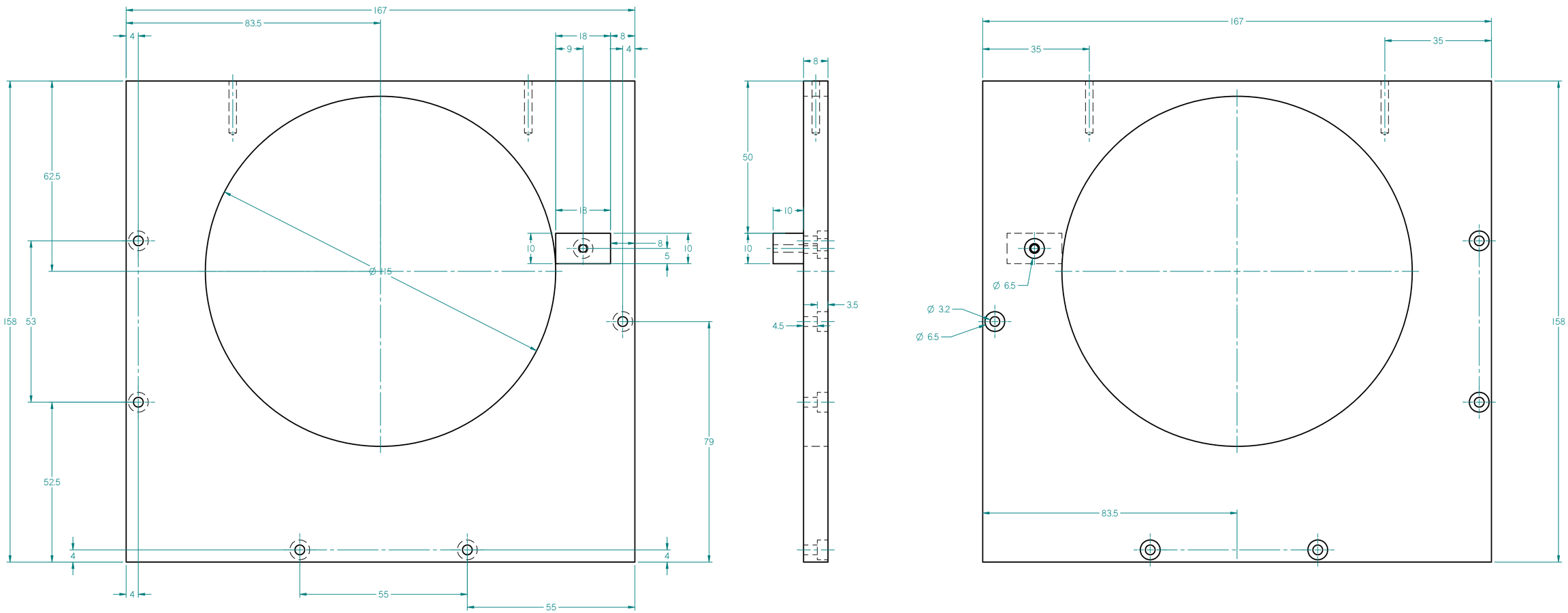

SOLID EDGE ACADEMIC COPY

	NAME	DATE
DRAWN	ma05498	02/17/21
CHECKED		
ENG APPR		
MGR APPR		

UNLESS OTHERWISE SPECIFIED
DIMENSIONS ARE IN MILLIMETERS
ANGLES ±X.X°
2 PL ±X.XX 3 PL ±X.XXX

Solid Edge

TITLE
Caixa para JIGA PoE

SIZE D | DWG NO | REV

FILE NAME: Draw_Faces.dft

SCALE: | WEIGHT: | SHEET 5 OF 7