Carrier

# Variable Frequency Drive (VFD) Factory-Installed Option 2-Speed Motor Control for 2-Stage Cooling Rooftop Units

# Installation, Start-Up and Service Instructions

**This document provides supplemental installation, setup and troubleshooting information for the Variable Frequency Drive (VFD) factory-installed option. It is to be used with the base unit Installation Instructions for 48/50TC, 50TCQ, 48/50HC, 50HCQ, and 40RU 2-Stage cooling units, sizes 07-30. Units equipped with the VFD are identified by an indicator in the unit's model number (see the unit's nameplate). Use Table 1 to identify whether a given unit is equipped with the factory-installed VFD option.**

NOTE: Read the entire instruction manual before starting the installation.

## CONTENTS


Page

SAFETY CONSIDERATIONS . . . . . 1
GENERAL . . . . . 2
Staged Air Volume (SAV™) Indoor Fan Speed System . . . . . 2
Identifying Factory Option . . . . . 2
Unit Installation with SAV Option . . . . . 3
Pre-Start Check, SAV™ Option . . . . . 5
START-UP, SAV™ OPTION . . . . . 16
Compressor Rotation . . . . . 16
Indoor Fan Motor . . . . . 16
Cooling with SAV . . . . . 16
Operating Sequences, SAV Option . . . . . 16
Cooling (FAN Switch in AUTO) . . . . . 17
Heating . . . . . 17
Operating Fan for Test and Balance . . . . . 17
SERVICE . . . . . 19
SAV™ Option Components . . . . . 19
Fan Speed Relay Board . . . . . 19
Configuration Jumpers . . . . . 19
Variable Frequency Drive . . . . . 19
Central Terminal Board Jumpers (48/50 Series Only) . . . . . 21
VFD Fuses . . . . . 22
Control and Power Wiring Diagrams . . . . . 23
VFD ALARMS AND FAULTS TROUBLESHOOTING 30
Alarms . . . . . 30
Faults . . . . . 30
VFD MAINTENANCE . . . . . 30
Heat Sink Cleaning . . . . . 31
Fan Replacement . . . . . 32
Bypass the VFD . . . . . 34
VFD PARAMETERS . . . . . 35
VFD REMOTE KEYPAD . . . . . 71
ACH550/ACS320 Operation with Remote Keypad . 71
ACH550/ACS320 VFD Modes . . . . . 71
ACH550/ACS320 VFD Diagnostics . . . . . 73
Correcting Faults . . . . . 73
History . . . . . 73
Reset After Using Start-Up Assistant . . . . . 76
ACH580 Operation with Remote Keypad . . . . . 77
ACH580 VFD Modes . . . . . 78
ACH580 VFD Diagnostics . . . . . 80
ALL ACH580 ACH550 AND ACH320 KEYPADS . . . 82
Control Panel Cleaning . . . . . 82
Battery Replacement . . . . . 82
VFD Remote Keypad Parameters . . . . . 83


## SAFETY CONSIDERATIONS

**⚠ CAUTION**

CONFIGURATION OVERRIDE HAZARD

DO NOT USE ABB OR CARRIER START-UP ASSISTANT ON THIS VFD APPLICATION! Use of start-up assistant will override the factory VFD configurations!

Improper installation, adjustment, alteration, service, maintenance, or use can cause explosion, fire, electrical shock or other conditions which may cause personal injury or property damage. Consult a qualified installer, service agency, or your distributor or branch for information or assistance. The qualified installer or agency must use factory-authorized kits or accessories when modifying this product. Refer to the individual instructions packaged with the kits or accessories when installing.

Follow all safety codes. Wear safety glasses and work gloves. Use quenching cloths for brazing operations and have a fire extinguisher available. Read these instructions thoroughly and follow all warnings or cautions attached to the unit. Consult local building codes and appropriate national electrical codes (in USA, ANSI/NFPA70, National Electrical Code (NEC); in Canada, CSA C22.1) for special requirements.

It is important to recognize safety information. This is the safety-alert symbol ⚠. When you see this symbol on the unit and in instructions or manuals, be alert to the potential for personal injury.

Understand the signal words DANGER, WARNING, CAUTION, and NOTE. These words are used with the safety-alert symbol. DANGER identifies the most serious hazards which will result in severe personal injury or death. WARNING signifies hazards which could result in personal injury or death. CAUTION is used to identify unsafe practices, which may result in minor personal injury or product and property damage.

NOTE is used to highlight suggestions which will result in enhanced installation, reliability, or operation.


**Manufacturer reserves the right to discontinue, or change at any time, specifications or designs without notice and without incurring obligations.**

## GENERAL

### Staged Air Volume (SAV™) Indoor Fan Speed System

The Staged Air Volume (SAV) system utilizes a Fan Speed control board and Variable Frequency Drive (VFD) to automatically adjust the indoor fan motor speed in sequence with the unit's ventilation, cooling and heating operation. Per ASHRAE 90.1-2016 and IECC[1]-2015 standards, during the first stage of cooling operation the SAV system will adjust the fan motor to provide 66% of the design airflow rate for the unit. When the call for the second stage of cooling is required, the SAV™ system will allow the design airflow rate for the unit established (100%). During the heating mode, the SAV system will allow total design airflow rate (100%) operation. During ventilation mode, the SAV system will operate the fan motor at 66% of full speed.

Figures 1, 2 and 3 show the VFDs used for the SAV indoor fan speed system.

**Fig. 1 — ACH550 Variable Frequency Drive (VFD)**

### Identifying Factory Option

This supplement only applies to units that meet the criteria detailed in Table 1. If the unit does not meet that criteria, discard this document.

NOTE: See Fig. 4 and 5 for examples of typical Model Number Nomenclature.

NOTE: 48/50LC units are not covered in this document; VFDs are standard equipment on belt drive LC units. VFD instructions for the 48/50LC series are found in the Installation Instructions for the LC base units.

1. Third-party trademarks and logos are the property of their respective owners.

**Fig. 2 — ACS320 Variable Frequency Drive (VFD)**

**Fig. 3 — ACH580 Variable Frequency Drive (VFD)**

**Table 1 — Model Size/VFD Option Indicator**

| MODEL/SIZES | POSITION IN MODEL NUMBER | VFD FIOP INDICATOR |
|---|---|---|
| 48/50TC / 07-30 | 17 | G-M |
| 50TCQ / 07-24 | 17 | G-M |
| 48/50HC / 07-28 | 17 | G-M |
| 50HCQ / 07-12 | 17 | G-M |
| 40RUA / 07-30 | 9 | T |
| 40RUS / 08-30 | 9 | T |
| 40RUQ / 07-25 | 9 | T |

## Unit Installation with SAV Option

48/50HC, 50HCQ, 48/50TC, AND 50TCQ ROOFTOP

Refer to the base unit installation instructions for standard required operating and service clearances.

40RU WITHOUT REMOTE VFD KEYPAD

Additional service clearance is required on the rear for 40RU fan coil unit equipped with the SAV option. Increase the recommended rear panel clearance to 30 inches.

40RU WITH REMOTE VFD KEYPAD

Refer to the base unit installation instructions for standard required operating and service clearances. Install the accessory remote VFD keypad before positioning the 40RU unit in its final operating location.

NOTE: The remote VFD keypad is a field-installed option. It is not included as part of the factory-installed VFD option.

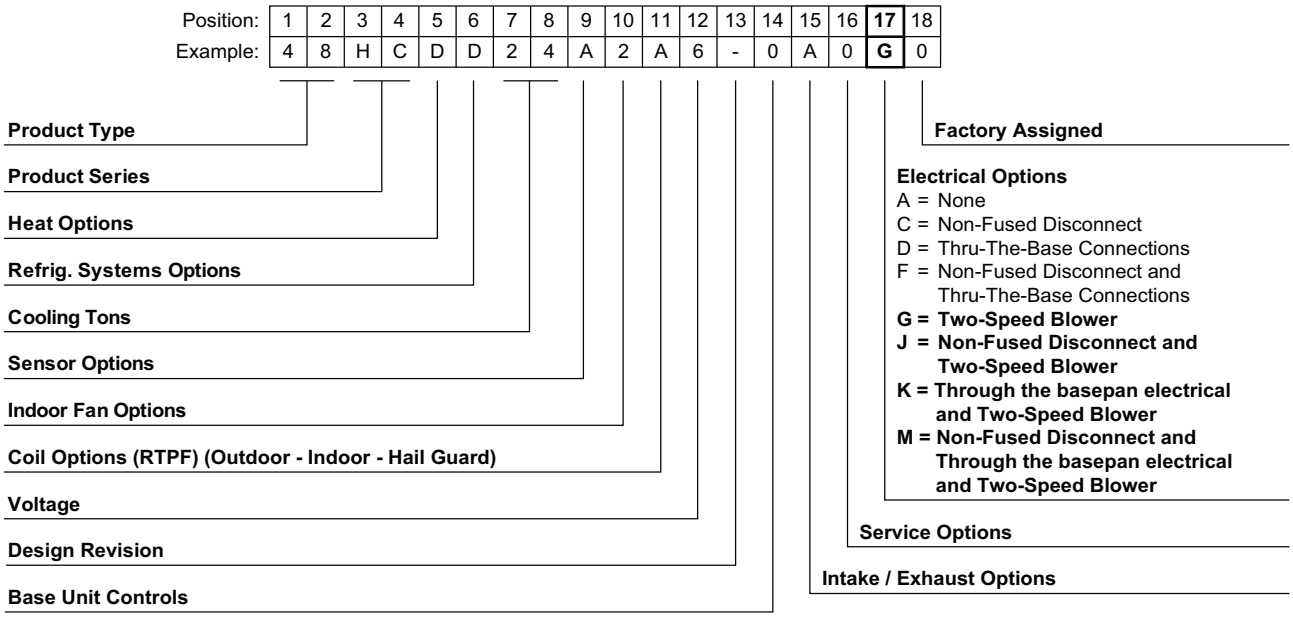


**Fig. 4 — Model Number Nomenclature Example, 48/50-Series**

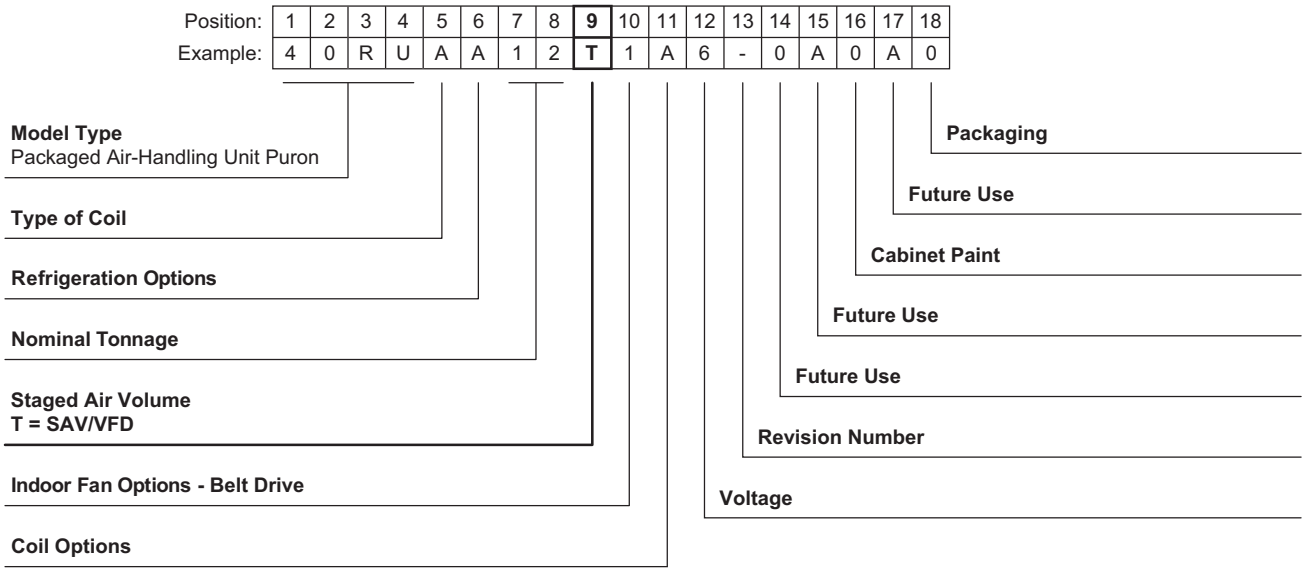


**Fig. 5 — Model Number Nomenclature Example, 40RU-Series**

IMPORTANT: Do NOT change units equipped with the VFD option to operate at less than the preset 66% minimum Hz setting (40 Hz). For example, do not change a unit equipped with a standard static motor to operate at less than 40 Hz (which is 66% of its 60 Hz rating).
Tables 2-10 list the minimum recommended CFM per fan motor type (single speed or 2-speed) for the units covered in this document.

### Table 2 — 48TC Min CFM Per Fan Motor Type

| MODEL-SIZE | SINGLE SPEED FAN MOTOR | 2-SPEED FAN MOTOR (AT HIGH SPEED) | 2-SPEED FAN MOTOR (AT LOW SPEED) |
|---|---|---|---|
| **48TC 07** | 1800 | 1800 | 1188 |
| **48TC 08** | 2250 | 2250 | 1485 |
| **48TC 09** | 2550 | 2873 | 1896 |
| **48TC 12** | 3000 | 3380 | 2231 |
| **48TC 14** | 3600 | 4225 | 2789 |
| **48TC 16** | 4500 | 5625 | 3713 |
| **48TC 17** | 4500 | 4500 | 2970 |
| **48TC 20** | 5250 | 5250 | 3465 |
| **48TC 24** | 6000 | 6000 | 3960 |
| **48TC 28** | 7500 | 8450 | 5577 |
| **48TC 30** | 8250 | 8250 | 5445 |

### Table 3 — 50TC Min CFM Per Fan Motor Type

| MODEL-SIZE | SINGLE SPEED FAN MOTOR | 2-SPEED FAN MOTOR (AT HIGH SPEED) | SPEED FAN MOTOR (AT LOW SPEED) |
|---|---|---|---|
| **50TC 07** | 1800 | 1800 | 1188 |
| **50TC 08** | 2250 | 2250 | 1485 |
| **50TC 09** | 2550 | 2873 | 1896 |
| **50TC 12** | 3000 | 3380 | 2231 |
| **50TC 14** | 3600 | 4225 | 2789 |
| **50TC 16** | 4500 | 5625 | 3713 |
| **50TC 17** | 4500 | 4500 | 2970 |
| **50TC 20** | 5250 | 5250 | 3465 |
| **50TC 24** | 6000 | 6000 | 3960 |
| **50TC 28** | 7500 | 8450 | 5577 |
| **50TC 30** | 8250 | 8250 | 5445 |

### Table 4 — 50TCQ Min CFM Per Fan Motor Type

| MODEL-SIZE | SINGLE SPEED FAN MOTOR | 2-SPEED FAN MOTOR (AT HIGH SPEED) | 2-SPEED FAN MOTOR (AT LOW SPEED) |
|---|---|---|---|
| **50TCQ 07** | 1800 | 1800 | 1188 |
| **50TCQ 08** | 2250 | 2535 | 1673 |
| **50TCQ 09** | 2550 | 2873 | 1896 |
| **50TCQ 12** | 3000 | 3000 | 1980 |
| **50TCQ 14** | 3750 | 4225 | 2789 |
| **50TCQ 17** | 4500 | 5070 | 3346 |
| **50TCQ 24** | 6000 | 6760 | 4462 |

### Table 5 — 48HC Min CFM Per Fan Motor Type

| MODEL-SIZE | SINGLE SPEED FAN MOTOR | 2-SPEED FAN MOTOR (AT HIGH SPEED) | 2-SPEED FAN MOTOR (AT LOW SPEED) |
|---|---|---|---|
| **48HC 07** | 1800 | 1800 | 1300 |
| **48HC 08** | 2250 | 2535 | 1673 |
| **48HC 09** | 2550 | 2550 | 1683 |
| **48HC 11** | 3000 | 3380 | 2231 |
| **48HC 12** | 3000 | 3380 | 2231 |
| **48HC 14** | 3750 | 4225 | 2789 |
| **48HC 17** | 4500 | 5070 | 3346 |
| **48HC 20** | 5250 | 5915 | 3904 |
| **48HC 24** | 6000 | 7500 | 4950 |
| **48HC 28** | 7500 | 8450 | 5577 |

### Table 6 — 50HC Min CFM Per Fan Motor Type

| MODEL-SIZE | SINGLE SPEED FAN MOTOR | 2-SPEED FAN MOTOR (AT HIGH SPEED) | 2-SPEED FAN MOTOR (AT LOW SPEED) |
|---|---|---|---|
| **50HC 07** | 1800 | 1800 | 1200 |
| **50HC 08** | 2250 | 2535 | 1673 |
| **50HC 09** | 2550 | 2550 | 1683 |
| **50HC 11** | 3000 | 3380 | 2231 |
| **50HC 12** | 3000 | 3380 | 2231 |
| **50HC 14** | 3750 | 4225 | 2789 |
| **50HC 17** | 4500 | 5070 | 3346 |
| **50HC 20** | 5250 | 5915 | 3904 |
| **50HC 24** | 6000 | 7500 | 4950 |
| **50HC 28** | 7500 | 8450 | 5577 |

### Table 7 — 50HCQ Min CFM Per Fan Motor Type

| MODEL-SIZE | SINGLE SPEED FAN MOTOR | 2-SPEED FAN MOTOR (AT HIGH SPEED) | 2-SPEED FAN MOTOR (AT LOW SPEED) |
|---|---|---|---|
| **50HCQ 07** | 1800 | 1800 | 1188 |
| **50HCQ 08** | 2250 | 2250 | 1485 |
| **50HCQ 09** | 2550 | 2873 | 1896 |
| **50HCQ 12** | 3000 | 3380 | 2231 |

### Table 8 — 40RUA Min CFM Per Fan Motor Type

| MODEL-SIZE | SINGLE SPEED FAN MOTOR | 2-SPEED FAN MOTOR (AT HIGH SPEED) | 2-SPEED FAN MOTOR (AT LOW SPEED) |
|---|---|---|---|
| **40RUA 07** | 1800 | 2030 | 1338 |
| **40RUA 08** | 2250 | 2535 | 1673 |
| **40RUA 12** | 3000 | 3380 | 2231 |
| **40RUA 14** | 3750 | 4225 | 2789 |
| **40RUA 16** | 4500 | 4500 | 2970 |
| **40RUA 25** | 6000 | 6000 | 3960 |
| **40RUA 28** | 7500 | 8450 | 5577 |
| **40RUA 30** | 9000 | 9295 | 6135 |

### Table 9 — 40RUS Min CFM Per Fan Motor Type

| MODEL-SIZE | SINGLE SPEED FAN MOTOR | 2-SPEED FAN MOTOR (AT HIGH SPEED) | 2-SPEED FAN MOTOR (AT LOW SPEED) |
|---|---|---|---|
| **40RUS 08** | 2250 | 2535 | 1673 |
| **40RUS 10** | 2550 | 2873 | 1896 |
| **40RUS 12** | 3000 | 3380 | 2231 |
| **40RUS 14** | 3750 | 4225 | 2789 |
| **40RUS 16** | 4500 | 4500 | 2970 |
| **40RUS 25** | 6000 | 6000 | 3960 |
| **40RUS 28** | 7500 | 8450 | 5577 |
| **40RUS 30** | 9000 | 9295 | 6135 |

### Table 10 — 40RUQ Min CFM Per Fan Motor Type

| MODEL-SIZE | SINGLE SPEED FAN MOTOR | 2-SPEED FAN MOTOR (AT HIGH SPEED) | 2-SPEED FAN MOTOR (AT LOW SPEED) |
|---|---|---|---|
| **40RUQ 07** | 1800 | 2030 | 1338 |
| **40RUQ 08** | 2250 | 2535 | 1673 |
| **40RUQ 12** | 3000 | 3380 | 2231 |
| **40RUQ 16** | 4500 | 4500 | 2970 |
| **40RUQ 25** | 6000 | 6000 | 3960 |

## Pre-Start Check, SAV™ Option

1. Remove the access panel to reach the VFD.

- 48/50 Series: Blower compartment panel
- 40RU: Rear access panel

NOTE: See Fig. 6-23 for VFD location in the units covered by this document.

2. Read all safety, caution and warning labels.
3. Inspect wiring at the VFD for loose or disconnected wires at the terminal strip and for wires in contact with sharp edges and moving parts (pulley, belt).

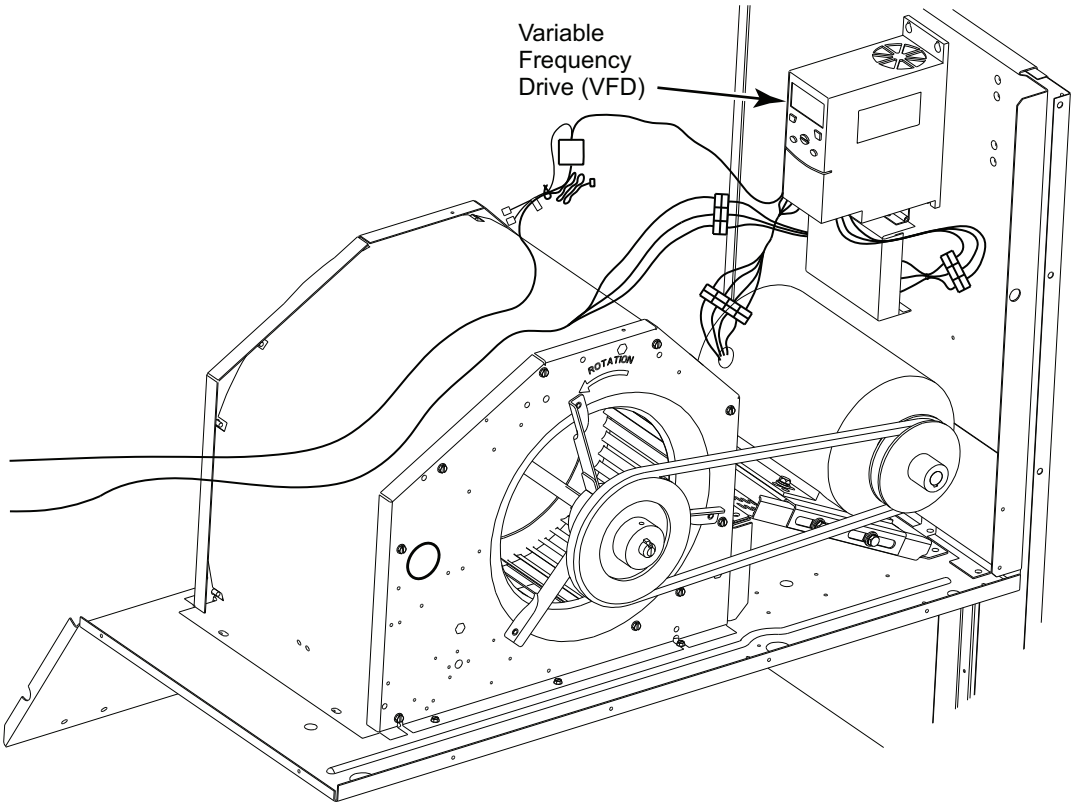


**Fig. 6 — ACS320 VFD Location for the following units: 48/50TC 07 and 50TCQ 07 (208/230V and 460V units only)**

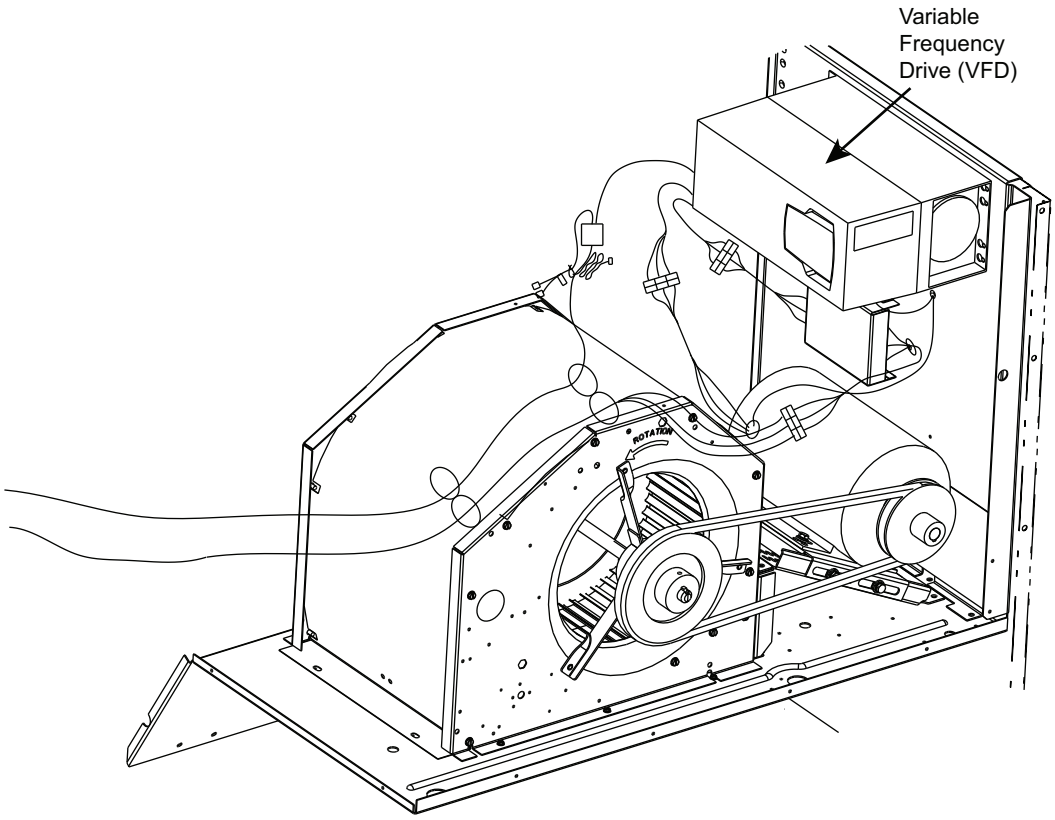


**Fig. 7 — ACH550/580 VFD Location for the following units: 48/50TC 07 (575V units only)**

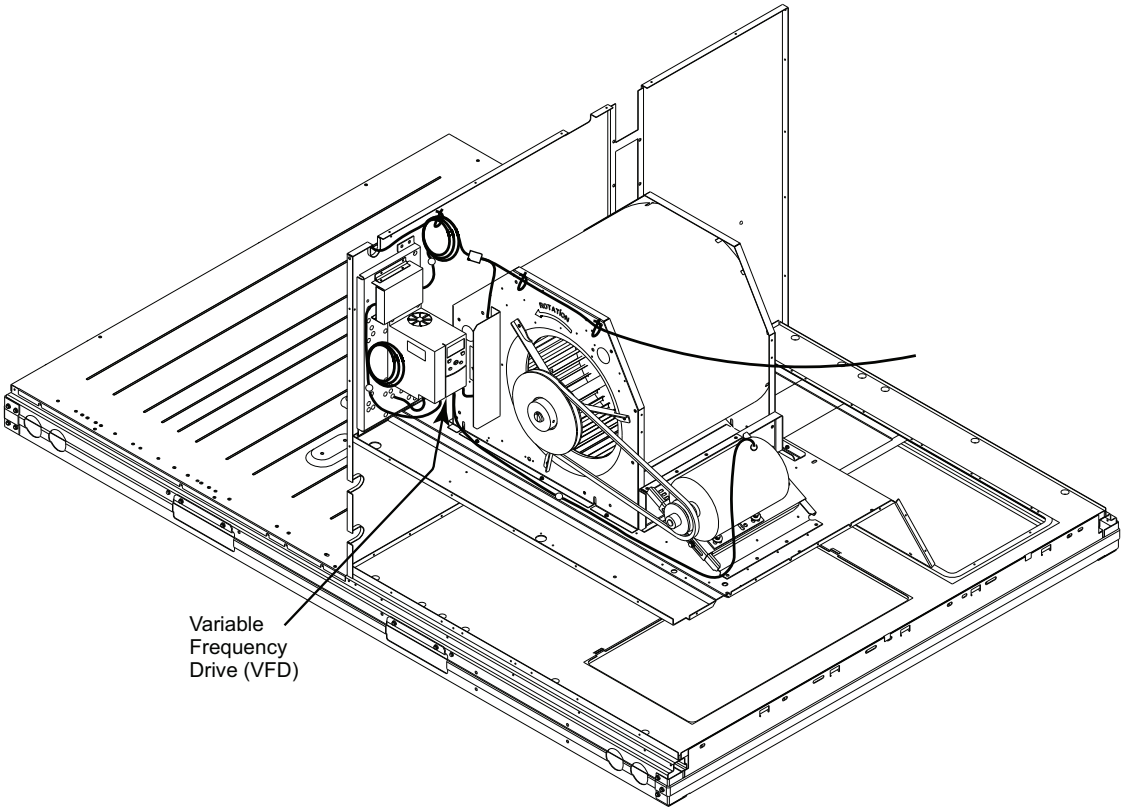


**Fig. 8 — ACS320 VFD Location for the following units: 48/50TC 08 (208/230V and 460V units only)**

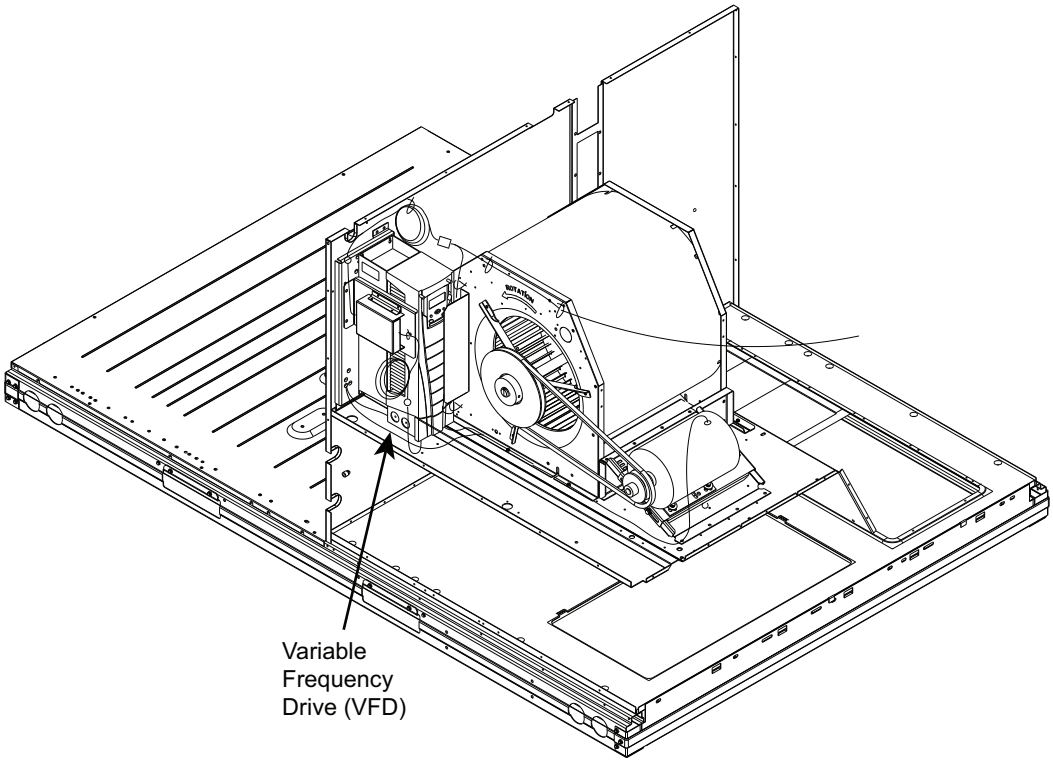


**Fig. 9 — ACH550/580 VFD Location for the following units: 48/50TC 08 (575V units only)**

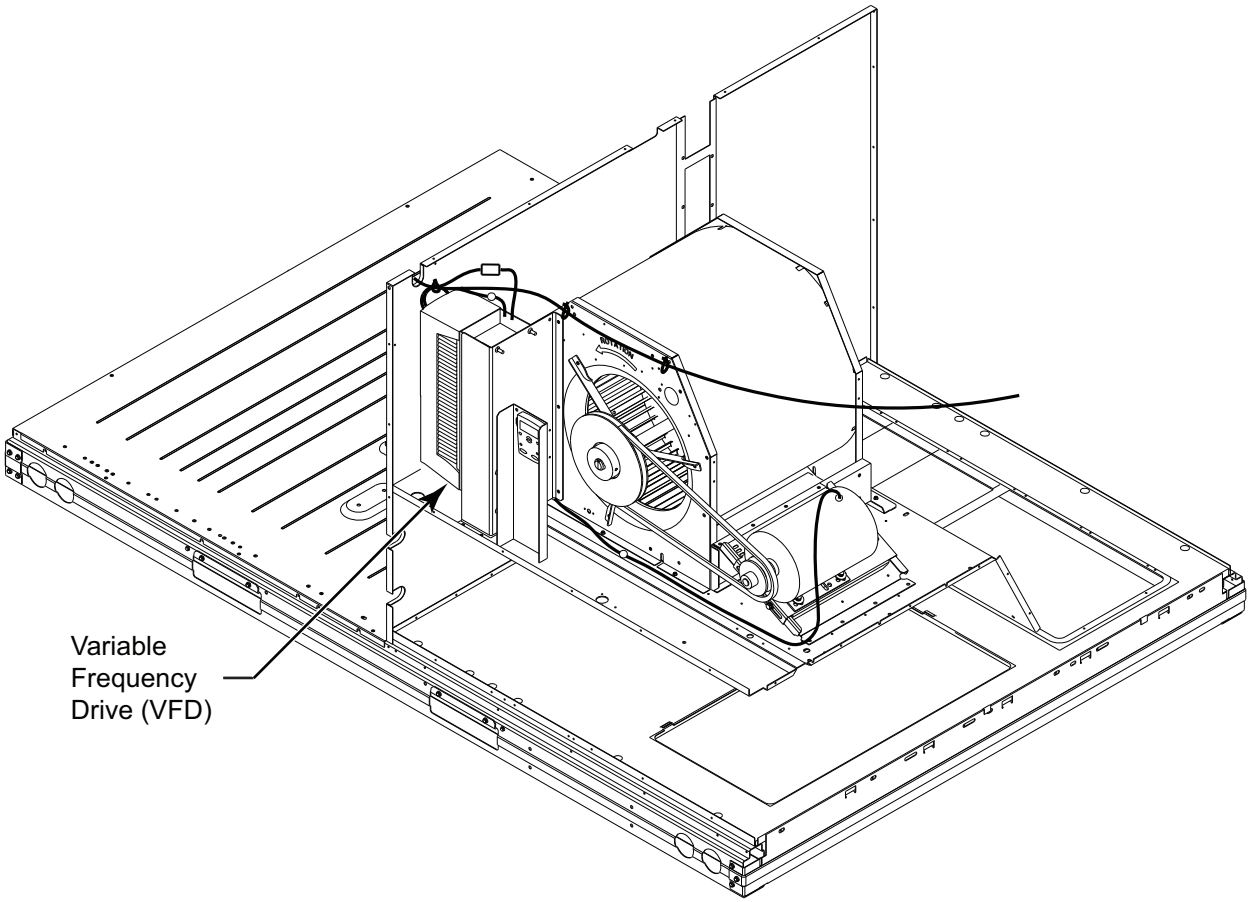


**Fig. 10 — ACH550/580 VFD Location for the following units: 48/50HC 07 and 50HCQ 07**

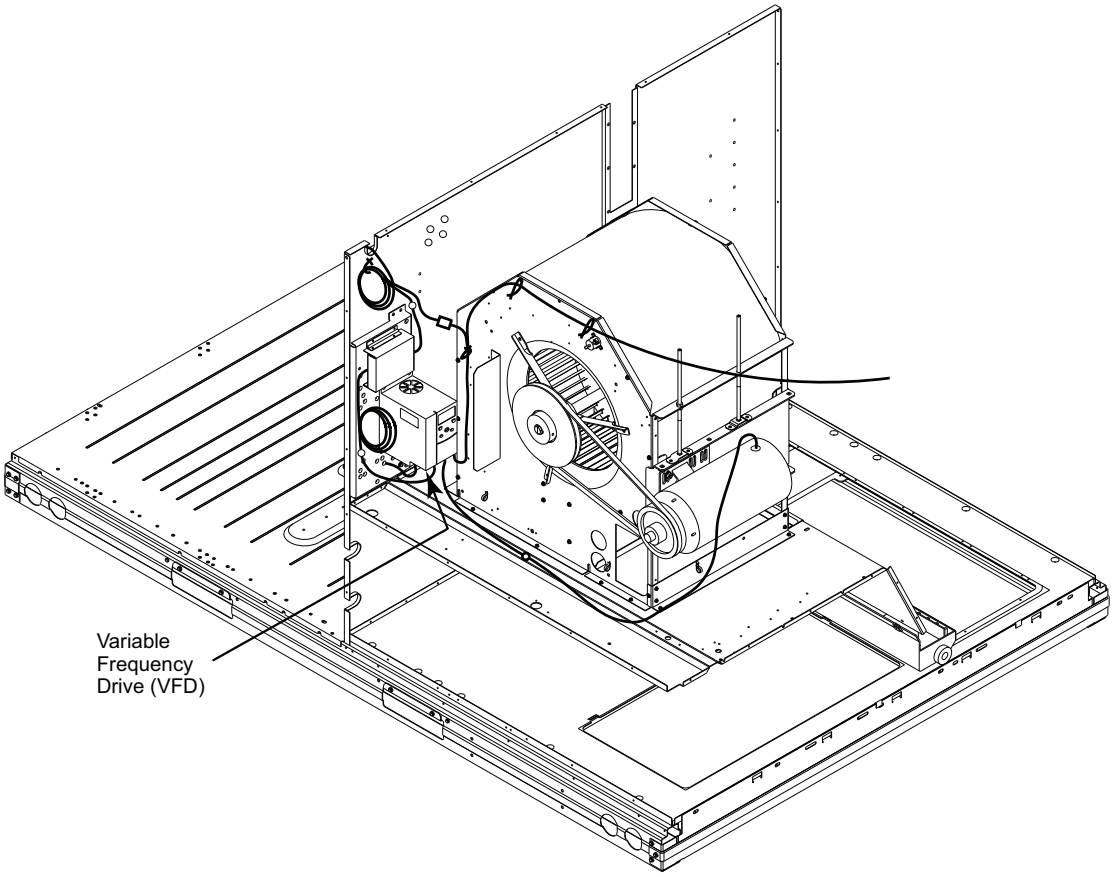


**Fig. 11 — ACS320 VFD Location for the following units: 48/50TC 09-14 and 50TCQ 08-12 (208/230V and 460V units only)**

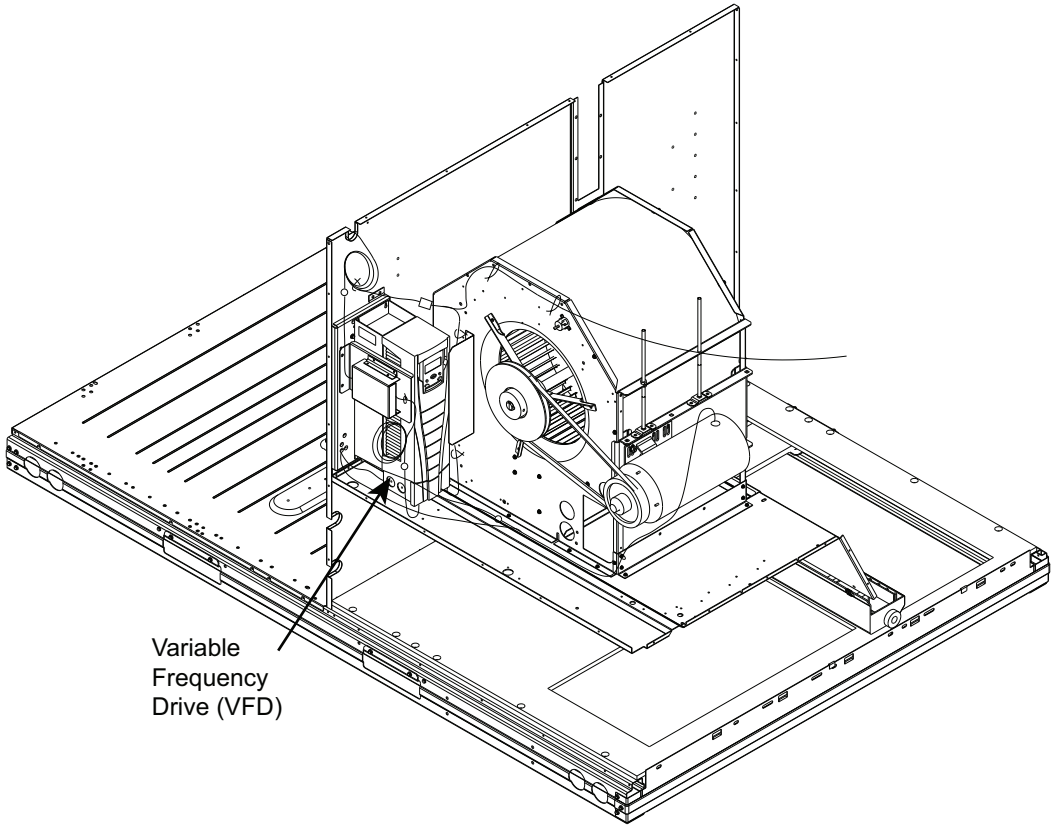


**Fig. 12 — ACH550/580 VFD Location for the following units: 48/50TC 09-14 and 50TCQ 08-12 (575V units only)**

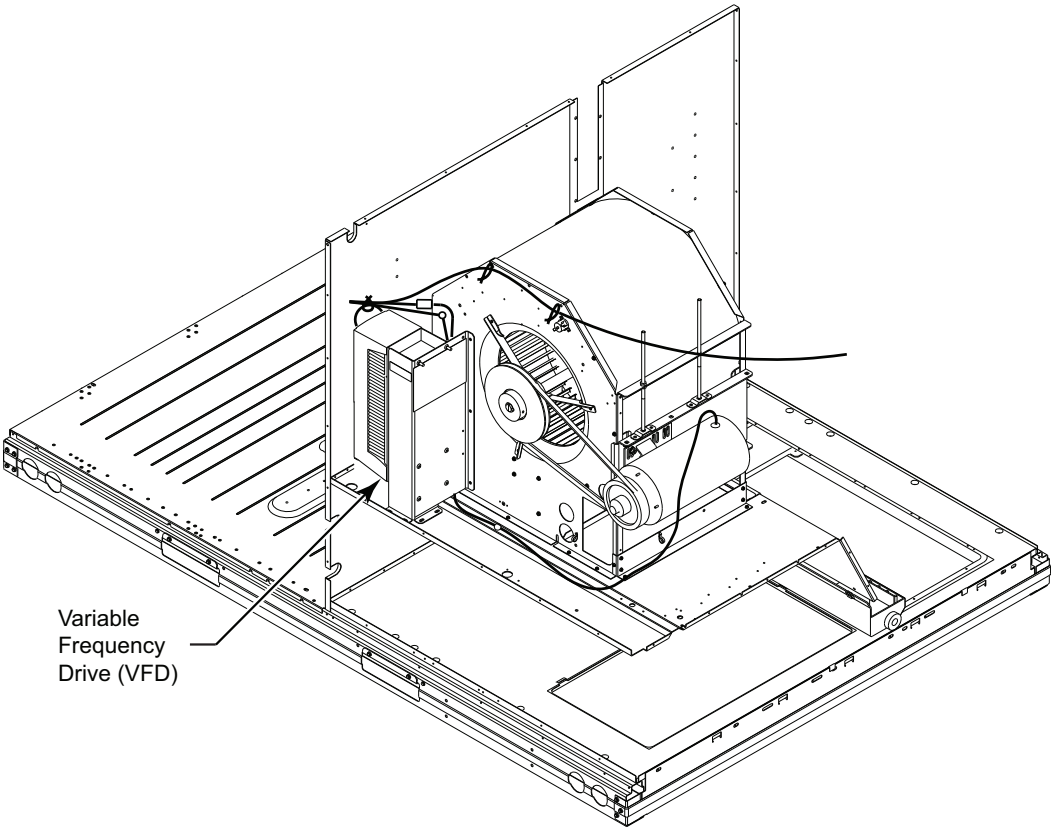


**Fig. 13 — ACH550/580 VFD Location for the following units: 48/50HC 08-09 and 50HCQ 08-09**

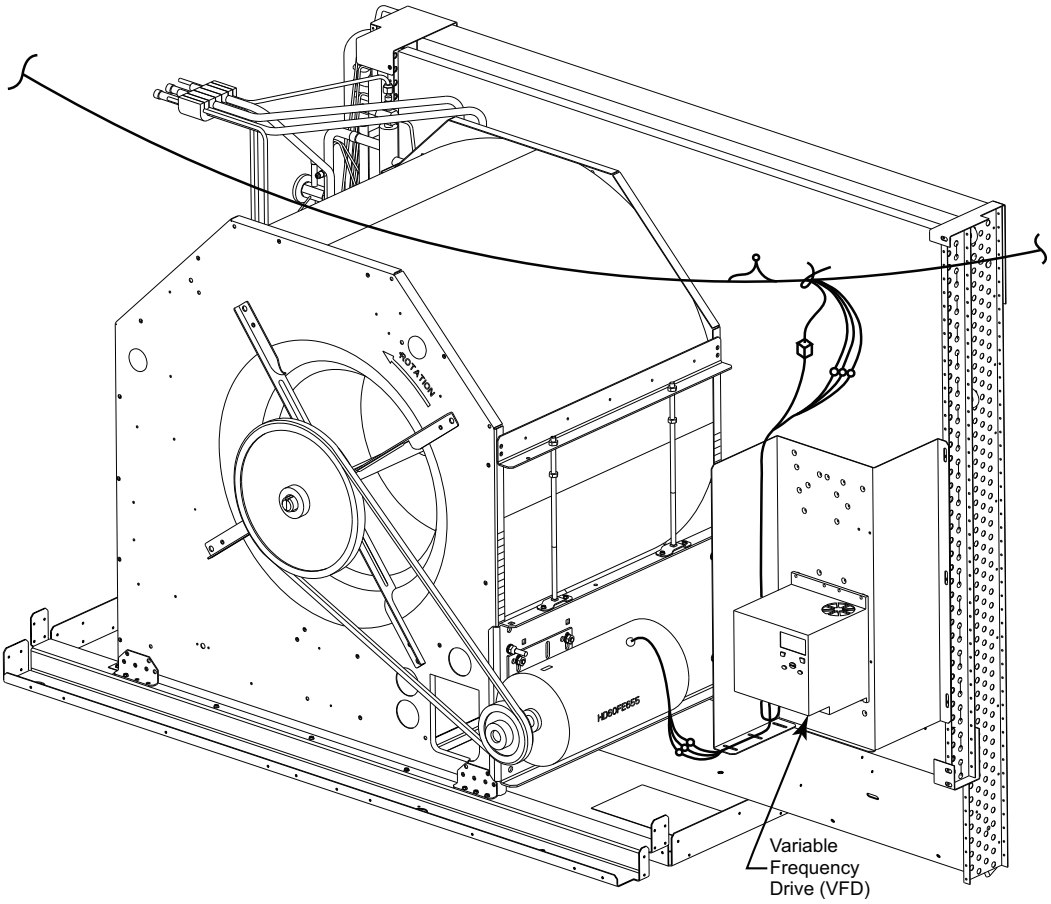


**Fig. 14 — ACS320 VFD Location for the following units: 48/50TC 16 and 50TCQ 14 (208/230V and 460V units only)**

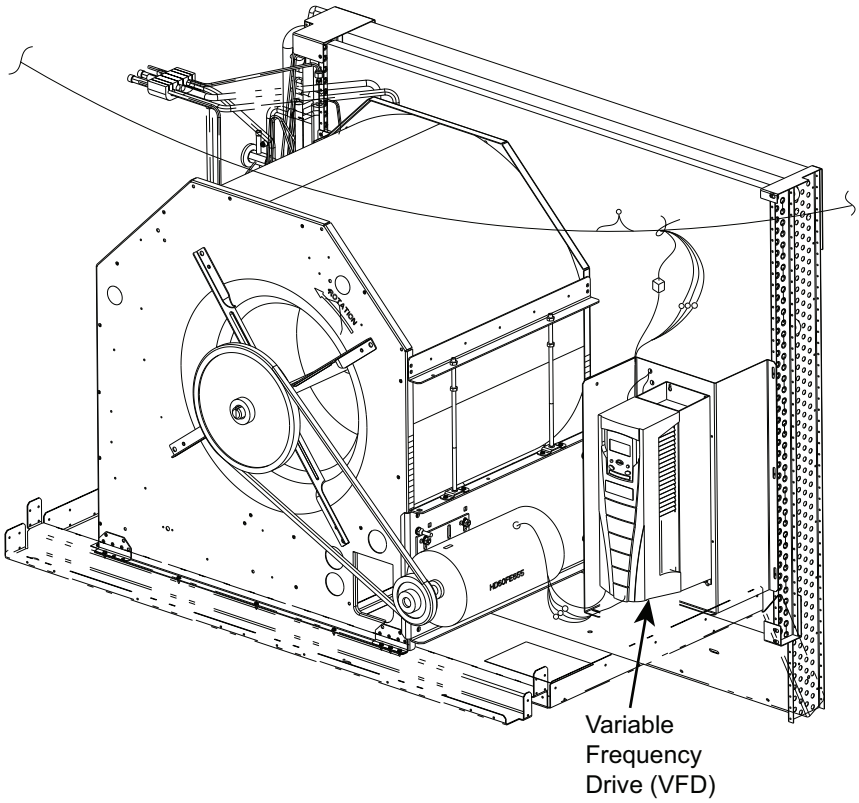


**Fig. 15 — ACH550/580 VFD Location for the following units: 48/50TC 16 and 50TCQ 14 (575V units only)**

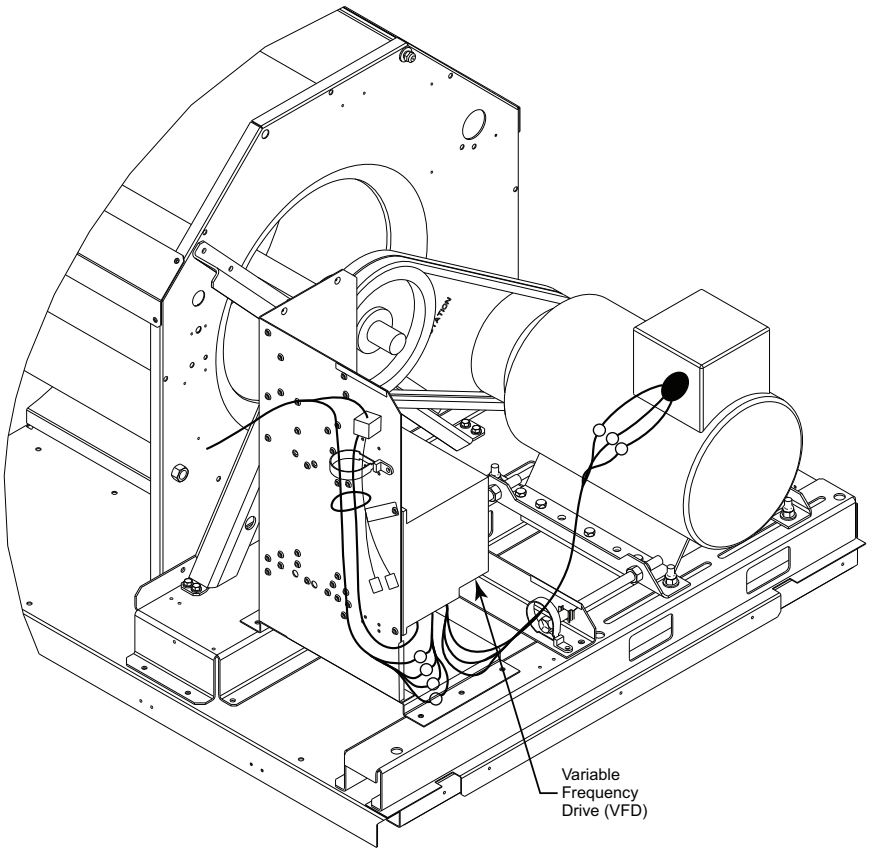


**Fig. 16 — ACS320 VFD Location for the following units: 48/50TC 17-30, 50TCQ 17-24 and 48/50HC 17-28 No ComfortLink Controls(208/230V and 460V units only)**

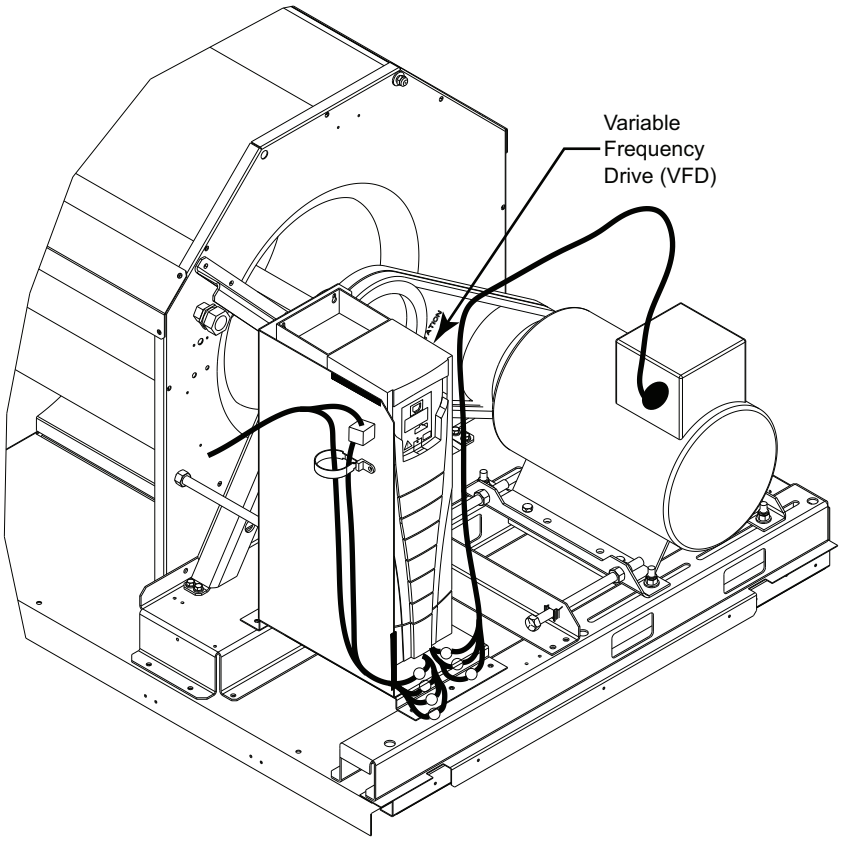


**Fig. 17 — ACH550/580 VFD Location for the following units: 48/50TC 17-30 and 50TCQ 17-24 (575V units only), 48/50HC 17-28 ComfortLink Controls and 575 Units**

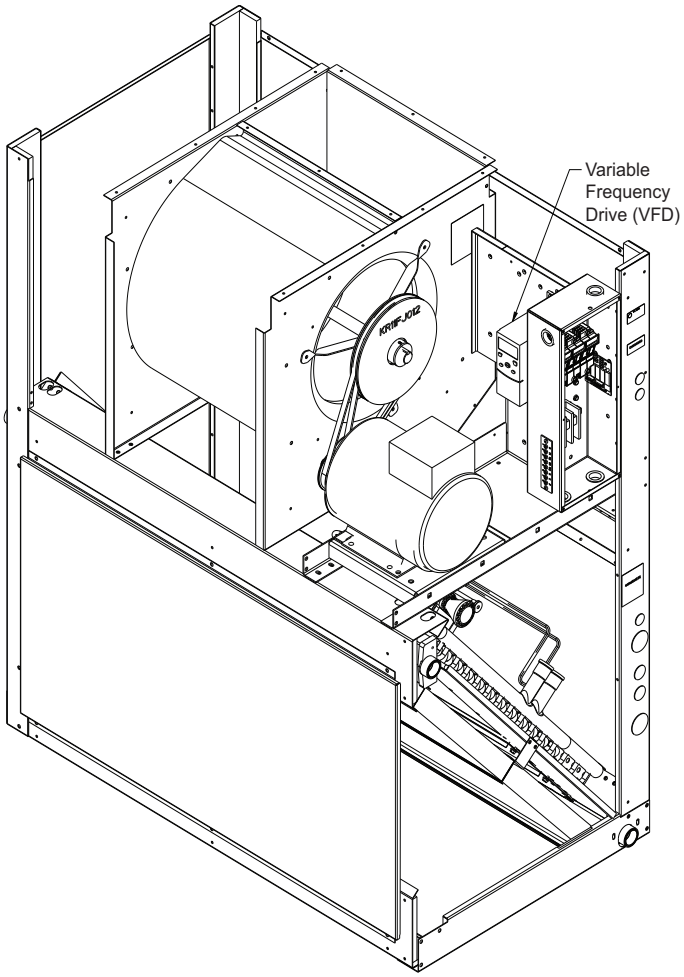


**Fig. 18 — ACS320 VFD Location for the following units: 40RUA/RUQ 07-12, 40RUS 08-12 (208/230V and 460V only)**

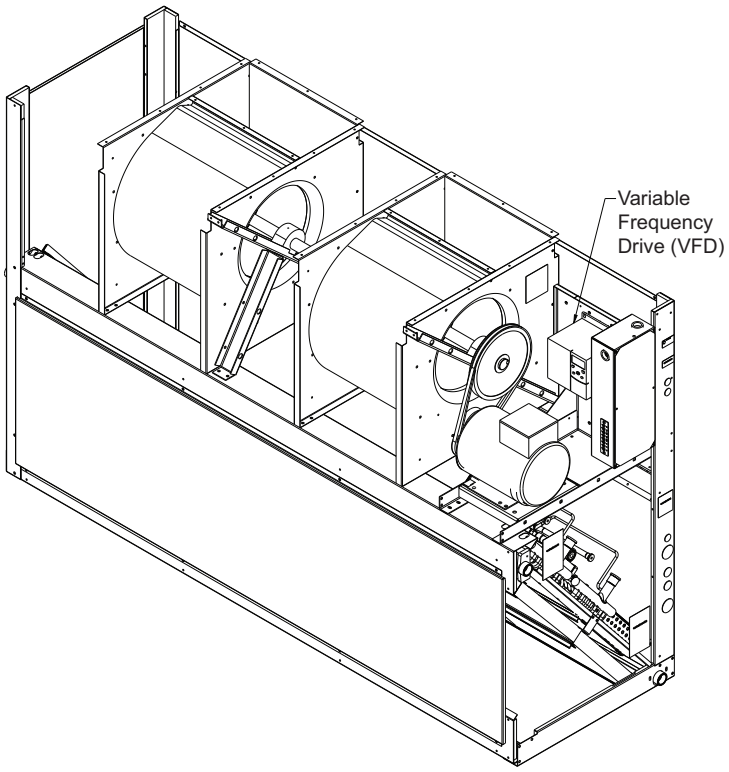


**Fig. 19 — ACS320 VFD Location for the following units: 40RUA/RUS 14-25, 40RUQ 16-25 (208/230V and 460V only)**

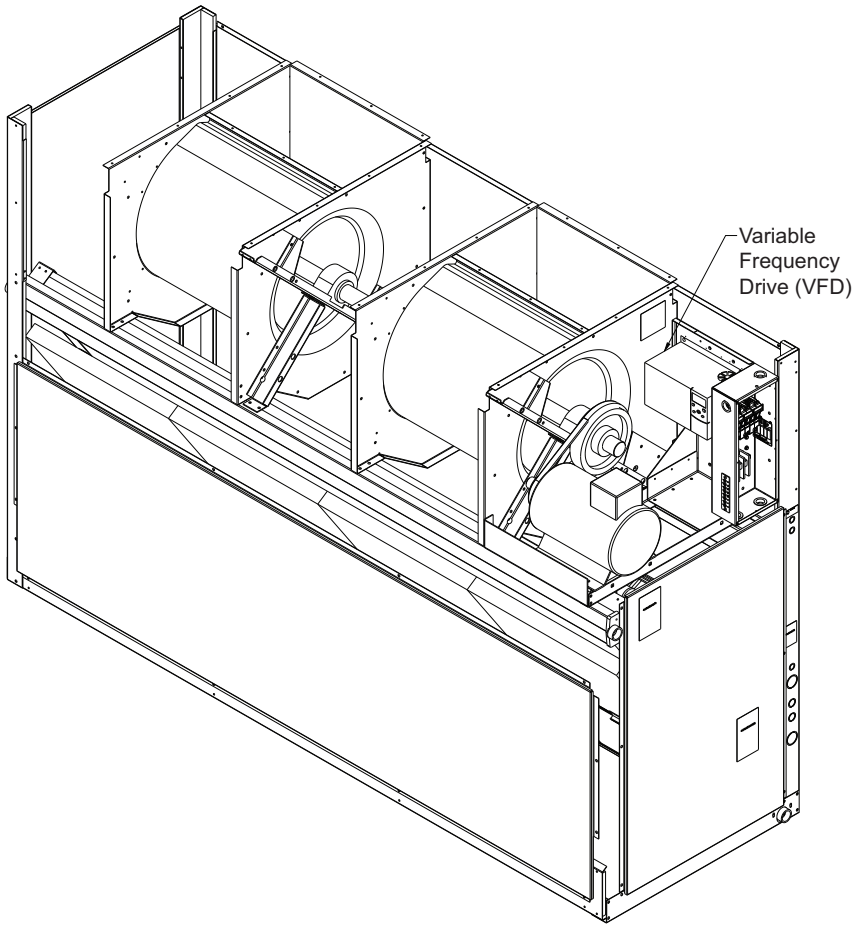


**Fig. 20 — ACS320 VFD Location for the following units: 40RUA/RUS 28-30 (208/230V and 460V only)**

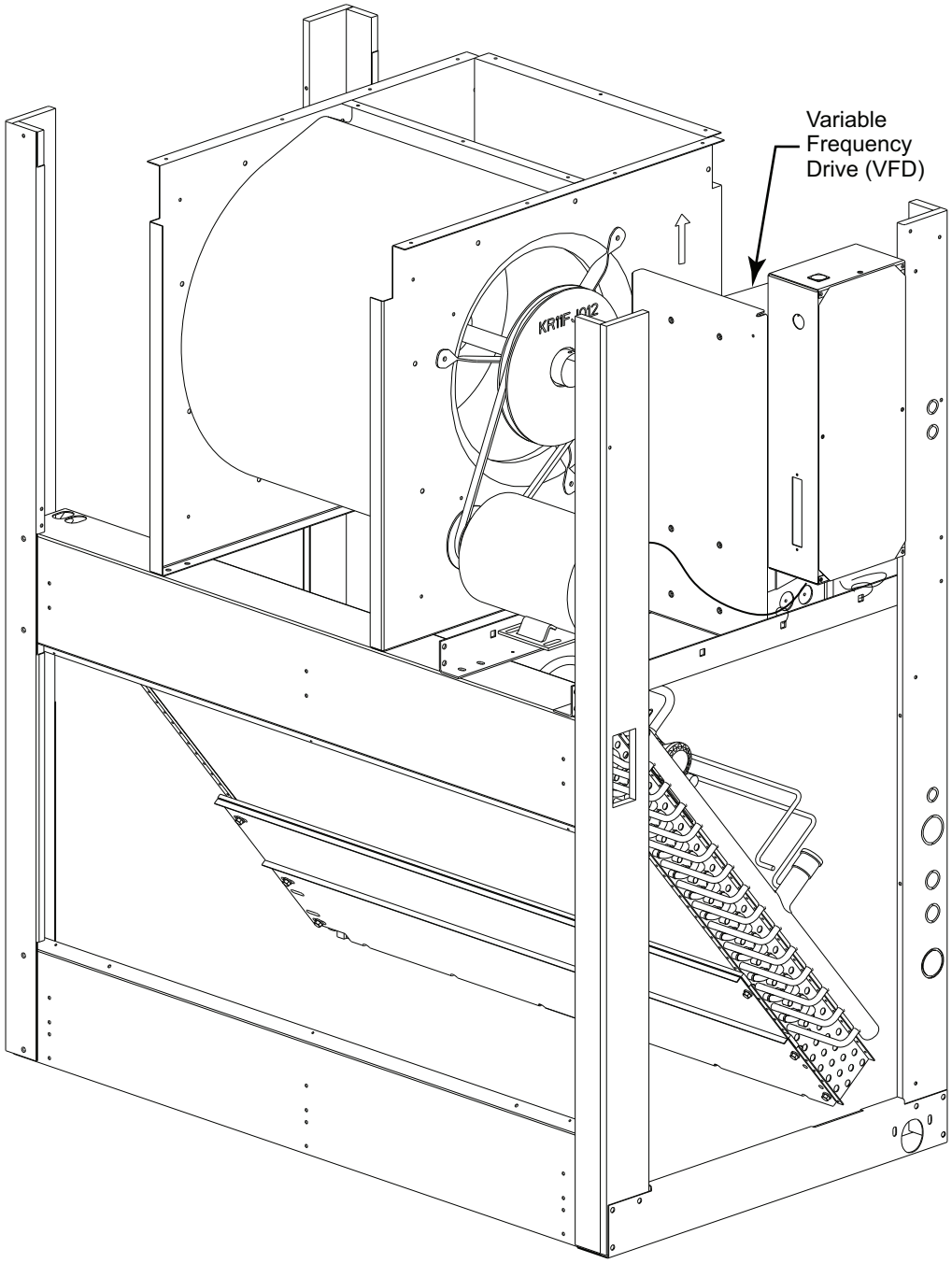


**Fig. 21 — ACH550/580 VFD Location for the following units: 40RUA/RUQ 07-12, 40RUS 08-12 (575V only)**

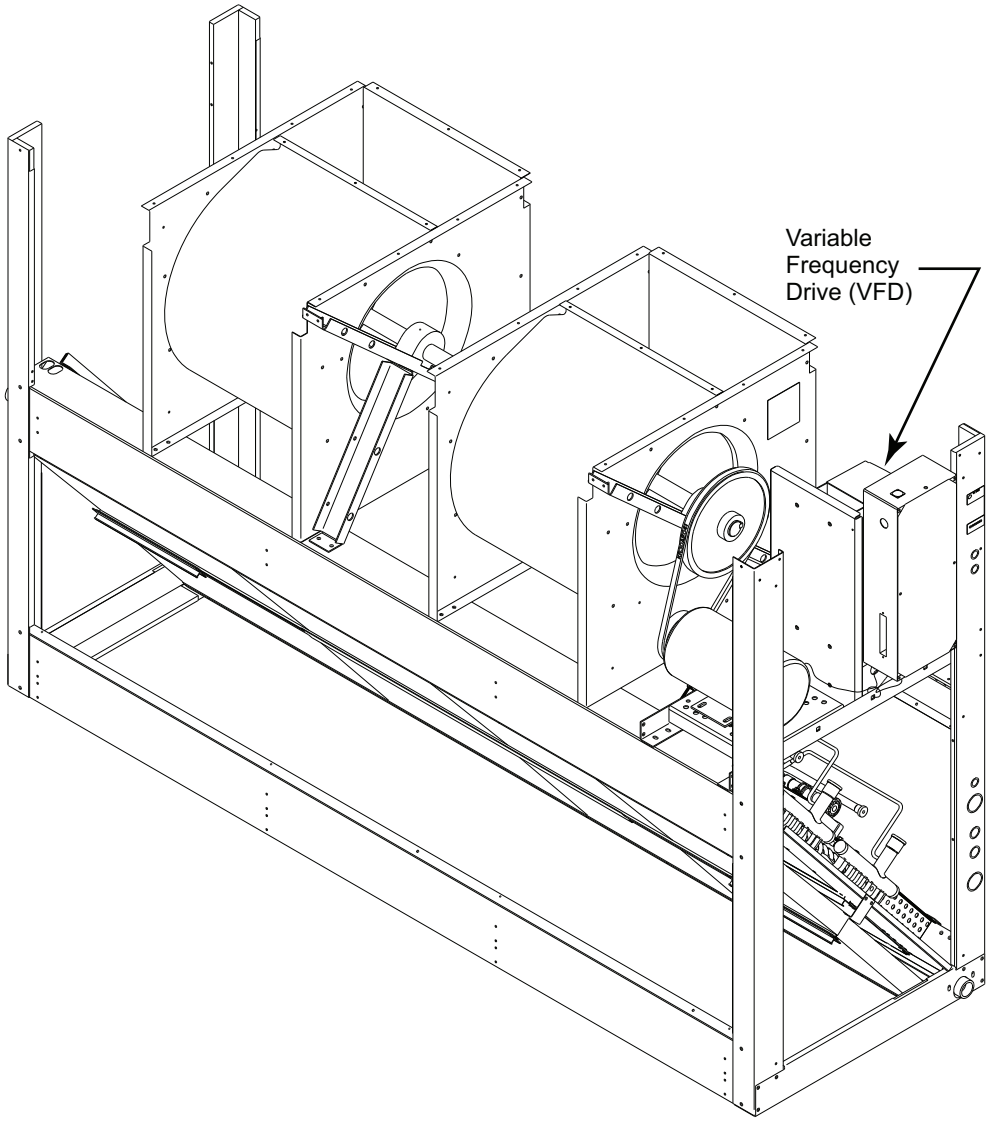


**Fig. 22 — ACH550/580 VFD Location for the following units: 40RUA/RUS 14-25, 40RUQ 16-25 (575V only)**

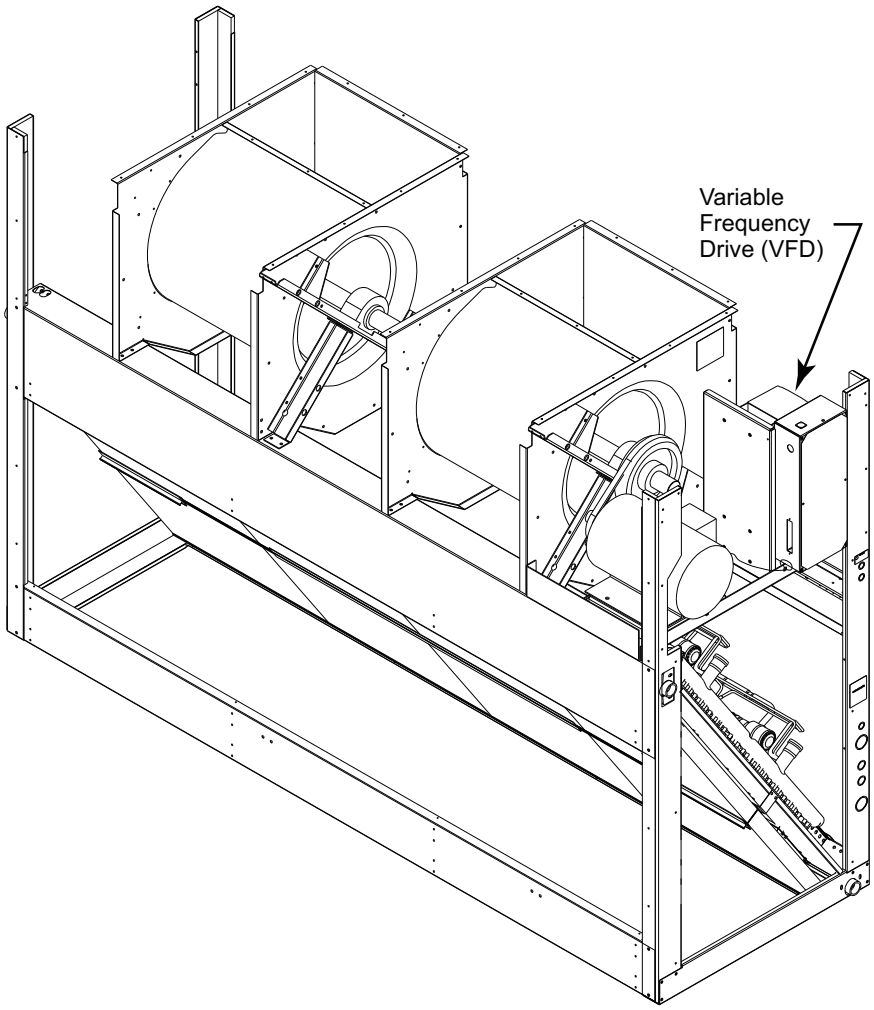


**Fig. 23 — ACH550/580 VFD Location for the following units: 40RUA/RUS 28-30 (575V only)**

## START-UP, SAV™ OPTION

### Compressor Rotation

Units equipped with a VFD on the indoor fan motor cannot use rotation direction of the indoor fan motor and fan to visually confirm a correct phase connection to the unit and compressors. Correct phases to equipment for proper compressor rotation. The VFD will maintain the same rotation as input phases are changed. Pressure gages MUST BE USED during cooling system start-up to confirm correct compressor rotation and operation.

### Indoor Fan Motor

Raise the cooling set point at the space thermostat to higher than space temperature. Switch the thermostat's FAN switch to CONT (Continuous) position. Fan motor will start, run at reduced speed.

Check for fan rotation direction. To reverse the fan rotation, disconnect all power to unit and then switch two motor power leads between the VFD and the motor. Restore unit power and recheck fan rotation direction.

Check fan motor speed. Motor shaft should be rotating at 1150 to 1180 rpm (19.2 to 19.7 r/s).

Switch the thermostat's FAN switch to AUTO position. Fan motor will stop.

### Cooling with SAV

FIRST STAGE (Y1)

Set the thermostat FAN switch to AUTO and the SYSTEM switch to COOL. Slowly lower the cooling set point until first stage compressor starts. Indoor fan motor also starts, runs at reduced speed.

SECOND STAGE (Y2)

Lower the cooling set point until second stage compressor starts. Indoor fan motor will switch to high speed.

Check fan motor speed. Motor shaft should be rotating at 1725 to 1760 rpm (28.8 to 29.3 r/s).

Confirm compressors are running at correct rotation by checking suction and discharge pressures. To reverse the compressor rotation, disconnect unit power and switch two of the unit's main power leads. Restore unit power and recheck compressor operation.

Reset thermostat cooling set point to a position above space temperature. Both compressors will shut off. Indoor fan motor will stop immediately.

40RU, 50 SERIES UNITS

Indoor fan motor will stop immediately.

48 SERIES UNITS

Indoor fan operation will continue for 45-seconds, then stop.

### Operating Sequences, SAV Option

VENTILATION (FAN ONLY)

Ventilation mode occurs when the indoor fan runs without accompanying cooling or heating system operation. The thermostat's FAN selection switch will be in CONT (Continuous) position; no demand for cooling or heating will be present.

48 SERIES UNITS

The thermostat's G terminal is energized with 24-v. This signal is conveyed to the 48 Series unit's Central Terminal Board (CTB) at the field connection TSTAT terminal strip at terminal G. The 24-v signal follows an internal trace path through jumper JMP6 to connector CONTL BOARD pin 1. A harness wire connects pin 1 to IGC board terminal G. The IGC energizes its fan relay, energizing IGC terminal IFO. This 24-v signal follows a harness conductor back to the CTB's CONTL BOARD connector at pin 6 and pin 7. Pin 7 is connected to the Fan Speed Board at connector J1 pin 4. Relay K3 is energized. A 24-VDC signal is passed to the VFD terminal 14. The VFD starts the indoor fan motor and runs it at 40 Hz for reduced/low speed operation.

50HC, TC SERIES UNITS

The thermostat's G terminal is energized with 24-v. This signal is conveyed to the 50HC,TC Series unit's Central Terminal Board (CTB) at the field connection TSTAT terminal strip at terminal G. The 24-v signal follows an internal trace path through jumper JMP6 to connector CONTL BOARD pin 1. A harness wire connects pin 1 to the Fan Speed Board at connector J1 pin 4. Relay K3 is energized. A 24-VDC signal is passed to the VFD terminal 14. The VFD starts the indoor fan motor and runs it at 40 Hz for reduced/low speed operation.

50HCQ, TCQ SERIES

The thermostat's G terminal is energized with 24-v. This signal is conveyed to the 50HCQ,TCQ Series unit's Central Terminal Board (CTB) at the field connection TSTAT terminal strip at terminal G. The 24-v signal follows an internal trace path to connector REHEAT/DEFROST pin 1. A harness wire connects pin 1 to DFB board terminal P2-3. The DFB energizes its fan relay, energizing DFB terminal P3-8. This 24-v signal follows a harness conductor back to the CTB's REHEAT/DEFROST pin 2. An internal trace path connects pin 2 to CONTL BOARD connector at pin 1. Pin 1 is connected to the Fan Speed Board at connector J1 pin 4. Relay K3 is energized. A 24-VDC signal is passed to the VFD terminal 14. The VFD starts the indoor fan motor and runs it at 40 Hz for reduced/low speed operation.

## Cooling (FAN Switch in AUTO)

FIRST STAGE (Y1)

When the thermostat initiates a call for First Stage Cooling by closing its Y1 contacts, the thermostat also energizes its G terminal. Follow the sequence under Ventilation above. Fan Speed Relay board relay K3 is energized, causing the VFD to start the indoor fan motor and run at 40 Hz for reduced fan speed operation.

When space temperature drops to satisfy the thermostat Y1 demand, contact Y1 opens de-energizing terminal G. Relay K3 is de-energized. The relay board output at J2-2 to the VFD is removed and indoor fan motor ramps down to stop.

SECOND STAGE (Y2)

If space temperature continues to rise, thermostat Y2 demand will be initiated. Contact Y2 will close, sending a 24-v signal to CTB's TSTAT terminal strip at Y2. An internal path passes this signal to connector DDC/TSTAT pin 6. A harness wire carries this signal to Fan Speed Relay board pin J1-3. Relay K2 is energized. The relay board's output to VFD at pin J2-2 is de-energized and the output at J2-3 is energized, causing the VFD to shift its output to the indoor fan motor to 60 Hz. The indoor fan motor ramps up to full/high speed operation.

When the space temperature drops to satisfy thermostat Y2 demand, contact Y2 opens de-energizing terminal Y2. Relay K2 is de-energized, removing the VFD input at terminal 15. Fan Speed Board output at pin J2-2 is restored to the VFD at terminal 14; VFD shifts back to 40 Hz output to the indoor fan motor and motor shifts back to reduced speed operation.

## Heating

When the thermostat initiates a call for First Stage Heating by closing its W1 contacts, a 24-v signal is conveyed to the CTB's TSTAT terminal strip at W1. An internal path passes this signal to connector DDC/TSTAT pin 5. A harness wire carries this signal to Fan Speed Relay board pin J1-2. Relay K1 is energized. The relay board's output to VFD at pin J2-3 is energized, providing a 24VDC signal to VFD terminal 15. The VFD starts the indoor fan motor, runs at 60 Hz for full/high speed operation.

When space temperature rises to satisfy the thermostat W1 demand, contact W1 opens de-energizing terminal W1. Relay K1 is de-energized. The relay board output at J2-3 to the VFD is removed.

40RU, 50-SERIES

Indoor fan motor ramps down to stop.

48-SERIES

The IGC's fan-off delay sequence will energize relay K3 for 45-seconds, causing the VFD to operate the indoor fan motor at 40 Hz (low speed) for 45-seconds, then indoor fan motor will ramp down to stop.

## Operating Fan for Test and Balance

During the Test and Balance procedure, it is necessary to operate the supply fan in High Speed without concurrent operation of the Cooling or Heating systems. Use the following procedure to force the fan speed to High.

UNITS WITHOUT ACCESSORY KEYPAD

1. Set the space thermostat to SYSTEM OFF and FAN in AUTO.
2. Disconnect unit power. Lock-out/tag out.
3. Open the fan access panel and locate the VFD (see Fig. 6-23 for your specific unit).
4. Locate and connect the WHT and YEL wires extending from the VFD. The two wires are bundled together using the label shown in Fig. 24.

| | |
|---|---|
| | ***IMPORTANT*** |
| | CONNECT WHITE & YELLOW WIRES FOR HIGH SPEED BLOWER TEST |
| | DISCONNECT FOR NORMAL OPERATION |
| | 48TM504557 |

**Fig. 24 — High Speed Test Label**

5. Locate pressure ports or pitot tubes in the return duct and supply duct to measure external static pressure. See Fig. 25 for typical locations.
6. Restore unit power.
7. Set the space thermostat to FAN CONT.
8. Check the motor speed with stroboscope or similar tool. Motor shaft speed must be in 1725 to 1760 RPM (28.8 to 29.3 r/s) range for High Speed.
9. Replace the fan access panel.
10. Perform test and balance procedure.
11. Adjust the supply fan speed according to base unit instructions to deliver the project selection CFM value. Ensure the selection CFM value is not lower that the "Min CFM Per Fan Motor Type" for this unit-size as found in Tables 2-10 on page 4.

To restore the unit to ready-to-start condition, disconnect the unit power and lock-out/tag-out, set the space thermostat to FAN AUTO, remove the test pressure ports from the external duct locations, and disconnect the WHT and YEL wires. Replace the supply fan access panel. Restore unit power.

UNIT WITH ACCESSORY VFD KEYPAD

1. Set the space thermostat to SYSTEM OFF and FAN in AUTO.
2. Disconnect unit power. Lock-out/tag-out.
3. Open the fan access panel (see Fig. 6-23 for specific unit).
4. Locate pressure ports or pitot tubes in the return duct and supply duct to measure external static pressure. See Fig. 25 for typical locations.
5. Restore unit power.
6. Set the space thermostat to FAN CONT.
7. At the VFD keypad, tap the HAND key and then tap the UP arrow button to increase the motor speed until 60.0 is displayed on the display screen.
8. Check the motor speed with stroboscope or similar tool. Motor shaft speed must be in 1725 to 1760 RPM (28.8 to 29.3 r/s) range for High Speed.
9. Replace the fan access panel.
10. Perform Test and Balance procedure.
11. Adjust the supply fan speed according to base unit instructions to deliver the project selection CFM value. Ensure the selection CFM value is not lower that the "Min CFM Per Fan Motor Type" for this unit-size as found in Tables 2-10 on page 4.

To restore the unit to ready-to-start condition, tap the DOWN arrow button to reduce motor speed until the 40.0 is displayed on the display screen and then tap the AUTO key. Disconnect the unit power and lock-out/tag-out, set the space thermostat to FAN AUTO. Remove the test pressure ports from the external duct locations. Restore unit power.

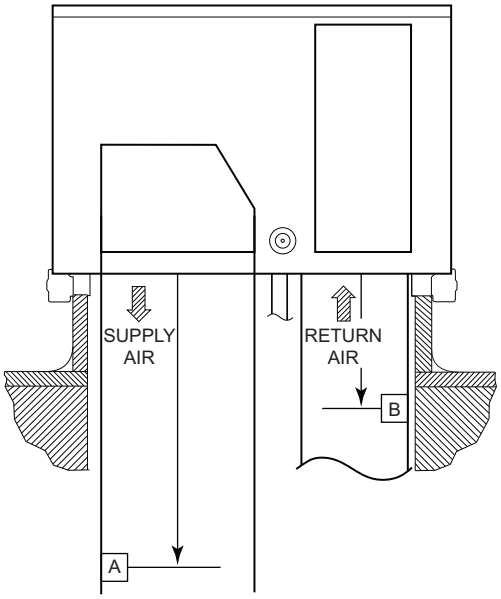


**AHRI PRESSURE LOCATIONS**

| MODEL | SIZES | in. Supply Air [A] | in. Return Air [B] | mm Supply Air [A] | mm Return Air [B] |
|---|---|---|---|---|---|
| 48/50HC | 07-12 | 43.5 | 12 | 1100 | 310 |
| | 14 | 64.5 | 14 | 1640 | 350 |
| | 17-28 | 83 | 19 | 2110 | 490 |
| 48/50TC | 07 | 32 | 10 | 830 | 260 |
| | 08-14 | 43.5 | 12 | 1100 | 310 |
| | 16 | 64.5 | 14 | 1640 | 350 |
| | 17-30 | 83 | 19 | 2110 | 490 |
| 50HCQ | 07-09 | 43.5 | 12 | 1100 | 310 |
| | 12 | 44.5 | 13 | 1130 | 330 |
| 50TCQ | 07 | 32 | 10 | 830 | 260 |
| | 08-12 | 43.5 | 12 | 1100 | 310 |
| | 14 | 44.5 | 14 | 1130 | 350 |
| | 17-24 | 83 | 19 | 2110 | 490 |

**Fig. 25 — Measuring External Static Pressure — Distance Below Unit Base**

**⚠ CAUTION**

EQUIPMENT DAMAGE HAZARD

Failure to follow this caution will result in equipment damage.

**DO NOT** exceed the recommended minimum Hz or CFM settings. Operating these units at a Hz setting below 40 Hz or at a CFM below the minimums listed in Tables 2-10 (page 4) will result in damage to the unit.

Figures 6-23 show the location of the VFD option in the various units covered by this document.

## SAV™ Option Components

The SAV factory option is comprised of three major components and related connecting harnesses:

1. Fan Speed Relay Board
2. Variable Frequency Drive
3. Indoor Fan Motor, designed for use with VFD

## Fan Speed Relay Board

This board (P/N HK50ZA002) is designated as the VFD Fan Board on the unit wiring diagram labels. It is a small (3.0 x 3.12 in., 76 x 79 mm) printed circuit board with four SPDT control relays. See Fig. 26. There is no software on this board. The relay board is located in the unit's main control box; refer to unit label diagram for Component Location view.

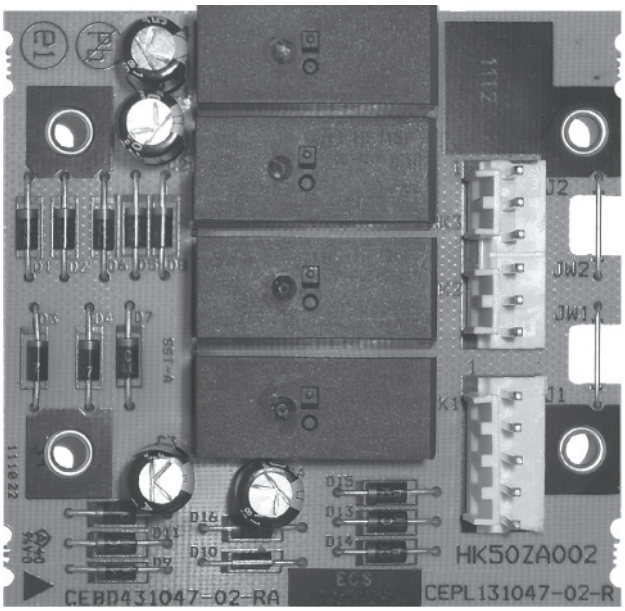


**Fig. 26 — VFD Fan Board**

The board is arranged in two separate circuits with individual pin connectors. Connector J1 is connected to the 24-vac input signal circuit with the four relay coils. Connector J2 is connected to the 24-VDC output circuit that connects to the VFD's terminal strip. See Fig. 28 (on page 20) for a simplified connection schematic for Fan Speed Relay board and the VFD.

In this SAV application, there are three inputs to the relay board, originating from the space thermostat's G, Y2 and W1 terminals. An input from terminal G (for continuous fan operation for ventilation or from a Y1 call) will result in the VFD starting the indoor fan motor and running the motor at LOW speed. An input from either Y2 or W1 will result in the VFD running the indoor fan motor at HIGH speed. See Table 11 for relay operation for each unit mode. Relay K4 is not used in this 2-speed application.

**Table 11 — Two-Speed Configuration Logic (Thermostat Control)**

| INPUT | RELAY COIL STATUS | | | CONTROLLING OUTPUT | FAN MOTOR SPEED |
|---|---|---|---|---|---|
| | K1 | K2 | K3 | | |
| G | Off | Off | On | K3 | Low (40 Hz) |
| Y1 | Off | Off | On | K3 | Low (40 Hz) |
| Y2 | Off | On | On | K2 | High (60 Hz) |
| W1 | On | On | On | K1 | High (60 Hz) |

## Configuration Jumpers

The relay board has two configuration jumpers, marked JW1 and JW2. For this 2-speed motor application, both jumpers must be cut and open (see Fig. 27). Factory-installed boards will have these jumpers cut. Service replacement boards have these jumpers intact; servicer must cut both jumpers when installing a new service board. Failure to cut these jumpers will cause continuous fan motor operation.

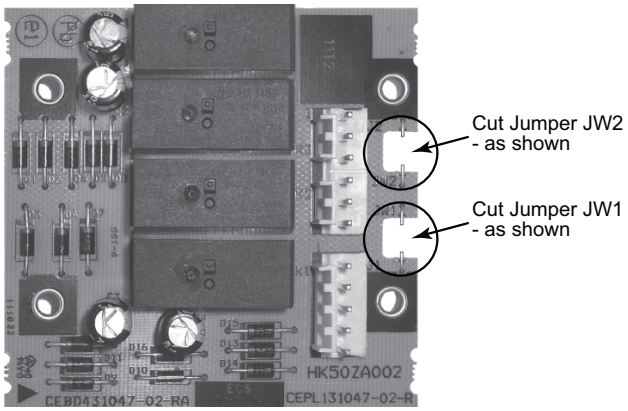


**Fig. 27 — Jumpers JW1 and JW2 Cut for Two-Speed Fan Board Configuration**

## Variable Frequency Drive

The VFD switches the indoor fan motor speed between full/high speed (60 Hz motor operation) and reduced/low speed (40 Hz motor operation) as required by ASHRAE 90.1-2016 and IECC-2015 requirements for two-stage HVAC units. The VFD is factory-configured to match the current and power requirements for each motor selection and all wiring connections are completed by the factory; no field adjustments or connections are necessary.

While the basic VFD retains all of its standard capabilities, the SAV 2-speed application uses only a limited portion of these features to provide two discrete output speeds to the motor. Consequently the VFD is not equipped with a keypad. A keypad is available as an accessory (P/N CRDISKIT001A00) ACH550/ACS320 or (P/N CRDISKIT003A00) ACH580 for field-installation or expanded service access to VFD parameter and troubleshooting tables.

**⚠ CAUTION**

CONFIGURATION OVERRIDE HAZARD

**DO NOT USE ABB OR CARRIER START-UP ASSISTANT ON THIS VFD APPLICATION!** Use of start-up assistant will override the factory VFD configurations!

The SAV control circuit inputs to the VFD are 24-VDC signals.

- For ACS320 VFDs the voltage is sourced from the VFD at its terminal 9 (+24 V). SAV speed inputs are received at terminals 13 (DI-2) for low speed (40 Hz) motor operation and 14 (DI-3) for high speed (60 Hz) motor operation. See Table 12 and Fig. 29 (on page 21).

- For ACH550/580 VFDs the voltage is sourced from the VFD at its terminal 10 (+24 V). SAV speed inputs are received at terminals 14 (DI-2) for low speed (40 Hz) motor operation and 13 (DI-3) for high speed (60 Hz) motor operation. See Table 13 and Fig. 30 (on page 21).

When neither input is present, the VFD will shut the fan motor off. There is no separate indoor fan contactor required in this application.

The VFD used in the SAV™ system has soft start capabilities to slowly ramp up the speeds, eliminating any high inrush of air volume during speed changes. It also has internal over current protection for the fan motor.

INDOOR FAN MOTOR

The indoor fan motors used with the VFD are specially manufactured for use with VFD power circuits. The motor winding insulation is specially formulated to resist breakdown due to voltage stress issues. The motor shaft includes grounding rings to prevent damage to bearings caused by grounding currents. Replace these motors with Factory Authorized Parts available from Replacement Components Division (RCD).

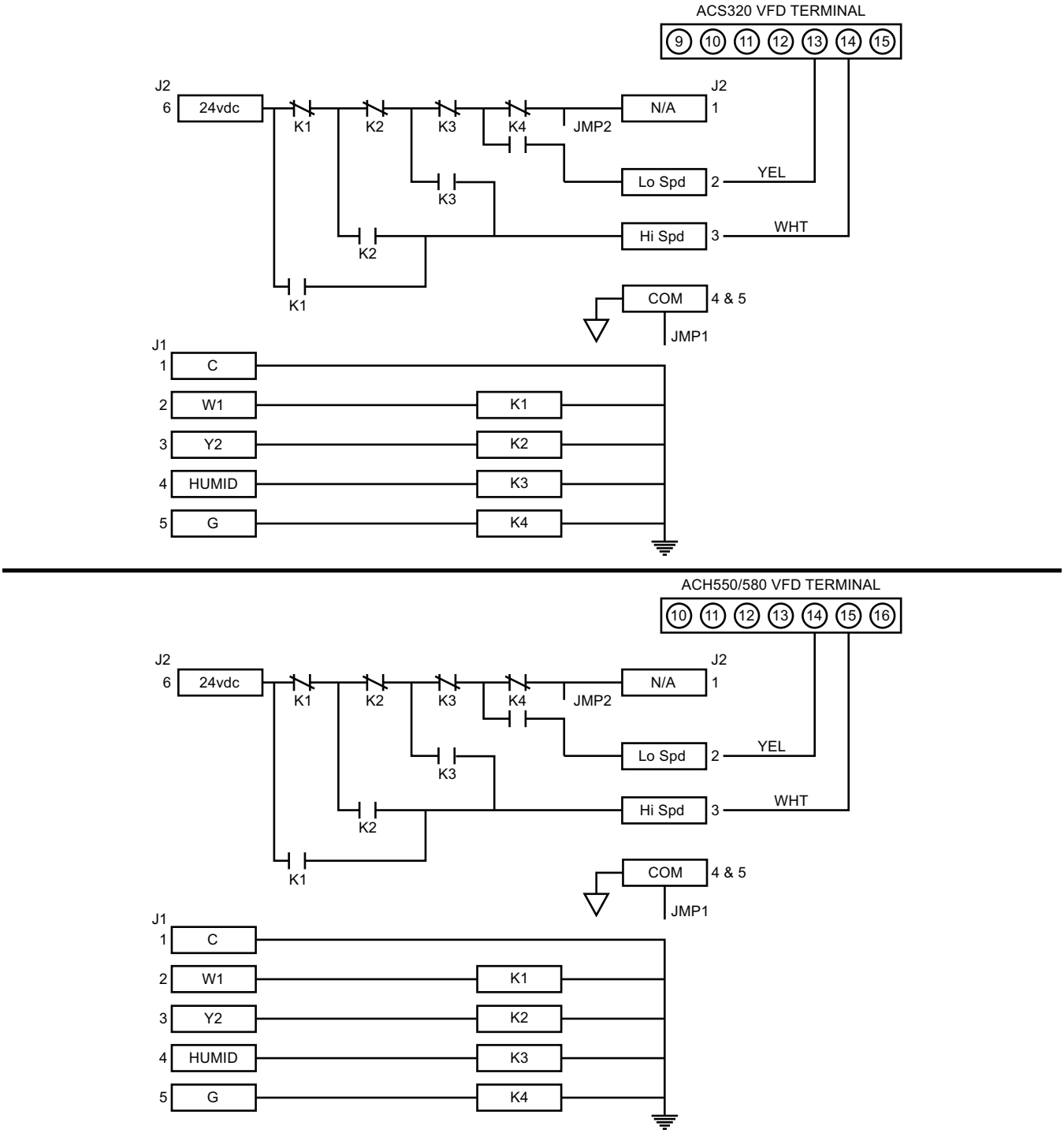


**Fig. 28 — Connection Schematic - Fan Speed Relay Board and VFD**

### Table 12 — ACS320 VFD Terminal Designations

| TERMINAL | FUNCTION |
|---|---|
| U1<br>V1<br>W1 | Three-Phase main circuit input power supply |
| U2<br>V2<br>W2 | Three-Phase AC output to motor, 0V to maximum input voltage level |
| 10 (GND)<br>11 (COMMON) | Factory-supplied jumper |
| 9 (24 VDC)<br>12 (DI-1) | Run (factory-supplied jumper) |
| 9 (24 VDC)<br>15 (DI-4) | Start Enable 1 (factory-supplied jumper). When opened, the drive goes to emergency stop |
| 13 (DI-2)<br>14 (DI-3) | Factory wired for 24 Vdc input from Fan Speed Board |

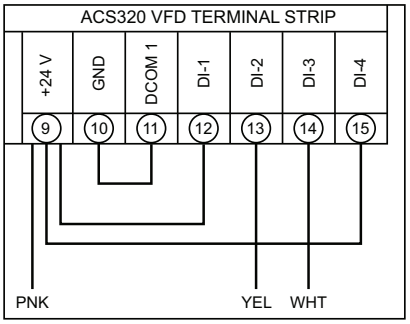


**Fig. 29 — ACS320 VFD Wiring**

### Table 13 — ACH550/580 VFD Terminal Designations

| TERMINAL | FUNCTION |
|---|---|
| U1/L1<br>V1/L2<br>W1/L3 | Three-Phase main circuit input power supply |
| U2 / T1/U<br>V2 / T2/V<br>W2 / T3/W | Three-Phase AC output to motor, 0V to maximum input voltage level |
| 11 (GND)<br>12 (COMMON) | Factory-supplied jumper |
| 10 (24 VDC)<br>13 (DI-1) | Run (factory-supplied jumper) |
| 10 (24 VDC)<br>16 (DI-4) | Start Enable 1 (factory-supplied jumper). When opened, the drive goes to emergency stop |
| 14 (DI-2)<br>15 (DI-3) | Factory wired for 24 Vdc input from Fan Speed Board |

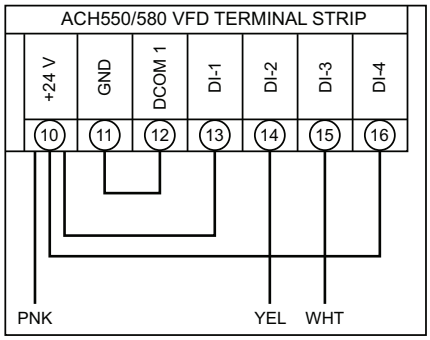


**Fig. 30 — ACH550/580 VFD Wiring**

## Central Terminal Board Jumpers (48/50 Series Only)

The Central Terminal Board (CTB) is a large printed circuit board that is located in the unit control box. This printed circuit board contains multiple termination strips and connectors to simplify factory control box wiring and field control connections. Terminals are clearly marked on the board surface. See Fig. 31.

The CTB contains no software and no logic. But it does include seven configuration jumpers that are cut to configure the board to read external optional and accessory controls, including that the unit is a heat pump. Table 14 lists the control functions of the jumpers.

### Table 14 — CTB Jumpers

| JUMPER | CONTROL FUNCTION | NOTE |
|---|---|---|
| JMP1 | Phase Monitor | |
| JMP2 | Occupancy Control | |
| JMP3 | Smoke Detector Shutdown | |
| JMP4 | Remote Shutdown | |
| JMP5 | Heat Pump/Reheat | 50HCQ, TCQ default: Cut |
| JMP6 | Heat Pump/Reheat | 50HCQ, TCQ default: Cut |
| JMP7 | Heat Pump/Reheat | 50HCQ, TCQ default: Cut |

Jumpers JMP5, JMP6 and JMP7 are located in notches across the top of the CTB (see Fig. 31). These jumpers are intact on units with gas heat or electric heat. These jumpers are factory cut on all heat pump units and on units with Humidi-MiZer® (reheat) system option.

Factory-installed boards will have these jumpers factory-cut where required. Service replacement boards have these jumpers intact; servicer must cut these jumpers as indicated in Table 15 when installing a replacement board.

### Table 15 — Jumper Configuration

| | UNIT TYPE / MODEL | | |
|---|---|---|---|
| Configuration Jumper | Gas Heat 48HC, TC[a] | Electric Heat 50 HC, TC[a] | Heat Pump 50HCQ, TCQ |
| JMP5 | Intact | Intact | Cut |
| JMP6 | Intact | Intact | Cut |
| JMP7 | Intact | Intact | Cut |

NOTE(S):

a. Unit without Humidi-MiZer (reheat) option.

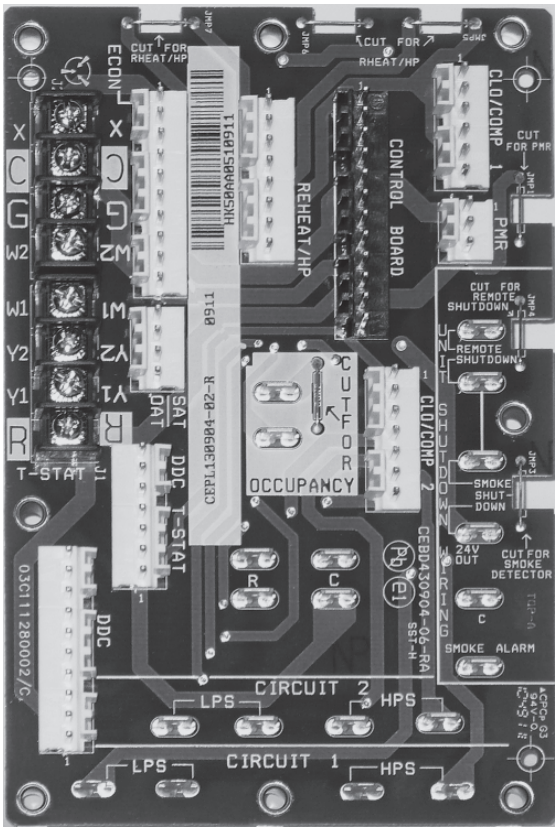


**Fig. 31 — Central Terminal Board (CTB)**

## VFD Fuses

Table 16 details the fuse requirement for the VFD installed in 48/50TC, 50TCQ, 48/50HC, and 50HCQ units. Table 17 details the fuse requirement for the VFD installed in 40RU units. Check the control wiring diagram label on the specific unit in use for the fuse location.

### Table 16 — VFD Fuse Requirements, 48/50TC, 50TCQ, 48/50HC, and 50HCQ Units

| UNIT | HP | VOLTAGE | VFD (ASC320/ACH550/ACH580) | MOTOR | STANDARDIZED FUSE | FUSE P/N | HARNESS WIRE GAUGE[a] |
|---|---|---|---|---|---|---|---|
| 48/50TC07-14 50TCQ07-12 48/50HC07-12 50HCQ07-09 | 1.7 | 208/230 | HK30WA523 | HD56FR233 | 30A - CLASS CC KTK | HY10KB095 | 14 |
| | | 460 | HK30WA530 | HD56FR463 | 15A - CLASS CC KTK | HY10KB092 | 14 |
| | | 575 | HK30WA360 | HD56FR579 | 10A - CLASS CC KTK | HY10KB090 | 14 |
| | 2.4 | 208/230 | HK30WA523 | HD56FE653 | 30A - CLASS CC KTK | HY10KB095 | 14 |
| | | 460 | HK30WA530 | HD56FE653 | 15A - CLASS CC KTK | HY10KB092 | 14 |
| | | 575 | HK30WA360 (550) HK30WB369 (580) | HD56FE577 | 10A - CLASS CC KTK | HY10KB090 | 14 |
| | 2.9 | 208/230 | HK30WA523 | HD58FE654 | 30A - CLASS CC KTK | HY10KB095 | 14 |
| | | 460 | HK30WA530 | HD58FE654 | 15A - CLASS CC KTK | HY10KB092 | 14 |
| | 3.7 | 208/230 | HK30WA523 | HD60FE656, HD58FR236 | 30A - CLASS CC KTK | HY10KB095 | 14 |
| | | 460 | HK30WA534 | HD60FE656, HD58FR236 | 20A - CLASS CC KTK | HY10KB093 | 14 |
| | | 575 | HK30WA361(550) HK30WB370(580) | HD58FE577 | 10A - CLASS CC KTK | HY10KB090 | 14 |
| | 4.9 | 208/230 | HK30WA523 | HD60FK658 | 30A - CLASS CC KTK | HY10KB095 | 14 |
| | | 460 | HK30WA532 | HD60FK658 | 30A - CLASS CC KTK | HY10KB095 | 14 |
| | | 575 | HK30WA362 | HD60FE576, HD60FL576 | 10A - CLASS CC KTK | HY10KB090 | 14 |
| 48/50TC16 50TCQ14 48/50HC14 50HCQ12 | 2.9 | 208/230 | HK30WA523 | HD58FE654 | 30A - CLASS CC KTK | HY10KB300 | 14 |
| | | 460 | HK30WA530 | HD58FE654 | 15A - CLASS CC KTK | HY10KB151 | 14 |
| | | 575 | HK30WA360 (550) HK30WB369 (580) | — | 10A - CLASS CC KTK | HY10KB101 | 14 |
| | 3.7 | 208/230 | HK30WA523 | HD60FE656, HD58FR236 | 30A - CLASS CC KTK | HY10KB300 | 14 |
| | | 460 | HK30WA534 | HD60FE656, HD58FR236 | 20A - CLASS CC KTK | HY10KB200 | 14 |
| | | 575 | HK30WA361 | HD58FE577 | 10A - CLASS CC KTK | HY10KB101 | 14 |
| | 5 | 208/230 | HK30WA524 | HD60FK657, HD60FK659 | 30A - CLASS CC KTK | HY10KB300 | 14 |
| | | 460 | HK30WA532 | HD60FK657, HD60FK659 | 30A - CLASS CC KTK | HY10KB300 | 14 |
| | | 575 | HK30WA362 (550) HK30WB371 (580) | HD60FE576, HD60FL576, HD60FK577 | 15A - CLASS CC KTK | HY10KB151 | 14 |
| 48/50TC17-30 50TCQ17-24 48/50HC17-28 | 2.9 | 208/230 | HK30WA523 | HD58FE654 | 30A - CLASS CC KTK | HY10KB300 | 10 |
| | | 460 | HK30WA530 | HD58FE654 | 15A - CLASS CC KTK | HY10KB151 | 12 |
| | | 575 | HK30WA360 (550) HK30WB369 (580) | — | 10A - CLASS CC KTK | HY10KB101 | 12 |
| | 3.7 | 208/230 | HK30WA523 | HD58FR236 | 30A - CLASS CC KTK | HY10KB300 | 10 |
| | | 460 | HK30WA534 | HD60FE656 | 20A - CLASS CC KTK | HY10KB200 | 12 |
| | | 575 | HK30WA361 | HD58FE577 | 10A - CLASS CC KTK | HY10KB101 | 12 |
| | 4.9 | 208/230 | HK30WA523 | HD60FK658 | 30A - CLASS CC KTK | HY10KB300 | 10 |
| | | 460 | HK30WA532 | HD60FK658 | 30A - CLASS CC KTK | HY10KB300 | 12 |
| | | 575 | HK30WA362 (550) HK30WB371 (580) | HD60FE576, HD60FL576 | 15A - CLASS CC KTK | HY10KB151 | 12 |
| | 5 | 208/230 | HK30WA524 | HD60FK657, HD60FK659 | 60 - CLASS J, JKS | HY10JK060 | 8 |
| | | 460 | HK30WA532 | HD60FK657, HD60FK659 | 30A - CLASS CC KTK | HY10KB300 | 12 |
| | | 575 | HK30WA362 (550) HK30WB371 (580) | HD60FE576, HD60FL576, HD60FK577 | 15A - CLASS CC KTK | HY10KB151 | 12 |
| | 7.5 | 208/230 | HK30WA524 | HD62FK654 | 60 - CLASS J, JKS | HY10JK060 | 8 |
| | | 460 | HK30WA532 | HD62FK654 | 30A - CLASS CC KTK | HY10KB300 | 12 |
| | | 575 | HK30WA362 (550) HK30WB371 (580) | HD62FL576 | 15A - CLASS CC KTK | HY10KB151 | 12 |
| | 10 | 208/230 | HK30WA525 | HD64FK654 | 60 - CLASS J, JKS | HY10JK060 | 8 |
| | | 460 | HK30WA533 | HD64FK654 | 30A - CLASS CC KTK | HY10KB300 | 12 |
| | | 575 | HK30WA363 (550) HK30WB372 (580) | HD64FL576 | 15A - CLASS CC KTK | HY10KB151 | 12 |

NOTE(S):

a. Harness wire gauge between control box and VFD.

## Table 17 — VFD Fuse Requirements, 40RU Units

| UNIT | HP | VOLTAGE | VFD (ASC320/ACH550/ACH580) | MOTOR | STANDARDIZED FUSE | FUSE P/N | HARNESS WIRE GAUGE[a] |
|---|---|---|---|---|---|---|---|
| 40RU | 1.7 | 208/230 | HK30WA523 | HD56FR233 | 30A - CLASS CC KTK | HY10KB300 | 10 |
| | | 460 | HK30WA530 | HD56FR463 | 15A - CLASS CC KTK | HY10KB151 | 10 |
| | | 575 | HK30WA360 (550)<br>HK30WB369 (580) | HD56FR579 | 10A - CLASS CC KTK | HY10KB101 | 10 |
| | 2.4 | 208/230 | HK30WA523 | HD56FE653 | 30A - CLASS CC KTK | HY10KB300 | 10 |
| | | 460 | HK30WA530 | HD56FE653 | 15A - CLASS CC KTK | HY10KB151 | 10 |
| | | 575 | HK30WA360 (550)<br>HK30WB369 (580) | HD56FE577 | 10A - CLASS CC KTK | HY10KB101 | 10 |
| | 2.9 | 208/230 | HK30WA523 | HD58FE654 | 30A - CLASS CC KTK | HY10KB300 | 10 |
| | | 460 | HK30WA530 | HD58FE654 | 30A - CLASS CC KTK | HY10KB300 | 10 |
| | 3.7 | 208/230 | HK30WA523 | HD58FR236 | 30A - CLASS CC KTK | HY10KB300 | 10 |
| | | 208/230 | HK30WA523 | HD60FE656 | 30A - CLASS CC KTK | HY10KB300 | 10 |
| | | 460 | HK30WA534 | HD58FR236 | 20A - CLASS CC KTK | HY10KB200 | 10 |
| | | 460 | HK30WA534 | HD60FE656 | 20A - CLASS CC KTK | HY10KB200 | 10 |
| | | 575 | HK30WA361(550)<br>HK30WB370(580) | HD58FE577 | 10A - CLASS CC KTK | HY10KB101 | 10 |
| | 5 | 208/230 | HK30WA524 | HD60FK659 | 30A - CLASS CC KTK | HY10KB300 | 10 |
| | | 460 | HK30WA532 | HD60FK659 | 30A - CLASS CC KTK | HY10KB300 | 10 |
| | | 575 | HK30WA362 (550)<br>HK30WB371 (580) | HD60FK577 | 15A - CLASS CC KTK | HY10KB151 | 10 |
| | 7.5 | 208/230 | HK30WA523 | HD62FK654 | 60A - CLASS J | HY10JK060 | 10 |
| | | 460 | HK30WA532 | HD62FK654 | 30A - CLASS CC KTK | HY10KB300 | 10 |
| | | 575 | HK30WA362 (550)<br>HK30WB371 (580) | HD62FL576 | 15A - CLASS CC KTK | HY10KB151 | 10 |
| | 10 | 208/230 | HK30WA525 | HD64FK654 | 60A - CLASS J | HY10JK060 | 10 |
| | | 460 | HK30WA533 | HD64FK654 | 30A - CLASS CC KTK | HY10KB300 | 10 |
| | | 575 | HK30WA363 (550)<br>HK30WB372 (580) | HD64FL576 | 15A - CLASS CC KTK | HY10KB151 | 10 |

NOTE(S):

a. Harness wire gauge between control box and VFD.

## Control and Power Wiring Diagrams

See Fig. 32-38 for examples of typical unit wiring diagrams. For details pertaining to a specific unit, see the control and power wiring diagram labels on the unit.

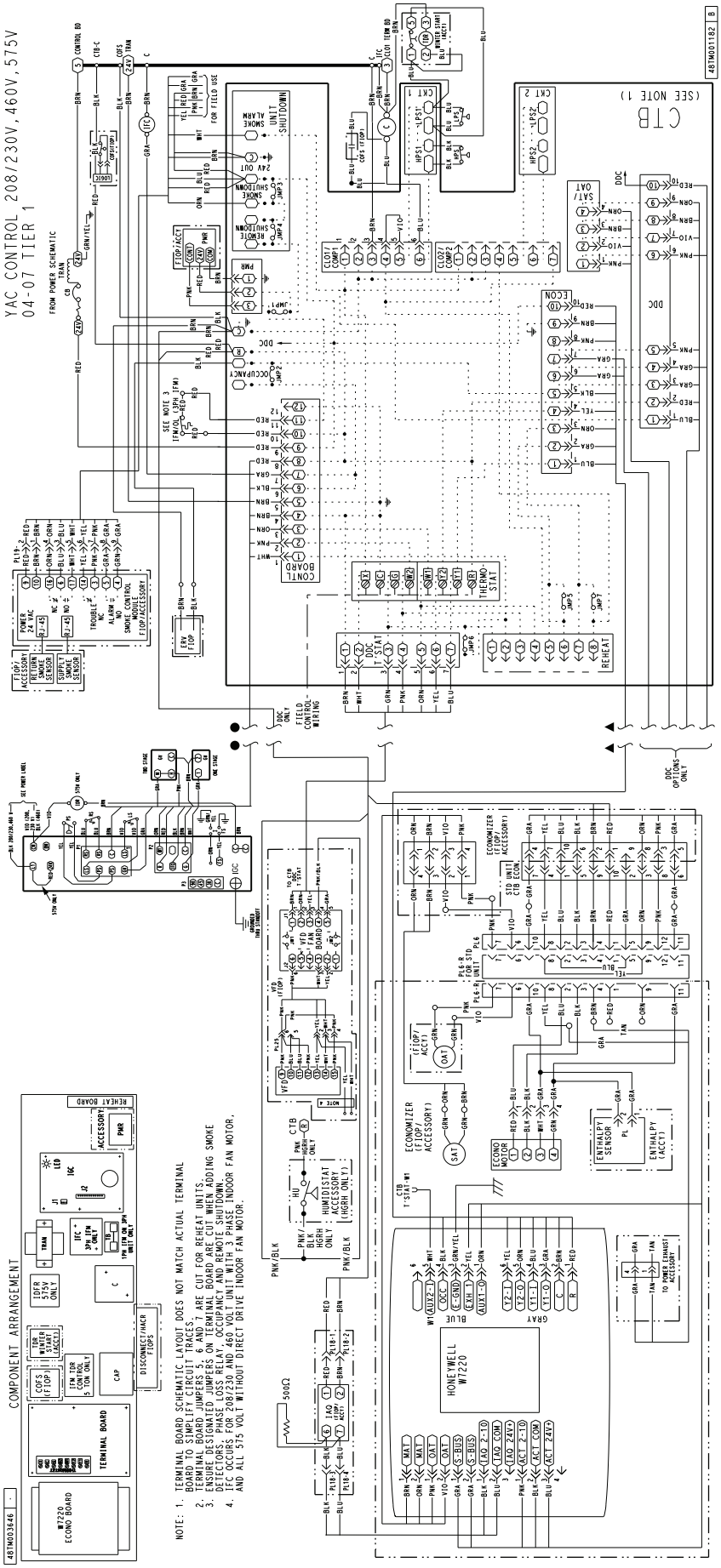


**Fig. 32 — Typical Wiring Diagram - Single Package Rooftop Unit (48TC*07 with ACS320 VFD shown)**

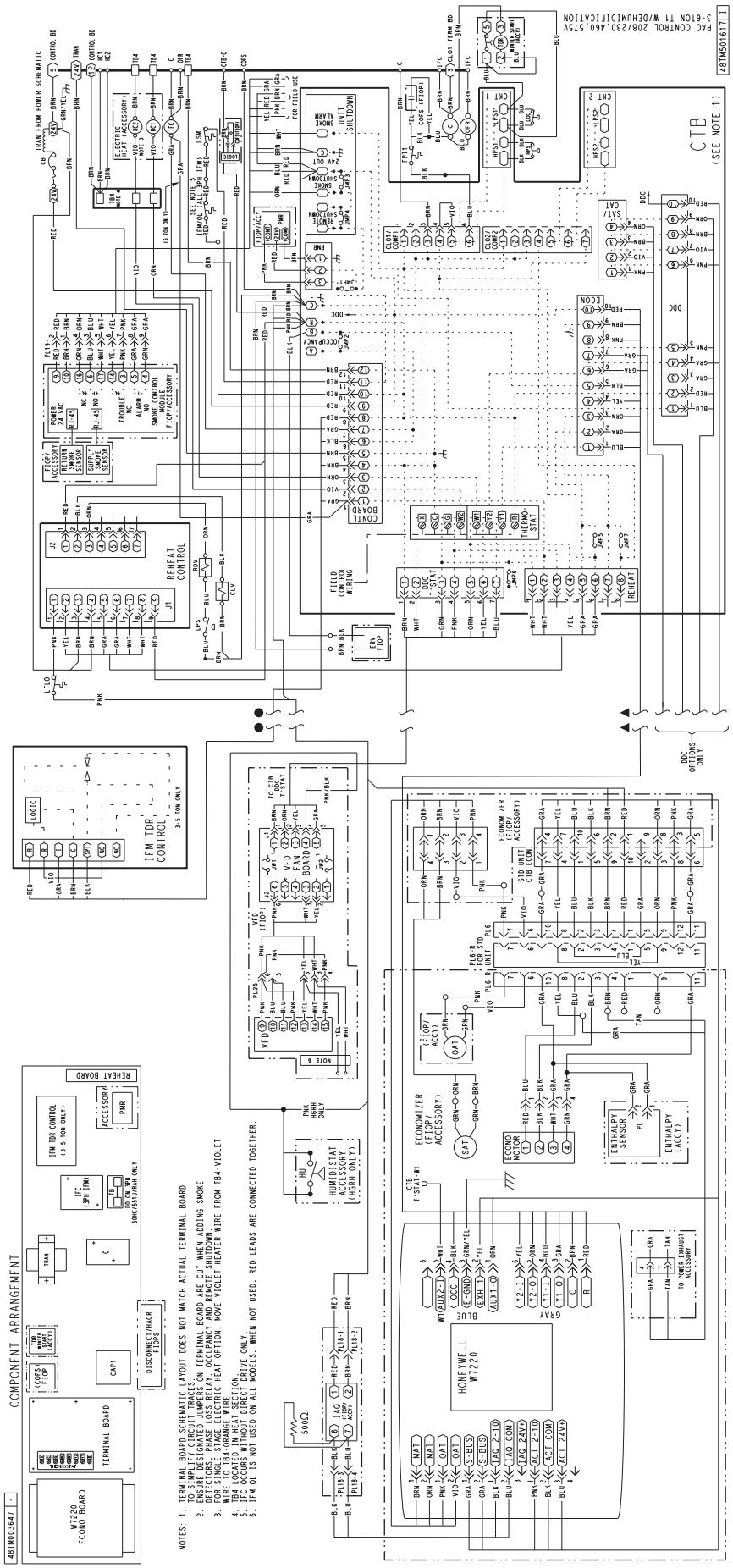


**Fig. 33 — Typical Wiring Diagram - Single Package Rooftop Unit (50TC*07 with ACS320 VFD shown)**

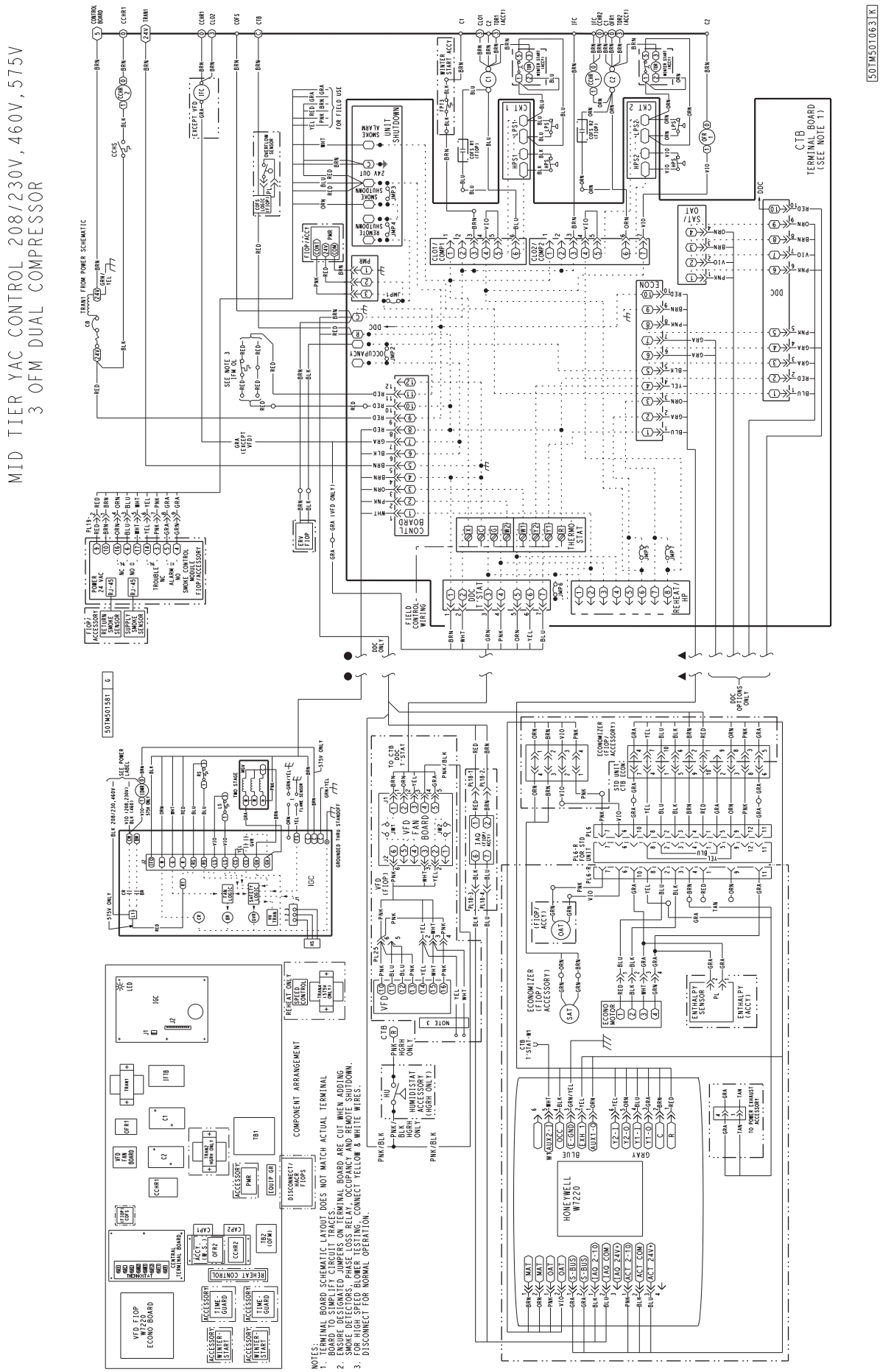


**Fig. 34 — Typical Wiring Diagram - Single Package Rooftop Unit (48HC*14 with ACH550/ACH580 VFD shown)**

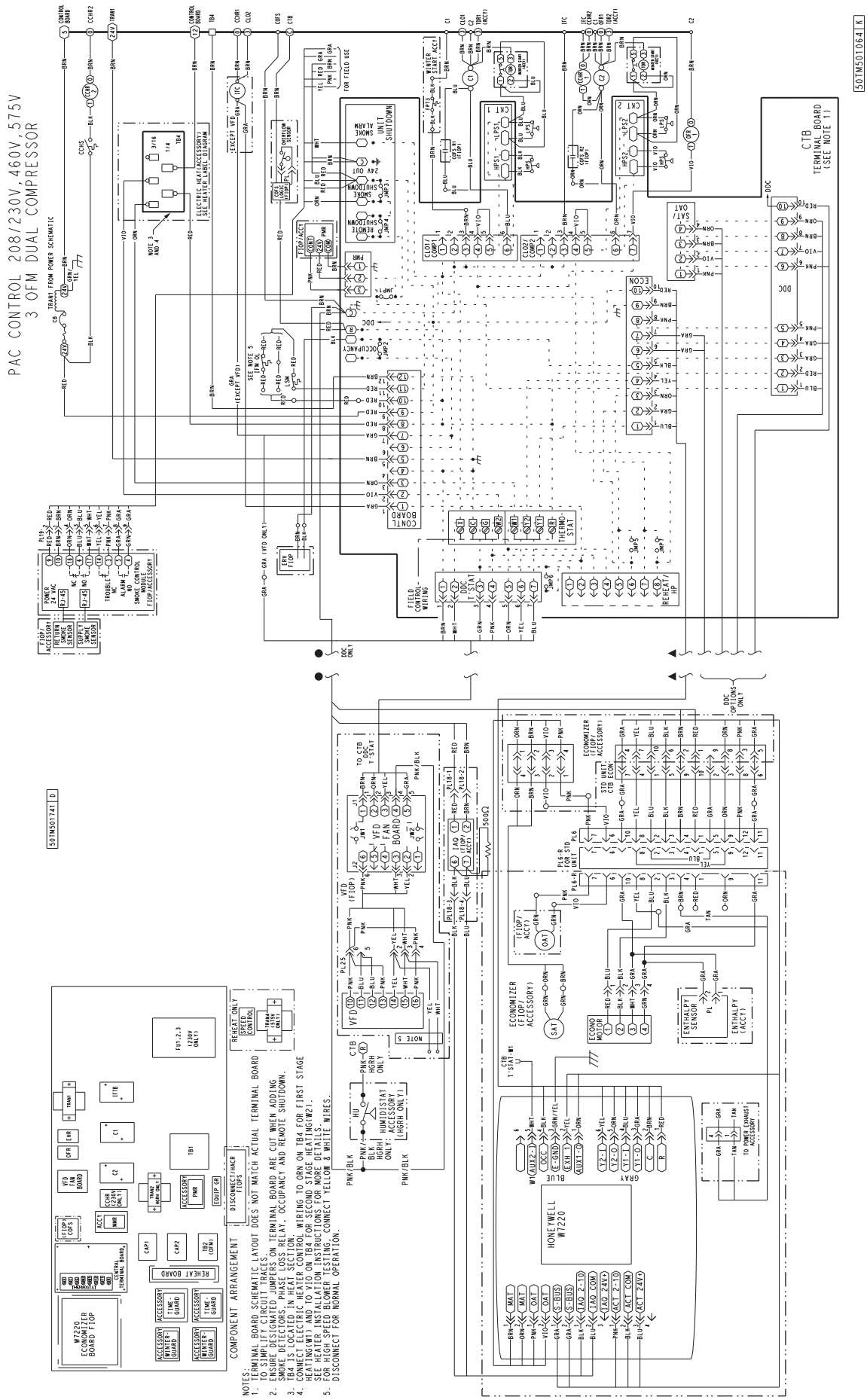


**Fig. 35 — Typical Wiring Diagram - Single Package Rooftop Unit (50HC*14 with ACH550/ACH580 VFD shown)**

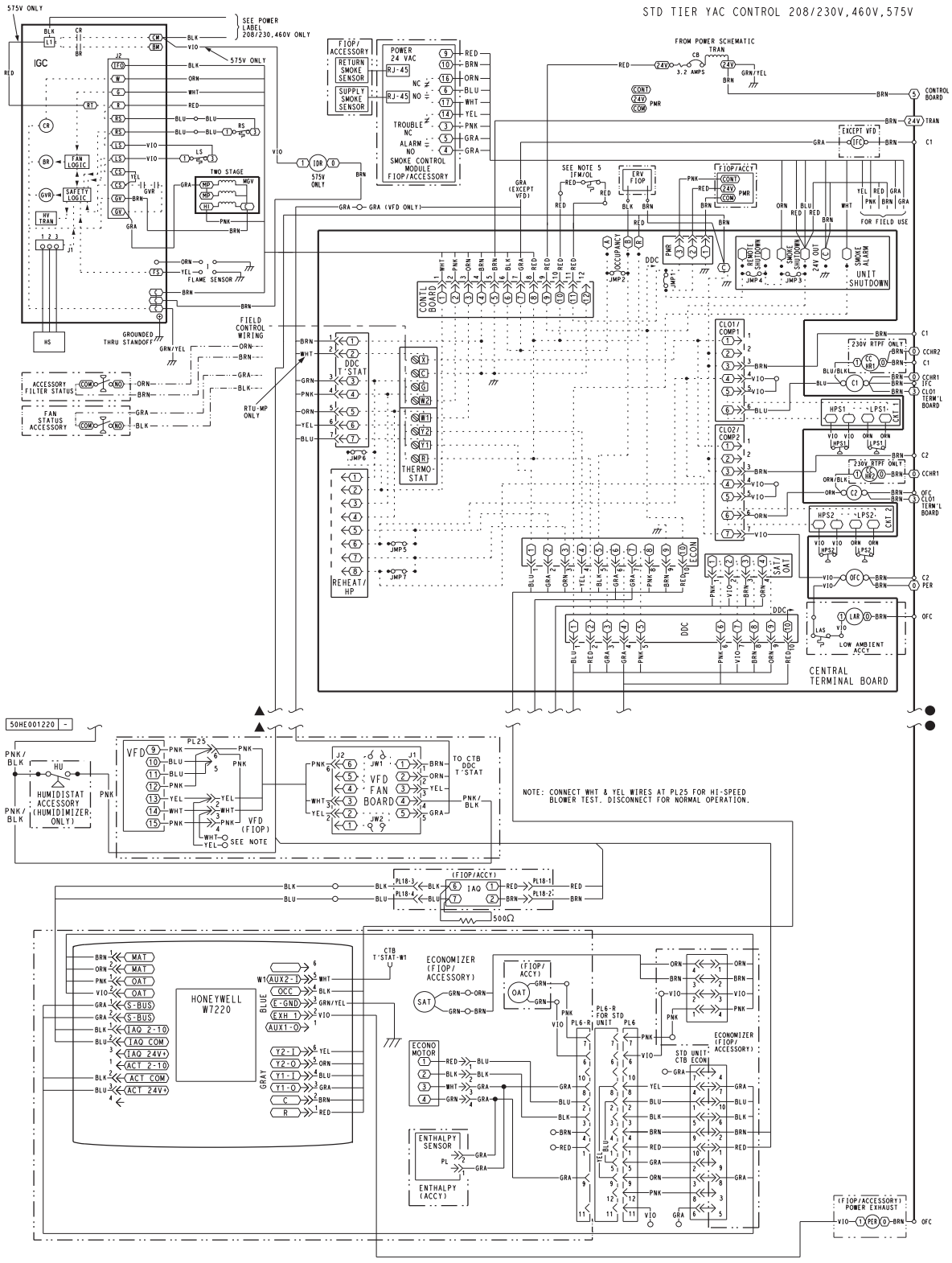


NOTES

1. IF ANY OF THE ORIGINAL WIRE FURNISHED MUST BE REPLACED, IT MUST BE REPLACED WITH TYPE 90 C WIRE OR ITS EQUIVALENT.
2. COMPRESSOR AND FAN MOTORS ARE THERMALLY PROTECTED. THREE PHASE MOTORS ARE PROTECTED AGAINST PRIMARY SINGLE PHASING CONDITIONS.
3. 208/230V UNIT TRAN IS WIRED FOR 230V UNIT. IF UNIT IS TO BE RUN WITH 208V POWER SUPPLY DISCONNECT BLK WIRE FROM 230V TAP AND CONNECT TO 200V TAP.
4. USE COPPER CONDUCTOR ONLY.
5. IFM OL IS NOT USED ON ALL MODELS. WHEN NOT USED, RED LEADS ARE CONNECTED TOGETHER.

| | |
|---|---|
| C | CONTACTOR,COMPRESSOR |
| CAP | CAPACITOR |
| CB | CIRCUIT BREAKER |
| CCH | CRANKCASE HEATER |
| CCHR | CRFANKCASE HEATER RELAY |
| CCN | CARRIER COMFORT NETWORK |
| CMP SAFE | COMPRESSOR SAFFETY |
| COFS | CONDENSATE OVERFLOW SWITCH |
| COMP | COMPRESSOR MOTOR |
| CTB | CENTRAL TERMINAL BOARD |
| DDC | DIRECT DIGITAL CONTROL |
| ERV | ENERGY RECOVERY VENTILATOR |
| FIOP | FACTORY INSTALLED OPTION |
| FSD | FIRE SHUT DOWN |
| FU | FUSE |
| GND | GROUND |
| GVR | GAS VALVE RELAY |
| HPS | HIGH PRESSURE SWITCH |
| HS | HALL EFFECT SENSOR |
| I | IGNITOR |
| IAQ | INDOOR AIR QUALITY SENSORS |
| IDM | INDUCED DRAFT MOTOR |
| IDR | INDUCED DRAFT RELAY |
| IFC | INDOOR FAN CONTACTOR |
| IFM | INDOOR FAN MOTOR |
| IGC | INTEGRATED GAS CONTROL |
| IRH | INDOOR RELATIVE HUMIDITY |
| LA | LOW AMBIENT LOCKOUT |
| LAR | LOW AMBIENT RELAY |
| LAS | LOW AMBIENT SWITCH |
| LOOP PWR | CURRENT LOOP POWER |
| LPS | LOW PRESSURE SWITCH |
| LSM | LIMIT SWITCH (MANUAL RESET) |
| MGV | MAIN GAS VALVE |
| OAQ | OUTDOOR AIR QUALITY |
| OAT | OUTDOOR AIR TEMP. SEN |
| OFC | OUTDOOR FAN CONTACTOR |
| OFM | OUTDOOR FAN MOTOR |
| OFTB | OUTDOOR FAN TERMINAL BLOCK |
| OLR | OVERLOAD RELAY |
| PER | POWER EXHAUST RELAY |
| PL | PLUG ASSEMBLY |
| POT | POTENTIOMETER |
| PMR | PHASE MONITOR RELAY |
| QT | QUADRUPLE TERMINAL |
| R | RELAY |
| RAT | RETURN AIR TEMP. SEN |
| RMT OCC | REMOTE OCCUPANCY |
| RS | ROLLOUT SWITCH |
| RTPF | ROUND TUBE PLATE FIN CONDENSER COIL |
| SAT | SUPPLY AIR TEMP. SENSOR |
| SEN | SENSOR |
| SET | SET POINT OFFSET |
| SFS | SUPPLY FAN STATUS |
| TDR | TIME DELAY RELAY |
| TRAN | TRANSFORMER |
| VFD | VARIABLE FREQUENCY DRIVE |

**Fig. 36 — Typical Wiring Diagram - Single Package Rooftop Unit (48TC*17-30 & 48HC*17-28 no Comfort Link with ACS320 VFD shown)**

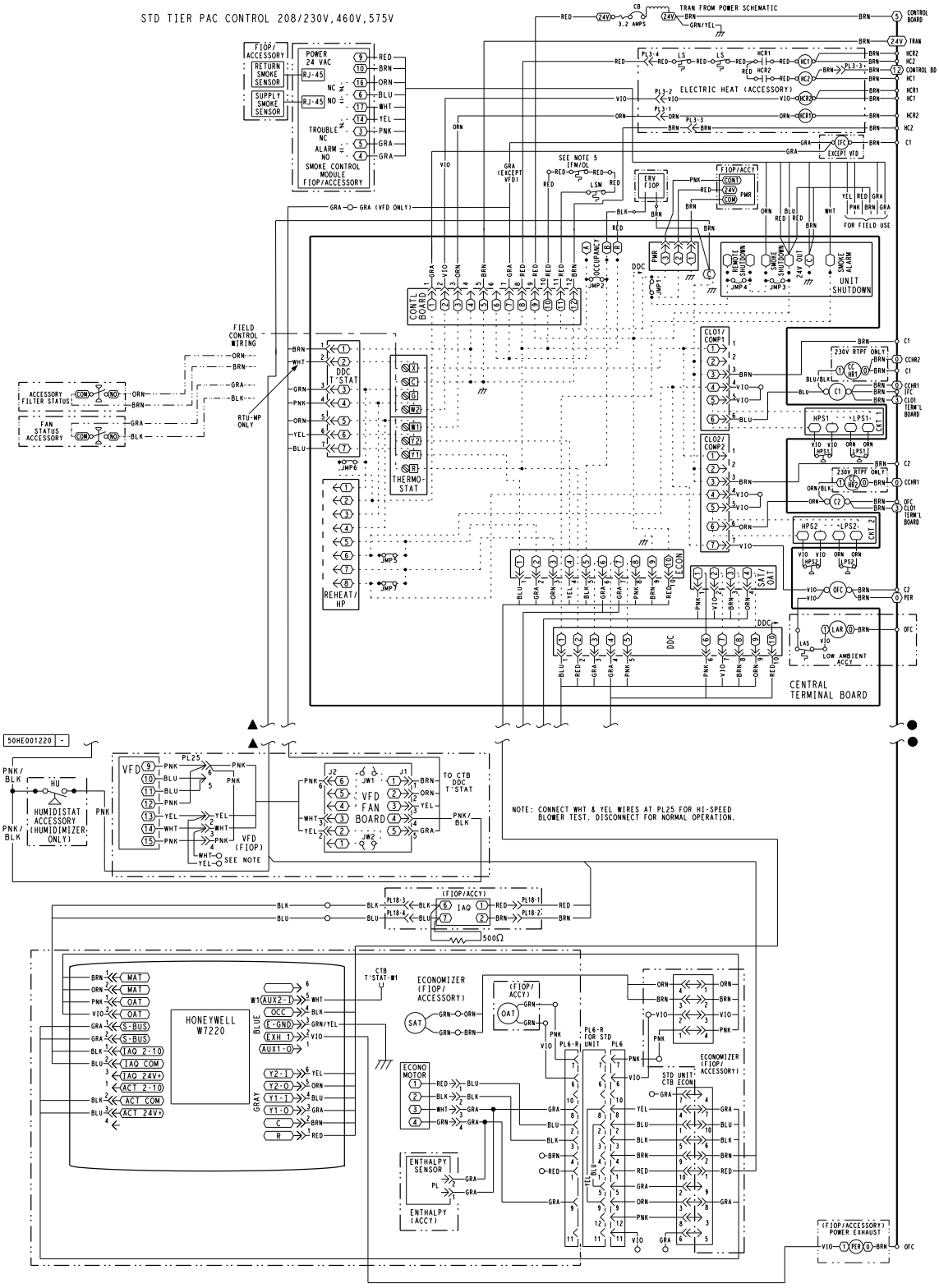


NOTES

1. IF ANY OF THE ORIGINAL WIRE FURNISHED MUST BE REPLACED, IT MUST BE REPLACED WITH TYPE 90 C WIRE OR ITS EQUIVALENT.
2. COMPRESSOR AND FAN MOTORS ARE THERMALLY PROTECTED. THREE PHASE MOTORS ARE PROTECTED AGAINST PRIMARY SINGLE PHASING CONDITIONS.
3. 208/230V UNIT TRAN IS WIRED FOR 230V UNIT. IF UNIT IS TO BE RUN WITH 208V POWER SUPPLY DISCONNECT BLK WIRE FROM 230V TAP AND CONNECT TO 200V TAP.
4. USE COPPER CONDUCTOR ONLY.
5. IFM OL IS NOT USED ON ALL MODELS. WHEN NOT USED, RED LEADS ARE CONNECTED TOGETHER.

| | |
|---|---|
| C | CONTACTOR,COMPRESSOR |
| CAP | CAPACITOR |
| CB | CIRCUIT BREAKER |
| CCH | CRANKCASE HEATER |
| CCHR | CRANKCASE HEATER RELAY |
| CCN | CARRIER COMFORT NETWORK |
| CMP SAFE | COMPRESSOR SAFFETY |
| COFS | CONDENSATE OVERFLOW SWITCH |
| COMP | COMPRESSOR MOTOR |
| CTB | CENTRAL TERMINAL BOARD |
| DDC | DIRECT DIGITAL CONTROL |
| EVR | ENERGY RECOVERY VENTILATOR |
| FIOP | FACTORY INSTALLED OPTION |
| FSD | FIRE SHUT DOWN |
| FU | FUSE |
| GR | GROUND |
| HC | HEATER CONTACTOR |
| HCR | HEATER CONTROL RELAY |
| HPS | HIGH PRESSURE SWITCH |
| IAQ | INDOOR AIR QUALITY SENSORS |
| IFC | INDOOR FAN CONTACTOR |
| IFM | INDOOR FAN MOTOR |
| IRH | INDOOR RELATIVE HUMIDITY |
| LA | LOW AMBIENT LOCKOUT |
| LAR | LOW AMBIENT RELAY |
| LAS | LOW AMBIENT SWITCH |
| LOOP PWR | CURRENT LOOP POWER |
| LPS | LOW PRESSURE SWITCH |
| LSM | LIMIT SWITCH (MANUALRESET) |
| OAQ | OUTDOOR AIR QUALITY |
| OAT | OUTDOOR AIR TEMP. SEN |
| OFC | OUTDOOR FAN CONTACTOR |
| OFM | OUTDOOR FAN MOTOR |
| OFTB | OUTDOOR FAN TERMINAL BLOCK |
| OLR | OVERLOAD RELAY |
| PER | POWER EXHAUST RELAY |
| PL | PLUG ASSEMBLY |
| POT | POTENTIOMETER |
| PMR | PHASE MONITOR RELAY |
| QT | QUADRUPLE TERMINAL |
| R | RELAY |
| RAT | RETURN AIR TEMP. SEN |
| RMT OCC | REMOTE OCCUPANCY |
| RTPF | ROUND TUBE PLATE FIN CONDENSER COIL |
| SAT | SUPPLY AIR TEMP. SENSOR |
| SEN | SENSOR |
| SET | SET POINT OFFSET |
| SFS | SUPPLY FAN STATUS |
| TDR | TIME DELAY RELAY |
| TRAN | TRANSFORMER |
| VFD | VARIABLE FREQUENCY DRIVE |

50HE500887 L

**Fig. 37 — Typical Wiring Diagram - Single Package Rooftop Unit (50TC*17-30 & 50HC*17-28 no Comfort Link with ACS320 VFD shown)**

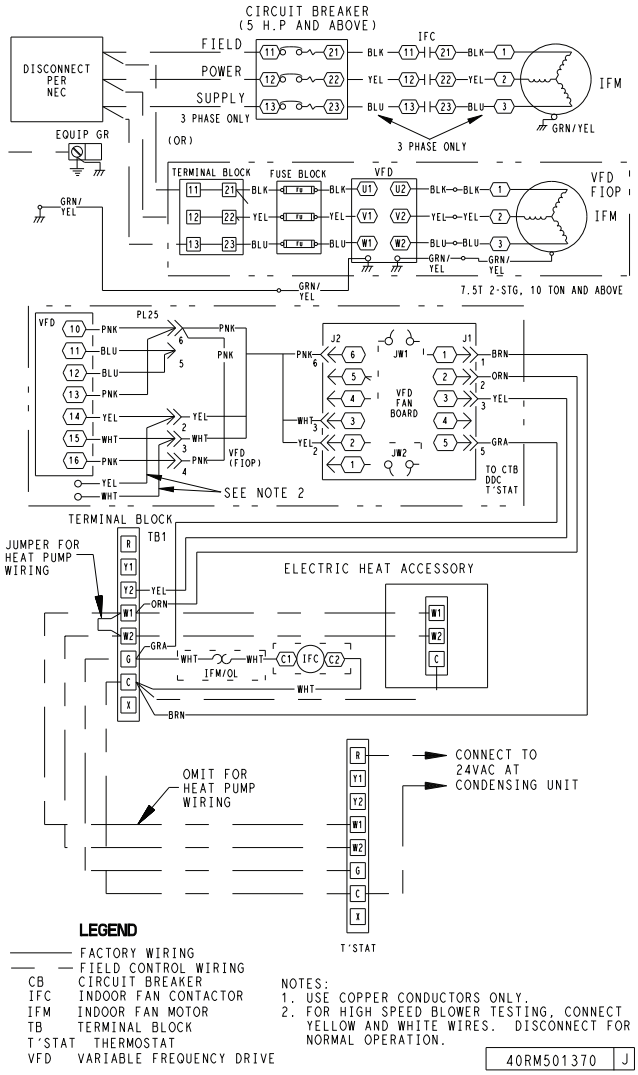


**Fig. 38 — Typical Wiring Diagram - Split System Air-Handling Unit (40RU with ACH550/ACH580 VFD shown)**

## VFD ALARMS AND FAULTS TROUBLESHOOTING

The VFD has two LEDs ACH550/ACS320 or only one LED ACH580 on its front panel that indicate VFD operating status. These LEDs are GREEN and RED.

- GREEN LED ON STEADY: Power ON to VFD
- GREEN LED FLASHING: Alarm condition detected
- RED LED ON (Steady or Flashing): Fault condition detected

### Alarms

Alarms are advisory in nature. These indicate a problem has been detected by the VFD's diagnostics, but this problem will not require that the VFD and its motor be shut down. Typical fault condition on the SAV™ application might be loose connections at the VFD terminal board or damaged conductors between the Fan Speed Board connector J2 and the VFD terminal strip. For ACH550/ACS320 units see Table 36 on page 75 for list of alarm codes. For ACH580 units see Table 37 on page 81.

CLEAR THE ALARM LED

Shut off power to the VFD for five minutes. Restore power and recheck the GREEN LED. If this LED is still flashing, connect the accessory remote display keypad kit and follow the troubleshooting instructions. For ACH550/ACS320 units see "ACH550/ACS320 VFD Diagnostics" on page 73. For ACH580 units see "ACH580 VFD Diagnostics" on page 80.

### Faults

A fault is a significant internal situation for the VFD or its motor. If the motor was running when the fault was detected, it was shutdown. For ACH550/ACS320 units see Table 35 on page 74, for ACH580 units see Table 37 on page 81. Connect the accessory remote display keypad kit and follow the troubleshooting instructions. For ACH550/ACS320 units see "ACH550/ACS320 VFD Diagnostics" on page 73. For ACH580 units see "ACH580 VFD Diagnostics" on page 80.

CLEAR THE FAULT LED

Shut off power to the VFD for five minutes. Restore power and recheck the RED LED.

## VFD MAINTENANCE

If installed in an appropriate environment, the VFD requires very little maintenance.

Table 18 lists the routine maintenance intervals recommended by Carrier.

**Table 18 — Maintenance Intervals**

| MAINTENANCE | INTERVAL |
|---|---|
| Heat sink temperature check and cleaning | Every 6 to 12 months (depending on the dustiness of the environment) |
| Remote keypad battery change | Every ten years |

## Heat Sink Cleaning

The heat sink fins accumulate dust from the cooling air. In a normal environment check the heat sink annually, in a dusty environment check more often.

Use the following procedure to clean the heat sink on AHC550 VFDs:

1. Turn off and lock out unit power.
2. Remove the drive cover (see Fig. 39).
3. Press together the retaining clips on the top cover and lift (see Fig. 40).

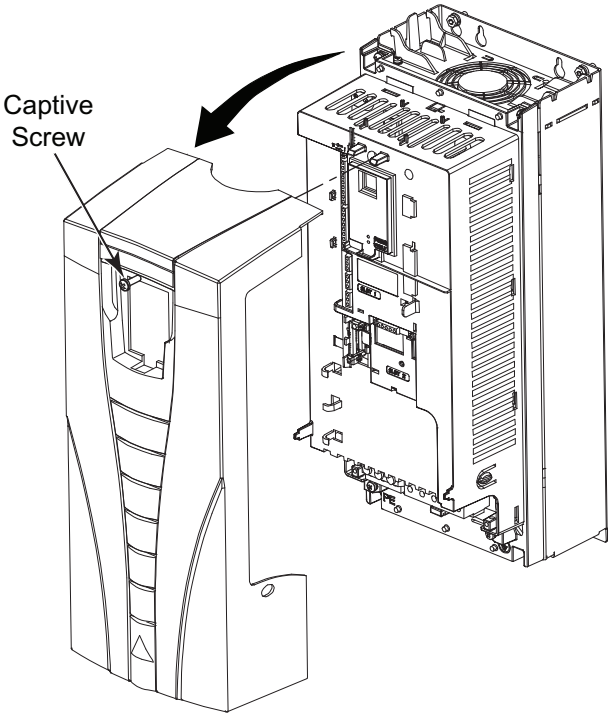


**Fig. 39 — Remove ACH550 VFD Front Cover**

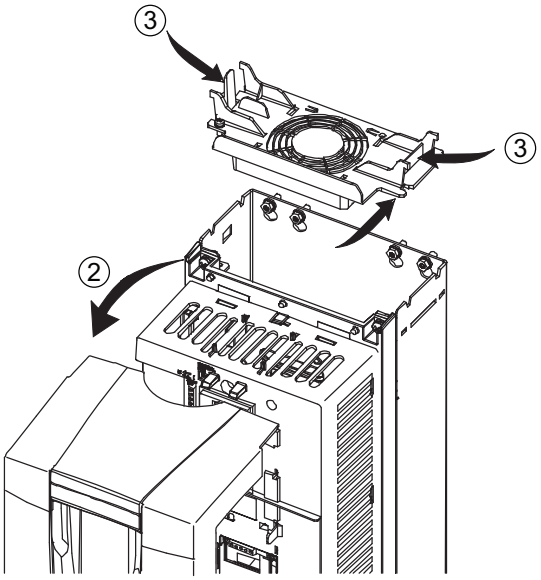


**Fig. 40 — Remove Top Cover on ACH550 VFD**

4. Blow clean compressed air (not humid) from bottom to top while simultaneously using a vacuum cleaner at the air outlet to trap the dust.
5. Replace the cooling fan.
6. Replace the drive cover.
7. Restore power.

Use the following procedure to clean the heat sink on AHC580 VFDs:

1. Turn off and lock out unit power.
2. Remove the drive cover (see Fig. 46).
3. Remove the top fan cover (see Fig. 41).
4. Blow clean compressed air (not humid) from bottom to top while simultaneously using a vacuum cleaner at the air outlet to trap the dust.
5. Replace the top fan cover.
6. Replace the drive cover.
7. Restore power.

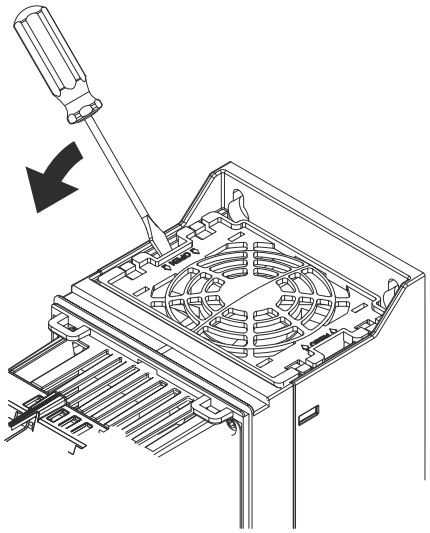

**Fig. 41 — Remove Top Cover/Fan Assembly on ACH580 VFD**

Use the following procedure to clean the heat sink on ASC320 VFDs:

1. Turn off and lock out unit power.
2. Insert a small straight blade screwdriver into the slot and press in to release the top cover as shown in Fig. 42.

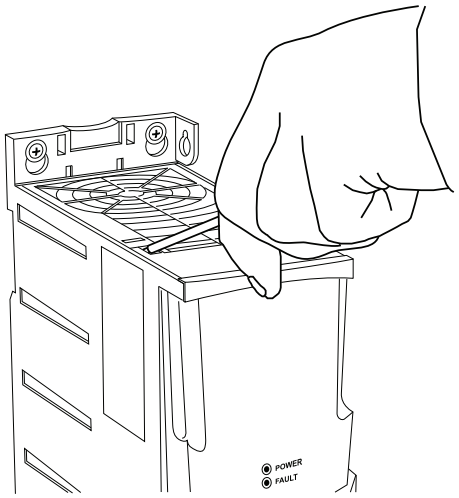


**Fig. 42 — Remove Top Cover on ACS320 VFD**

3. Blow clean compressed air (not humid) from top of ACS320 while simultaneously using a vacuum cleaner at the base to trap the dust.
4. Replace the top cover.
5. Restore power.

## Fan Replacement

The life span of the drive's cooling fan(s) depends on the drive usage and ambient temperature.

Fan failure can be predicted by the increasing noise from fan bearings and the gradual rise in the heat sink temperature in spite of heat sink cleaning. If the drive is operated in a critical part of a process, fan replacement is recommended once these symptoms start appearing. Replacement fans are available from Carrier.

ACH580 MAIN FAN REPLACEMENT

To replace the main fan for frame sizes R1 and R2, perform the following (see Fig. 43 and Fig. 44):

1. Remove power from drive. Wait for 5 minutes and then make sure by measuring that there is no voltage
2. Remove drive cover.
3. Press together the retaining clips on the fan cover and lift. Disconnect the fan cable.
4. Install the new fan by reversing Steps 2 to 4.
5. Restore power.

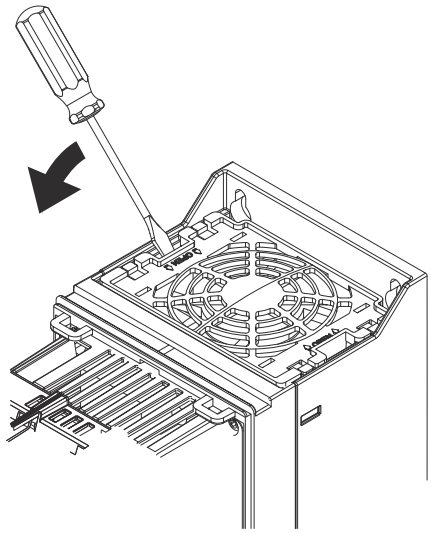

**Fig. 43 — Remove Main Fan Fingerguard**

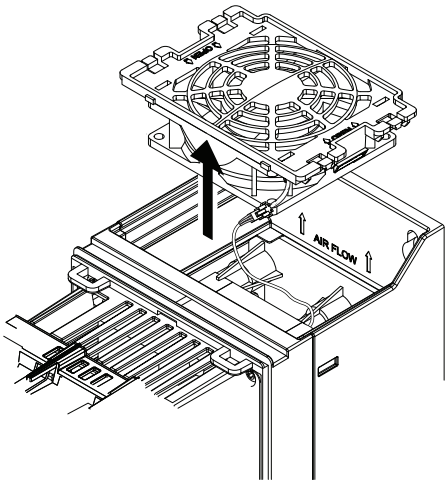


**Fig. 44 — Remove Main Fan**

ACH580 AUXILIARY COOLING FAN REPLACEMENT

To replace the internal enclosure fan for frame sizes R1 and R2 perform the following (see Fig. 45, 46, and 47):

1. Remove power from drive. Wait for 5 minutes and then make sure by measuring that there is no voltage.
2. Remove the remote keypad, if installed. See Fig. 45.
3. Remove the front cover by loosening the retaining screw. See Fig. 46.
4. Unplug fan power supply wires from the drive (see Fig. 47).
5. Remove the fingerguard: Insert a screwdriver into the hole of the fingerguard (see Fig. 47).
6. Unplug the fan power supply wires from the drive (see Fig. 47).
7. Pull off the fan.
8. Install the new fan in reverse order.

NOTE: Make sure that the arrow on the fan points to the same direction as the arrow on the drive frame.

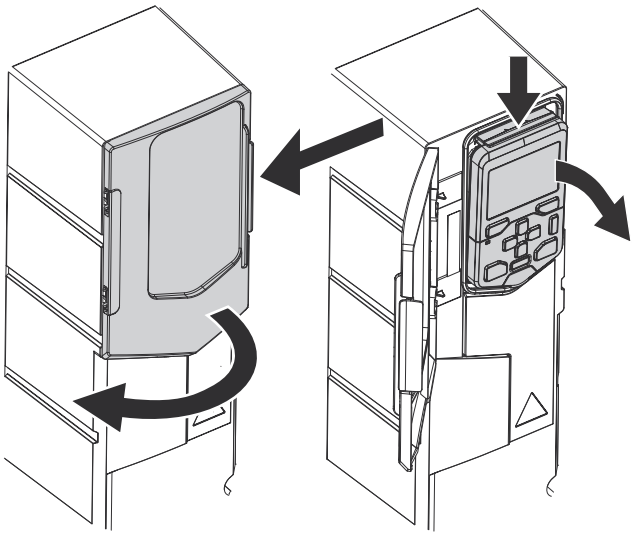

**Fig. 45 — Open Keypad Cover and Remove Keypad**

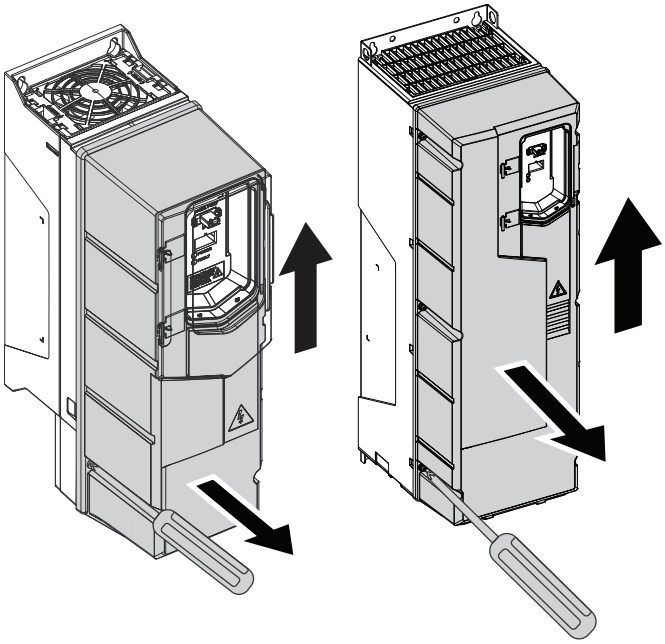

**Fig. 46 — Remove Drive Cover (R1 and R2 Frame Sizes)**

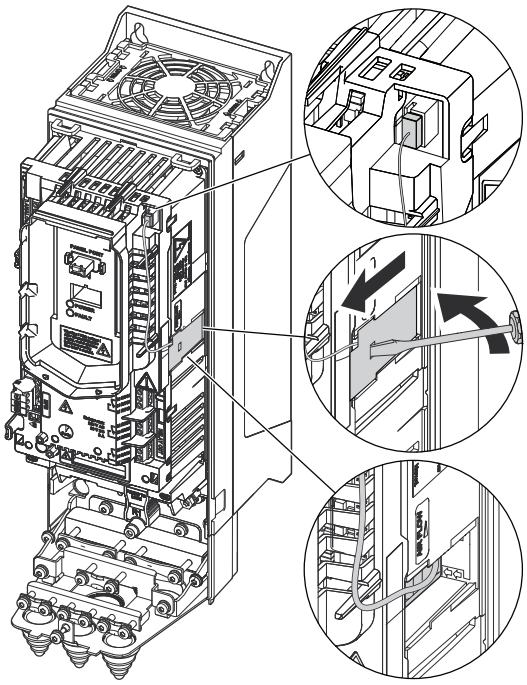

**Fig. 47 — Remove Auxiliary Fan**

ACH550 FAN REPLACEMENT

To replace the fan perform the following

1. Remove power from drive. Wait for 5 minutes and then make sure by measuring that there is no voltage
2. Remove drive cover (see See Fig. 39 — on page 31).
3. Press the lever located on the left side of the man mount and rotate the fan up and out (see Fig. 48).
4. Disconnect the fan cable (see Fig. 48).
5. Reinstall the fan in reverse order
6. Restore power.

NOTE: Make sure that the arrow on the fan points to the same direction as the arrow on the drive frame.

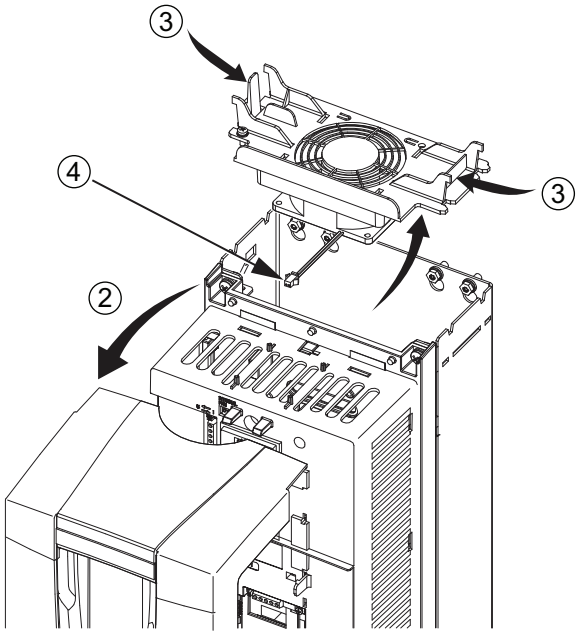


**Fig. 48 — ACH550 Fan Replacement**

ACS320 FAN REPLACEMENT

To replace the fan perform the following:

1. Remove power from drive. Wait for 5 minutes and then make sure by measuring that there is no voltage
2. Insert a small straight blade screwdriver into the slot and press in to release the top cover as shown in See Fig. 42 — on page 31.
3. Free the fan cable from the clip in the drive frame (see Fig. 49).
4. Lift the holder from the hinges (see Fig. 49).

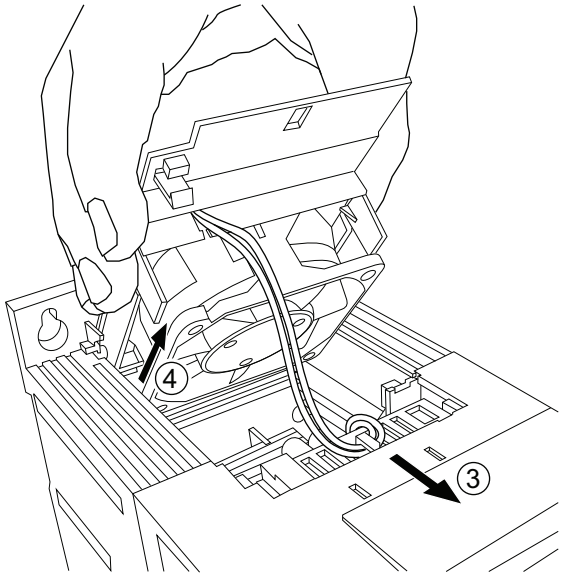


**Fig. 49 — Remove Fan Holder and Free Fan Cable**

5. Disconnect the fan cable. The fan cable connector is located on the control board that is against the front of the drive.
6. Free the fan cable from the clip in the fan holder (see Fig. 50).
7. Remove the fan from the holder (see Fig. 50).

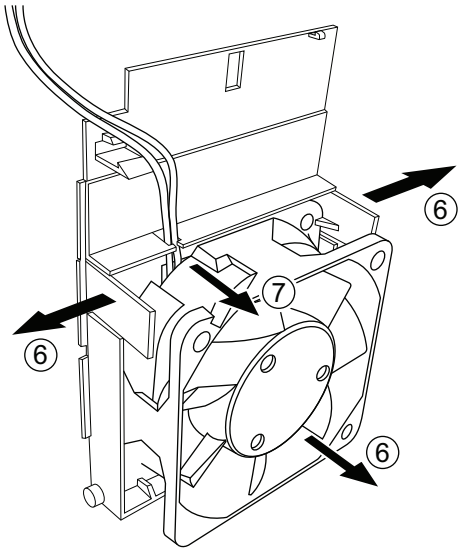


**Fig. 50 — Remove Fan from Holder**

8. Install the new fan in reverse order.
9. Restore power.

## Bypass the VFD

**⚠ WARNING**

Bypassing the VFD is not recommended. This is a temporary procedure to provide cooling or heating operation when a new VFD is required. When in this bypass mode the fire shut down will not turn off the blower and it will continue to run. The bypass should only be used for a short duration until a new VFD has been received.

The factory-installed VFD is wired and agency approved as outlined in this manual. This VFD is utilized to help provide added efficiencies and comfort during the cooling operation.

If there is an occasion where the VFD has mis-functioned and temporary cooling/operation is required, bypass the VFD as shown in Fig. 51 and 52.

To bypass ACS320 VFD on fused units – 48/50TC 07-14, 50TCQ 07-12, 48/50HC 07-12, 50HCQ 08-09, and 40RU:

1. Turn off and lock out unit power.
2. Disconnect the connector linking the fuse to the VFD.
3. Disconnect the connector between the VFD and the indoor fan motor.
4. Disconnect the ground wires at the base of the VFD.
5. Remove the VFD, if required.
6. Connect the lead from the fuse to the lead from the indoor fan motor.
7. Connect the ground wire from the indoor fan motor to the fan deck.
8. Restore power.

To bypass ACH550/580 VFD on non-fused units – 48/50TC 16-30, 50TCQ 14-24, and 48/50HC 17-28:

1. Turn off and lock out unit power.
2. Disconnect the connection between the control box and the VFD.
3. Disconnect the connection between the indoor fan motor and the VFD.
4. Disconnect the ground wires at the base of the VFD.
5. Remove the VFD, if required.
6. Connect the lead from the control box to the lead from the indoor fan motor.
7. Attach the ground wire leading from the fan motor to the fan deck.
8. Restore power.

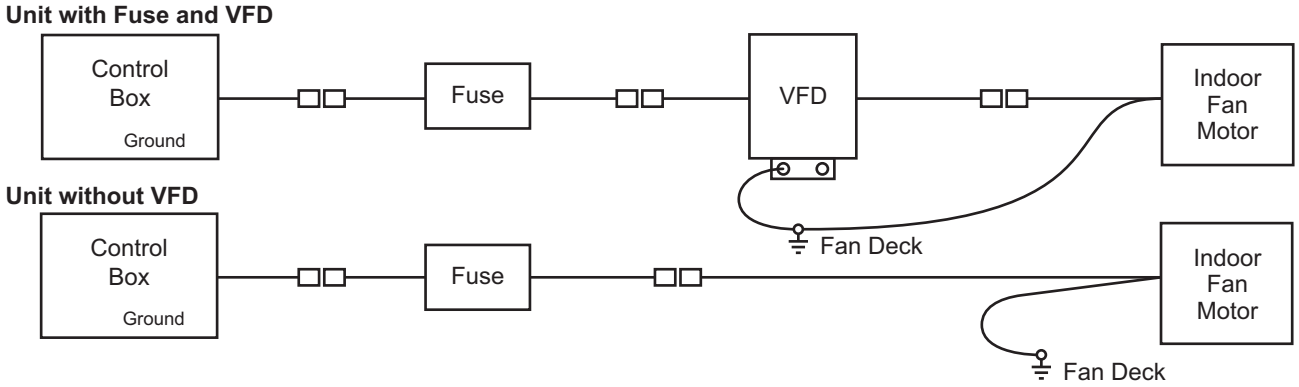


**Fig. 51 — To Bypass ACS320 VFD on Fused Units — 48/50TC 07-14, 50TCQ 07-12, 48/50HC 07-12, 50HCQ 08-09, and 40RU Units**

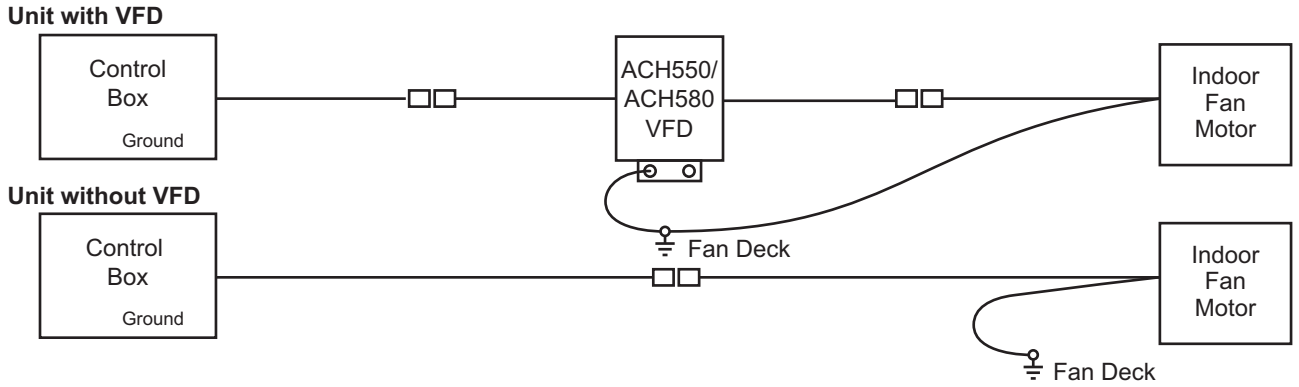


**Fig. 52 — To Bypass ACH550/580 VFD on Non-fused Units — 48/50TC 16-30, 50TCQ 14-24, and 48/50HC 17-28 Units**

## VFD PARAMETERS

The parameters for the VFDs are listed in the following tables

- Table 19 — ACS320 VFD common parameters for 48/50 units with electromechanical controls
- Table 20 — ACS320 Parameters for 48/50 units with electromechanical controls
- Table 21 — ACS320 VFD common parameters for 48/50 units with I/O Flex controls
- Table 22 — ACS320 Parameters for 48/50 units with I/O Flex controls
- Table 23 — ACS320 VFD common parameters for 40RU units with electromechanical controls
- Table 24 — ACS320 Parameters for 40RU units with electromechanical controls
- Table 25 — ACS320 VFD common parameters for 40RU units with I/O Flex controls
- Table 26 — ACS320 Parameters for 40RU units with I/O Flex controls
- Table 27 — ACH550/580 VFD common parameters for 48/50 units with electromechanical controls
- Table 28 — ACH550/580 Parameters for 48/50 units with electromechanical controls
- Table 29 — ACH550/580 common parameters for 48/50 units with I/O Flex controls
- Table 30 — ACH550/580 Parameters for 48/50 units with I/O Flex controls
- Table 31 — ACH550/580 VFD common parameters for 40RU units with I/O Flex controls
- Table 32 — ACH550/580 Parameters for 40RU units with I/O Flex controls
- Table 33 — ACH550/580 common parameters for 48/50 units with ComfortLink controls
- Table 34 — ACH550/580 Parameters for 48/50 units with ComfortLink controls

### Table 19 — ACS320 VFD Common Parameters for 48/50 Units with Electromechanical Controls

| PARAMETERS | DESCRIPTION | SETTING ACS320 |
|---|---|---|
| **9802** | COMM PROT Sel | Not Selected |
| **9907** | Motor Nominal Frequency | 60Hz |
| **1001** | EXT1 Commands | — |
| **1102** | EXT1/EXT2 Sel | — |
| **1103** | REF 1 Select | — |
| **1201** | Const Speed Sel | DI 2,3 |
| **1202** | Const Speed 1 | 40Hz |
| **1203** | Const Speed 2 | 60Hz |
| **1204** | Const Speed 3 | 60Hz |
| **1205** | Const Speed 4 | — |
| **1401** | Relay Output 1 | (16) FLT/ALARM |
| **1403** | Relay Output 3 | Not Selected |
| **1501** | AO1 Content Sel | — |
| **1601** | Run Enable | — |
| **1608** | N/A | — |
| **1611** | Parameter View | 3 |
| **2007** | Minimum Frequency | 0.0 HZ |
| **2008** | Maximum Frequency | 60HZ |
| **2101** | Start FCN | (1) Auto |
| **2102** | Stop FCN | (1) Coast |
| **2201** | ACCEL/DECEL | (0) Not Sel |
| **2202** | ACCEL | 30s |
| **2203** | DECEL | 30s |
| **2603** | IR COMP Volt | 0 volts |
| **2606** | Switching Freq | 4 HZ |
| **3102** | Trial Time | 300.0s |
| **3103** | Delay Time | 6.0s |
| **3104** | AR Overcurrent | (1) Enabled |
| **5101** | FBA Type | — |
| **5201** | Station ID | — |
| **5202** | Baud Rate | — |
| **5203** | Parity | — |
| **5301** | EFB Protocol ID | — |
| **5302** | EFB Station ID | — |
| **5303** | EFB Baud Rate | — |
| **5304** | EFB Parity | — |
| **5305** | EFB CTRL Profile | — |

LEGEND

— = HVAC Default, field does not require change.

## Table 20 — ACS320 VFD Parameters, for 48/50 Units with Electromechanical Controls

| VFD PARAMETERS | PKG ABB ACS320 | MOTOR PART NUMBER | VFD PART NUMBER | DRIVE HP | DESC |
|---|---|---|---|---|---|
| **48TM003773-DATA** | 48TM003773 | HD56FR233 | HK30WA523 | 3 | SRT 1.7 HP 230V |
| **48TM003776-DATA** | 48TM003776 | HD56FR463 | HK30WA530 | 3 | SRT 1.7 HP 460V |
| **48TM003772-DATA** | 48TM003772 | HD56FE653 | HK30WA523 | 3 | SRT 2.4 HP 230V |
| **48TM003784-DATA** | 48TM003784 | HD56FE653 | HK30WA530 | 3 | SRT 2.4 HP 460V |
| **48TM003782-DATA** | 48TM003782 | HD58FE654 | HK30WA523 | 3 | SRT 2.9 HP 230V |
| **48TM003777-DATA** | 48TM003777 | HD58FE654 | HK30WA530 | 3 | SRT 2.9 HP 460V |
| **48TM003774-DATA** | 48TM003774 | HD60FE656 | HK30WA523 | 3 | SRT 3.7 HP 230V |
| **48TM003783-DATA** | 48TM003783 | HD60FE656 | HK30WA534 | 5 | SRT 3.7 HP 460V |
| **48TM003775-DATA** | 48TM003775 | HD60FK658 | HK30WA523 | 3 | SRT 5.3 HP 230V |
| **48TM003778-DATA** | 48TM003778 | HD60FK658 | HK30WA532 | 7.5 | SRT 5.3 HP 460V |
| **50TM001206-DATA** | 50TM001206 | HD58FE654 | HK30WA523 | 3 | STR 2.9 HP 230V |
| **50TM001211-DATA** | 50TM001211 | HD58FE654 | HK30WA530 | 3 | STR 2.9 HP 460V |
| **50TM001209-DATA** | 50TM001209 | HD60FE656 | HK30WA523 | 3 | STR 3.7 HP 230V |
| **50TM001210-DATA** | 50TM001210 | HD60FE656 | HK30WA534 | 5 | STR 3.7 HP 460V |
| **50TM001208-DATA** | 50TM001208 | HD60FK657 | HK30WA524 | 7.5 | STR 5.0 HP 230V |
| **50TM001212-DATA** | 50TM001212 | HD60FK657 | HK30WA532 | 7.5 | STR 5.0 HP 460V |
| **50HE001312-DATA** | 50HE001312 | HD58FE654 | HK30WA523 | 3 | MRT 2.9 HP 230V |
| **50HE001316-DATA** | 50HE001316 | HD58FE654 | HK30WA530 | 3 | MRT 2.9 HP 460V |
| **50HE001313-DATA** | 50HE001313 | HD60FE656 | HK30WA523 | 3 | MRT 3.7 HP 230V |
| **50HE001317-DATA** | 50HE001317 | HD60FE656 | HK30WA534 | 5 | MRT 3.7 HP 460V |
| **50HE001314-DATA** | 50HE001314 | HD60FK657 | HK30WA524 | 7.5 | MRT 5.0 HP 230V |
| **50HE001318-DATA** | 50HE001318 | HD60FK657 | HK30WA532 | 7.5 | MRT 5.0 HP 460V |
| **50HE001315-DATA** | 50HE001315 | HD62FK654 | HK30WA524 | 7.5 | MRT 7.5 HP 230V |
| **50HE001319-DATA** | 50HE001319 | HD62FK654 | HK30WA532 | 7.5 | MRT 7.5 HP 460V |
| **50HE001320-DATA** | 50HE001320 | HD60FK658 | HK30WA523 | 3 | MRT 5.3 HP 230V |
| **50HE001321-DATA** | 50HE001321 | HD60FK658 | HK30WA532 | 7.5 | MRT 5.3 HP 460V |
| **50HE402586-DATA** | 50HE402586 | HD64FK654 | HK30WA525 | 10 | MRT 10.0 HP 230V |
| **50HE402591-DATA** | 50HE402591 | HD64FK654 | HK30WA533 | 10 | MRT 10.0 HP 460V |
| **50HE002320-DATA** | 50HE002320 | HD58FE654 | HK30WA523 | 3 | MRT 2.9 HP 230V |
| **50HE002324-DATA** | 50HE002324 | HD58FE654 | HK30WA530 | 3 | MRT 2.9 HP 460V |
| **50HE002321-DATA** | 50HE002321 | HD60FE656 | HK30WA523 | 3 | MRT 3.7 HP 230V |
| **50HE002325-DATA** | 50HE002325 | HD60FE656 | HK30WA534 | 5 | MRT 3.7 HP 460V |
| **50HE002322-DATA** | 50HE002322 | HD60FK657 | HK30WA524 | 7.5 | MRT 5.0 HP 230V |
| **50H4002326-DATA** | 50H4002326 | HD60FK657 | HK30WA532 | 7.5 | MRT 5.0 HP 460V |
| **50HE002323-DATA** | 50HE002323 | HD62FK654 | HK30WA524 | 7.5 | MRT 7.5 HP 230V |
| **50HE002327-DATA** | 50HE002327 | HD62FK654 | HK30WA532 | 7.5 | MRT 7.5 HP 460V |
| **50HE002331-DATA** | 50HE002331 | HD60FK658 | HK30WA523 | 3 | MRT 5.3 HP 230V |
| **50HE002333-DATA** | 50HE002333 | HD60FK658 | HK30WA532 | 7.5 | MRT 5.3 HP 460V |
| **50HE003081-DATA** | 50HE003081 | HD58FE654 | HK30WA523 | 3 | MRT 2.9 HP 230V |
| **50HE003082-DATA** | 50HE003082 | HD58FE654 | HK30WA530 | 3 | MRT 2.9 HP 460V |
| **50HE003084-DATA** | 50HE003084 | HD60FE656 | HK30WA523 | 3 | MRT 3.7 HP 230V |
| **50HE003085-DATA** | 50HE003085 | HD60FE656 | HK30WA534 | 5 | MRT 3.7 HP 460V |
| **50HE003086-DATA** | 50HE003086 | HD60FK658 | HK30WA523 | 3 | MRT 5.3 HP 230V |
| **50HE003087-DATA** | 50HE003087 | HD60FK658 | HK30WA532 | 7.5 | MRT 5.3 HP 460V |
| **50HE003089-DATA** | 50HE003089 | HD60FK657 | HK30WA524 | 7.5 | MRT 5.0 HP 230V |
| **50HE003090-DATA** | 50HE003090 | HD60FK657 | HK30WA532 | 7.5 | MRT 5.0 HP 460V |
| **50HE003092-DATA** | 50HE003092 | HD62FK654 | HK30WA524 | 7.5 | MRT 7.5 HP 230V |
| **50HE003093-DATA** | 50HE003093 | HD62FK654 | HK30WA532 | 7.5 | MRT 7.5 HP 460V |
| **48TM005163-DATA** | 48TM005163 | HD56FR233 | HK30WA523 | 3 | SRT 1.7 HP 230V |
| **48TM005166-DATA** | 48TM005166 | HD56FR463 | HK30WA530 | 3 | SRT 1.7 HP 460V |
| **48TM005162-DATA** | 48TM005162 | HD56FE653 | HK30WA523 | 3 | SRT 2.4 HP 230V |
| **48TM005174-DATA** | 48TM005174 | HD56FE653 | HK30WA530 | 3 | SRT 2.4 HP 460V |
| **48TM005164-DATA** | 48TM005164 | HD60FE656 | HK30WA523 | 3 | SRT 3.7 HP 230V |
| **48TM005173-DATA** | 48TM005173 | HD60FE656 | HK30WA534 | 5 | SRT 3.7 HP 460V |
| **48TM005165-DATA** | 48TM005165 | HD60FK658 | HK30WA523 | 3 | SRT 5.3 HP 230V |
| **48TM005168-DATA** | 48TM005168 | HD60FK658 | HK30WA532 | 7.5 | SRT 5.3 HP 460V |
| **48TM005172-DATA** | 48TM005172 | HD58FE654 | HK30WA523 | 3 | SRT 2.9 HP 230V |
| **48TM005167-DATA** | 48TM005167 | HD58FE654 | HK30WA530 | 3 | SRT 2.9 HP 460V |

## Table 20 — ACS320 VFD Parameters, for 48/50 Units with Electromechanical Controls (cont)

| LOOKUP VARIABLE | VOLTAGE | N. AMPS | N. RPM | N. HP | MAX AMPS | CROSS REFERENCE | |
|---|---|---|---|---|---|---|---|
| VFD PARAMETERS | 9905 | 9906 | 9908 | 9909 | 2003 | EM_PKG | CL_PKG |
| 48TM003773-DATA | 230 | 5.6 | 1725 | 1.7 | 5.6 | 48TM482532 | 48TM482683 |
| 48TM003776-DATA | 460 | 2.9 | 1725 | 1.7 | 2.9 | 48TM482535 | 48TM482686 |
| 48TM003772-DATA | 230 | 6.8 | 1725 | 2.4 | 6.8 | 48TM482531 | 48TM482682 |
| 48TM003784-DATA | 460 | 3.4 | 1725 | 2.4 | 3.4 | 48TM482593 | 48TM482694 |
| 48TM003782-DATA | 230 | 7.8 | 1725 | 2.9 | 7.8 | 48TM482591 | 48TM482692 |
| 48TM003777-DATA | 460 | 3.8 | 1725 | 2.9 | 3.8 | 48TM482536 | 48TM482687 |
| 48TM003774-DATA | 230 | 9.8 | 1725 | 3.7 | 9.8 | 48TM482533 | 48TM482684 |
| 48TM003783-DATA | 460 | 4.9 | 1725 | 3.7 | 4.9 | 48TM482592 | 48TM482693 |
| 48TM003775-DATA | 230 | 12.7 | 1740 | 5.3 | 12.7 | 48TM482534 | 48TM482685 |
| 48TM003778-DATA | 460 | 6.4 | 1740 | 5.3 | 6.4 | 48TM482537 | 48TM482688 |
| 50TM001206-DATA | 230 | 7.8 | 1725 | 2.9 | 7.8 | 50TM480822 | 50TM480915 |
| 50TM001211-DATA | 460 | 3.8 | 1725 | 2.9 | 3.8 | 50TM480842 | 50TM480916 |
| 50TM001209-DATA | 230 | 9.8 | 1725 | 3.7 | 9.8 | 50TM480837 | 50TM480917 |
| 50TM001210-DATA | 460 | 4.9 | 1725 | 3.7 | 4.9 | 50TM480838 | 50TM480918 |
| 50TM001208-DATA | 230 | 17.1 | 1760 | 5 | 17.1 | 50TM480824 | 50TM480921 |
| 50TM001212-DATA | 460 | 8.6 | 1760 | 5 | 8.6 | 50TM480843 | 50TM480922 |
| 50HE001312-DATA | 230 | 7.8 | 1725 | 2.9 | 7.8 | 50HE402582 | 50HE402817 |
| 50HE001316-DATA | 460 | 3.8 | 1725 | 2.9 | 3.8 | 50HE402587 | 50HE402822 |
| 50HE001313-DATA | 230 | 9.8 | 1725 | 3.7 | 9.8 | 50HE402583 | 50HE402818 |
| 50HE001317-DATA | 460 | 4.9 | 1725 | 3.7 | 4.9 | 50HE402588 | 50HE402823 |
| 50HE001314-DATA | 230 | 20.4 | 1760 | 5 | 20.4 | 50HE402584 | 50HE402819 |
| 50HE001318-DATA | 460 | 10.2 | 1760 | 5 | 10.2 | 50HE402589 | 50HE402824 |
| 50HE001315-DATA | 230 | 28.5 | 1760 | 7.5 | 28.5 | 50HE402585 | 50HE402820 |
| 50HE001319-DATA | 460 | 13.7 | 1760 | 7.5 | 13.7 | 50HE402590 | 50HE402825 |
| 50HE001320-DATA | 230 | 12.7 | 1740 | 5.3 | 12.7 | 50HE402584 | 50HE402819 |
| 50HE001321-DATA | 460 | 6.4 | 1740 | 5.3 | 6.4 | 50HE402589 | 50HE402824 |
| 50HE402586-DATA | 230 | 30.4 | 1755 | 10 | 30.4 | 50HE402586 | 50HE402821 |
| 50HE402591-DATA | 460 | 15.2 | 1755 | 10 | 15.2 | 50HE402591 | 50HE402826 |
| 50HE002320-DATA | 230 | 7.8 | 1725 | 2.9 | 7.8 | N/A | N/A |
| 50HE002324-DATA | 460 | 3.8 | 1725 | 2.9 | 3.8 | N/A | N/A |
| 50HE002321-DATA | 230 | 9.8 | 1725 | 3.7 | 9.8 | N/A | N/A |
| 50HE002325-DATA | 460 | 4.9 | 1725 | 3.7 | 4.9 | N/A | N/A |
| 50HE002322-DATA | 230 | 20.4 | 1760 | 5 | 20.4 | N/A | N/A |
| 50H4002326-DATA | 460 | 10.2 | 1760 | 5 | 10.2 | N/A | N/A |
| 50HE002323-DATA | 230 | 28.5 | 1760 | 7.5 | 28.5 | N/A | N/A |
| 50HE002327-DATA | 460 | 13.7 | 1760 | 7.5 | 13.7 | N/A | N/A |
| 50HE002331-DATA | 230 | 12.7 | 1740 | 5.3 | 12.7 | N/A | N/A |
| 50HE002333-DATA | 460 | 6.4 | 1740 | 5.3 | 6.4 | N/A | N/A |
| 50HE003081-DATA | 230 | 7.8 | 1725 | 2.9 | 7.8 | N/A | N/A |
| 50HE003082-DATA | 460 | 3.8 | 1725 | 2.9 | 3.8 | N/A | N/A |
| 50HE003084-DATA | 230 | 9.8 | 1725 | 3.7 | 9.8 | N/A | N/A |
| 50HE003085-DATA | 460 | 4.9 | 1725 | 3.7 | 4.9 | N/A | N/A |
| 50HE003086-DATA | 230 | 12.7 | 1740 | 5.3 | 12.7 | N/A | N/A |
| 50HE003087-DATA | 460 | 6.4 | 1740 | 5.3 | 6.4 | N/A | N/A |
| 50HE003089-DATA | 230 | 20.4 | 1760 | 5 | 20.4 | N/A | N/A |
| 50HE003090-DATA | 460 | 10.2 | 1760 | 5 | 10.2 | N/A | N/A |
| 50HE003092-DATA | 230 | 28.5 | 1760 | 7.5 | 28.5 | N/A | N/A |
| 50HE003093-DATA | 460 | 13.7 | 1760 | 7.5 | 13.7 | N/A | N/A |
| 48TM005163-DATA | 230 | 5.6 | 1725 | 1.7 | 5.6 | 48TM482532 | 48TM482683 |
| 48TM005166-DATA | 460 | 2.9 | 1725 | 1.7 | 2.9 | 48TM482535 | 48TM482686 |
| 48TM005162-DATA | 230 | 6.8 | 1725 | 2.4 | 6.8 | 48TM482531 | 48TM482682 |
| 48TM005174-DATA | 460 | 3.4 | 1725 | 2.4 | 3.4 | 48TM482593 | 48TM482694 |
| 48TM005164-DATA | 230 | 9.8 | 1725 | 3.7 | 9.8 | 48TM482533 | 48TM482684 |
| 48TM005173-DATA | 460 | 4.9 | 1725 | 3.7 | 4.9 | 48TM482592 | 48TM482693 |
| 48TM005165-DATA | 230 | 12.7 | 1740 | 5.3 | 12.7 | 48TM482534 | 48TM482685 |
| 48TM005168-DATA | 460 | 6.4 | 1740 | 5.3 | 6.4 | 48TM482537 | 48TM482688 |
| 48TM005172-DATA | 230 | 7.8 | 1725 | 2.9 | 7.8 | 48TM482591 | 48TM482692 |
| 48TM005167-DATA | 460 | 3.8 | 1725 | 2.9 | 3.8 | 48TM482536 | 48TM482687 |

## Table 21 — ACS320 VFD Common Parameters for 48/50 Units with I/O Flex Controls

| PARAMETERS | DESCRIPTION | SETTING ACH550 |
|---|---|---|
| **9907** | Motor Nominal Frequency | 60Hz |
| **1204** | Const Speed 3 | 60Hz |
| **1403** | Relay Output 3 | — |
| **1611** | Parameter View | 3 |
| **2007** | Minimum Frequency | 0HZ |
| **2008** | Maximum Frequency | 60HZ |
| **2101** | Start FCN | (1) Auto |
| **2201** | ACCEL/DECEL | (0) Not Sel |
| **2603** | IR COMP Volt | 0 volts |
| **2606** | Switching Freq | 4 HZ |
| **3102** | Trial Time | 300.0s |
| **3103** | Delay Time | 6.0s |
| **3104** | AR Overcurrent | (1) Enabled |
| **5101** | FBA Type | — |
| **5301** | EFB Protocol ID | — |
| **5305** | EFB CTRL Profile | — |

LEGEND

— = HVAC Default, field does not require change.

## Table 22 — ACS320 VFD Parameters, for 48/50 Units with I/O Flex Controls

| VFD PARAMETERS[a] | PKG ABB ACS320 | MOTOR PART NUMBER | VFD PART NUMBER | DRIVE HP | DESC |
|---|---|---|---|---|---|
| **48LC000507-DATA** | 48LC000507 | HD56FR233 | HK30WA504 | 1.5 | SRT 1.7 HP 230V |
| **48LC000508-DATA** | 48LC000508 | HD56FR463 | HK30WA512 | 3 | SRT 1.7 HP 460V |
| **48LC000511-DATA** | 48LC000511 | HD56FE653 | HK30WA504 | 1.5 | SRT 2.4 HP 230V |
| **48LC000512-DATA** | 48LC000512 | HD56FE653 | HK30WA512 | 3 | SRT 2.4 HP 460V |
| **48LC000514-DATA** | 48LC000514 | HD56FR233 | HK30WA504 | 1.5 | SRT 1.7 HP 230V |
| **48LC000515-DATA** | 48LC000515 | HD56FR463 | HK30WA511 | 1.5 | SRT 1.7 HP 460V |
| **48LC000517-DATA** | 48LC000517 | HD56FE653 | HK30WA517 | 5 | SRT 2.4 HP 230V |
| **48LC000519-DATA** | 48LC000519 | HD58FE654 | HK30WA512 | 3 | SRT 2.9 HP 460V |
| **48LC000521-DATA** | 48LC000521 | HD58FE654 | HK30WA505 | 2 | SRT 2.9 HP 230V |
| **48LC000522-DATA** | 48LC000522 | HD58FE654 | HK30WA512 | 3 | SRT 2.9 HP 460V |
| **48LC000524-DATA** | 48LC000524 | HD56FR233 | HK30WA504 | 1.5 | SRT 1.7 HP 230V |
| **48LC000525-DATA** | 48LC000525 | HD56FR463 | HK30WA511 | 1.5 | STR 1.7 HP 460V |
| **48LC000527-DATA** | 48LC000527 | HD58FE654 | HK30WA505 | 2 | STR 2.9 HP 230V |
| **48LC000528-DATA** | 48LC000528 | HD58FE654 | HK30WA512 | 3 | SRT 2.9 HP 460V |
| **48LC000530-DATA** | 48LC000530 | HD56FR233 | HK30WA504 | 1.5 | STR 1.7 HP 230V |
| **48LC000531-DATA** | 48LC000531 | HD56FR463 | HK30WA513 | 3 | STR 1.7 HP 460V |
| **48LC000536-DATA** | 48LC000536 | HD56FE653 | HK30WA512 | 3 | MRT 2.4 HP 460V |
| **48LC000662-DATA** | 48LC000662 | HD56FR463 | HK30WA512 | 3 | MRT 1.7 HP 460V |
| **48LC000535-DATA** | 48LC000535 | HD56FE653 | HK30WA512 | 3 | MRT 2.4 HP 230V |
| **48LC000539-DATA** | 48LC000539 | HD60FK658 | HK30WA506 | 3 | MRT 4.9 HP 230V |
| **48LC000663-DATA** | 48LC000663 | HD56FE653 | HK30WA512 | 3 | MRT 2.4 HP 460V |
| **48LC000543-DATA** | 48LC000543 | HD58FE654 | HK30WA512 | 3 | MRT 2.9 HP 460V |
| **48LC000540-DATA** | 48LC000540 | HD60FK658 | HK30WA513 | 3 | MRT 4.9 HP 460V |
| **48LC000542-DATA** | 48LC000542 | HD58FE654 | HK30WA505 | 2 | MRT 2.9 HP 230V |
| **48LC000546-DATA** | 48LC000546 | HD60FE656 | HK30WA512 | 3 | MRT 3.7 HP 460V |
| **48LC000545-DATA** | 48LC000545 | HD60FE656 | HK30WA505 | 2 | MRT 3.7 HP 230V |
| **48LC000661-DATA** | 48LC000661 | HD56FR463 | HK30WA512 | 3 | MRT 1.7 HP 460V |
| **48LC000547-DATA** | 48LC000547 | HD58FE654 | HK30WA505 | 2 | MRT 2.9 HP 230V |
| **48LC000548-DATA** | 48LC000548 | HD58FE654 | HK30WA512 | 3 | MRT 2.9 HP 460V |
| **48LC000550-DATA** | 48LC000550 | HD60FK658 | HK30WA506 | 3 | MRT 5.25 HP 230V |
| **48LC000551-DATA** | 48LC000551 | HD60FK658 | HK30WA513 | 3 | MRT 5.25 HP 460V |
| **48LC000553-DATA** | 48LC000553 | HD60FK657 | HK30WA507 | 7.5 | MRT 5 HP 230V |
| **48LC000554-DATA** | 48LC000554 | HD60FK657 | HK30WA514 | 7.5 | MRT 5 HP 460V |
| **48LC000556-DATA** | 48LC000556 | HD62FK654 | HK30WA508 | 10 | MRT 7.5 HP 230V |
| **48LC000557-DATA** | 48LC000557 | HD62FK654 | HK30WA515 | 10 | MRT 7.5 HP 460V |
| **48LC000559-DATA** | 48LC000559 | HD64FK654 | HK30WA535 | 15 | MRT 10 HP 230V |
| **48LC000560-DATA** | 48LC000560 | HD64FK654 | HK30WA536 | 30.9 | MRT 10 HP 460V |
| **48LC000562-DATA** | 48LC000562 | HD60FK657 | HK30WA507 | 7.5 | MRT 5 HP 230V |
| **48LC000563-DATA** | 48LC000563 | HD60FK657 | HK30WA514 | 7.5 | MRT 5 HP 460V |
| **48LC000565-DATA** | 48LC000565 | HD62FK654 | HK30WA508 | 10 | MRT 7.5 HP 230V |
| **48LC000566-DATA** | 48LC000566 | HD62FK654 | HK30WA515 | 10 | MRT 7.5 HP 460V |
| **48LC000568-DATA** | 48LC000568 | HD58FE654 | HK30WA505 | 2 | MRT 2.9 HP 230V |
| **48LC000569-DATA** | 48LC000569 | HD58FE654 | HK30WA512 | 3 | MRT 2.9 HP 460V |
| **48LC000571-DATA** | 48LC000571 | HD60FK657 | HK30WA507 | 7.5 | MRT 5 HP 230V |
| **48LC000572-DATA** | 48LC000572 | HD60FK657 | HK30WA514 | 7.5 | MRT 5 HP 460V |
| **48LC000574-DATA** | 48LC000574 | HD62FK654 | HK30WA508 | 10 | SRT 7.5 HP 230V |
| **48LC000575-DATA** | 48LC000575 | HD62FK654 | HK30WA515 | 10 | STR 7.5 HP 460V |
| **48LC000577-DATA** | 48LC000577 | HD64FK654 | HK30WA535 | 15 | MRT 10 HP 230V |
| **48LC000578-DATA** | 48LC000578 | HD64FK654 | HK30WA536 | 30.9 | MRT 10 HP 460V |
| **48LC000580-DATA** | 48LC000580 | HD58FE654 | HK30WA505 | 2 | MRT 2.9 HP 230V |
| **48LC000581-DATA** | 48LC000581 | HD58FE654 | HK30WA512 | 3 | MRT 2.9 HP 460V |
| **48LC000583-DATA** | 48LC000583 | HD64FK654 | HK30WA535 | 15 | MRT 10 HP 230V |
| **48LC000584-DATA** | 48LC000584 | HD64FK654 | HK30WA536 | 30.9 | MRT 10 HP 460V |
| **48LC000586-DATA** | 48LC000586 | HD60FK657 | HK30WA507 | 7.5 | STR 5 HP 230V |
| **48LC000587-DATA** | 48LC000587 | HD60FK657 | HK30WA514 | 7.5 | STR 5 HP 460V |
| **48LC000589-DATA** | 48LC000589 | HD62FK654 | HK30WA508 | 10 | STR 7.5 HP 230V |
| **48LC000590-DATA** | 48LC000590 | HD62FK654 | HK30WA515 | 10 | MRT 7.5 HP 460V |
| **48LC000592-DATA** | 48LC000592 | HD64FK654 | HK30WA535 | 15 | MRT 10 HP 230V |
| **48LC000593-DATA** | 48LC000593 | HD64FK654 | HK30WA536 | 30.9 | MRT 10 HP 460V |
| **48LC000595-DATA** | 48LC000595 | HD60FK657 | HK30WA507 | 7.5 | MRT 5 HP 230V |
| **48LC000596-DATA** | 48LC000596 | HD60FK657 | HK30WA514 | 7.5 | MRT 5 HP 460V |
| **48LC000598-DATA** | 48LC000598 | HD62FK654 | HK30WA508 | 10 | MRT 7.5 HP 230V |
| **48LC000599-DATA** | 48LC000599 | HD62FK654 | HK30WA515 | 10 | MRT 7.5 HP 460V |
| **48LC000601-DATA** | 48LC000601 | HD58FE654 | HK30WA505 | 2 | MRT 2.9 HP 230V |
| **48LC000602-DATA** | 48LC000602 | HD58FE654 | HK30WA512 | 3 | MRT 2.9 HP 460V |

NOTE(S):

a. VFD Parameters 48LC000604-DATA thru 48TM005167-DATA begin on page 43.

## Table 22 — ACS320 VFD Parameters, for 48/50 Units with I/O Flex Controls (cont)

| LOOKUP VARIABLE | VOLTAGE | N. AMPS | N. RPM | N. HP | EXT1 COMMANDS | EXT1/EXT2 SEL | REF1 SELECT | CONST SPEED SEL | CONST SPEED 1 | CONST SPEED 2 |
|---|---|---|---|---|---|---|---|---|---|---|
| **VFD PARAMETERS** | **9905** | **9906** | **9908** | **9909** | **1001** | **1102** | **1103** | **1201** | **1202** | **1203** |
| **48LC000507-DATA** | 230 | 5.6 | 1725 | 1.7 | (1) DI1 | EXT1 | AI-1 | NOT SEL | 52.4 | 60Hz |
| **48LC000508-DATA** | 460 | 2.9 | 1725 | 1.7 | (1) DI1 | EXT1 | AI-1 | NOT SEL | 52.4 | 60Hz |
| **48LC000511-DATA** | 230 | 6.8 | 1725 | 2.4 | (1) DI1 | EXT1 | AI-1 | NOT SEL | 52.4 | 60Hz |
| **48LC000512-DATA** | 460 | 3.4 | 1725 | 2.4 | (1) DI1 | EXT1 | AI-1 | NOT SEL | 52.4 | 60Hz |
| **48LC000514-DATA** | 230 | 5.6 | 1725 | 1.7 | (1) DI1 | EXT1 | AI-1 | NOT SEL | 42.6 | 60Hz |
| **48LC000515-DATA** | 460 | 2.9 | 1725 | 1.7 | (1) DI1 | EXT1 | AI-1 | NOT SEL | 42.6 | 60Hz |
| **48LC000517-DATA** | 230 | 6.8 | 1725 | 2.4 | (1) DI1 | EXT1 | AI-1 | NOT SEL | 42.6 | 60Hz |
| **48LC000519-DATA** | 460 | 3.8 | 1725 | 2.9 | (1) DI1 | EXT1 | AI-1 | NOT SEL | 42.6 | 60Hz |
| **48LC000521-DATA** | 230 | 7.8 | 1725 | 2.9 | (1) DI1 | EXT1 | AI-1 | NOT SEL | 41.2 | 60Hz |
| **48LC000522-DATA** | 460 | 3.8 | 1725 | 2.9 | (1) DI1 | EXT1 | AI-1 | NOT SEL | 41.2 | 60Hz |
| **48LC000524-DATA** | 230 | 5.6 | 1695 | 1.7 | (1) DI1 | EXT1 | AI-1 | NOT SEL | 39.9Hz | 39.9Hz |
| **48LC000525-DATA** | 460 | 2.9 | 1690 | 1.7 | (1) DI1 | EXT1 | AI-1 | NOT SEL | 39.9Hz | 39.9Hz |
| **48LC000527-DATA** | 230 | 7.8 | 1735 | 2.9 | (1) DI1 | EXT1 | AI-1 | NOT SEL | 39.9Hz | 39.9Hz |
| **48LC000528-DATA** | 460 | 3.8 | 1735 | 2.9 | (1) DI1 | EXT1 | AI-1 | NOT SEL | 39.9Hz | 39.9Hz |
| **48LC000530-DATA** | 230 | 5.6 | 1695 | 1.7 | (1) DI1 | EXT1 | AI-1 | NOT SEL | 39.9Hz | 39.9Hz |
| **48LC000531-DATA** | 460 | 2.9 | 1690 | 1.7 | (1) DI1 | EXT1 | AI-1 | NOT SEL | 39.9Hz | 39.9Hz |
| **48LC000536-DATA** | 460 | 3.4 | 1680 | 2.4 | (1) DI1 | EXT1 | AI-1 | NOT SEL | 39.9Hz | 39.9Hz |
| **48LC000662-DATA** | 460 | 2.9 | 1690 | 1.7 | (1) DI1 | EXT1 | AI-1 | NOT SEL | 39.9Hz | 39.9Hz |
| **48LC000535-DATA** | 230 | 6.8 | 1680 | 2.4 | (1) DI1 | EXT1 | AI-1 | NOT SEL | 39.9Hz | 39.9Hz |
| **48LC000539-DATA** | 230 | 12.7 | 1745 | 4.9 | (1) DI1 | EXT1 | AI-1 | NOT SEL | 39.9Hz | 39.9Hz |
| **48LC000663-DATA** | 460 | 3.4 | 1680 | 2.4 | (1) DI1 | EXT1 | AI-1 | NOT SEL | 39.9Hz | 39.9Hz |
| **48LC000543-DATA** | 460 | 3.8 | 1735 | 2.9 | (1) DI1 | EXT1 | AI-1 | NOT SEL | 39.9Hz | 39.9Hz |
| **48LC000540-DATA** | 460 | 6.4 | 1745 | 4.9 | (1) DI1 | EXT1 | AI-1 | NOT SEL | 39.9Hz | 39.9Hz |
| **48LC000542-DATA** | 230 | 7.8 | 1735 | 2.9 | (1) DI1 | EXT1 | AI-1 | NOT SEL | 39.9Hz | 39.9Hz |
| **48LC000546-DATA** | 460 | 4.9 | 1750 | 3.7 | (1) DI1 | EXT1 | AI-1 | NOT SEL | 39.9Hz | 39.9Hz |
| **48LC000545-DATA** | 230 | 9.8 | 1750 | 3.7 | (1) DI1 | EXT1 | AI-1 | NOT SEL | 39.9Hz | 39.9Hz |
| **48LC000661-DATA** | 460 | 2.9 | 1690 | 1.7 | (1) DI1 | EXT1 | AI-1 | NOT SEL | 39.9Hz | 39.9Hz |
| **48LC000547-DATA** | 230 | 7.8 | 1735 | 2.9 | (1) DI1 | EXT1 | AI-1 | NOT SEL | 32.1Hz | 47.7Hz |
| **48LC000548-DATA** | 460 | 3.8 | 1735 | 2.9 | (1) DI1 | EXT1 | AI-1 | NOT SEL | 32.1Hz | 47.7Hz |
| **48LC000550-DATA** | 230 | 12.7 | 1745 | 5.25 | (1) DI1 | EXT1 | AI-1 | NOT SEL | 32.1Hz | 47.7Hz |
| **48LC000551-DATA** | 460 | 6.4 | 1745 | 5.25 | (1) DI1 | EXT1 | AI-1 | NOT SEL | 32.1Hz | 47.7Hz |
| **48LC000553-DATA** | 230 | 20.4 | 1760 | 5 | (1) DI1 | EXT1 | AI-1 | NOT SEL | 31.5Hz | 37Hz |
| **48LC000554-DATA** | 460 | 10.2 | 1760 | 5 | (1) DI1 | EXT1 | AI-1 | NOT SEL | 31.5Hz | 37Hz |
| **48LC000556-DATA** | 230 | 28.5 | 1760 | 7.5 | (1) DI1 | EXT1 | AI-1 | NOT SEL | 31.5Hz | 37Hz |
| **48LC000557-DATA** | 460 | 14.3 | 1760 | 7.5 | (1) DI1 | EXT1 | AI-1 | NOT SEL | 31.5Hz | 37Hz |
| **48LC000559-DATA** | 230 | 30.4 | 1755 | 10 | (1) DI1 | EXT1 | AI-1 | NOT SEL | 31.4Hz | 38.7Hz |
| **48LC000560-DATA** | 460 | 15.2 | 1755 | 10 | (1) DI1 | EXT1 | AI-1 | NOT SEL | 31.4Hz | 38.7Hz |
| **48LC000562-DATA** | 230 | 20.4 | 1760 | 5 | (1) DI1 | EXT1 | AI-1 | NOT SEL | 32.1Hz | 47.7Hz |
| **48LC000563-DATA** | 460 | 10.2 | 1760 | 5 | (1) DI1 | EXT1 | AI-1 | NOT SEL | 32.1Hz | 47.7Hz |
| **48LC000565-DATA** | 230 | 28.5 | 1760 | 7.5 | (1) DI1 | EXT1 | AI-1 | NOT SEL | 32.1Hz | 47.7Hz |
| **48LC000566-DATA** | 460 | 14.3 | 1760 | 7.5 | (1) DI1 | EXT1 | AI-1 | NOT SEL | 32.1Hz | 47.7Hz |
| **48LC000568-DATA** | 230 | 7.8 | 1735 | 2.9 | (1) DI1 | EXT1 | AI-1 | NOT SEL | 34Hz | 49.4Hz |
| **48LC000569-DATA** | 460 | 3.8 | 1735 | 2.9 | (1) DI1 | EXT1 | AI-1 | NOT SEL | 34Hz | 49.4Hz |
| **48LC000571-DATA** | 230 | 20.4 | 1760 | 5 | (1) DI1 | EXT1 | AI-1 | NOT SEL | 34Hz | 49.4Hz |
| **48LC000572-DATA** | 460 | 10.2 | 1760 | 5 | (1) DI1 | EXT1 | AI-1 | NOT SEL | 34Hz | 49.4Hz |
| **48LC000574-DATA** | 230 | 28.5 | 1760 | 7.5 | (1) DI1 | EXT1 | AI-1 | NOT SEL | 34Hz | 49.4Hz |
| **48LC000575-DATA** | 460 | 14.3 | 1760 | 7.5 | (1) DI1 | EXT1 | AI-1 | NOT SEL | 34Hz | 49.4Hz |
| **48LC000577-DATA** | 230 | 30.4 | 1755 | 10 | (1) DI1 | EXT1 | AI-1 | NOT SEL | 34Hz | 49.4Hz |
| **48LC000578-DATA** | 460 | 15.2 | 1755 | 10 | (1) DI1 | EXT1 | AI-1 | NOT SEL | 34Hz | 49.4Hz |
| **48LC000580-DATA** | 230 | 7.8 | 1750 | 2.9 | (1) DI1 | EXT1 | AI-1 | NOT SEL | 31.5Hz | 37Hz |
| **48LC000581-DATA** | 460 | 3.8 | 1750 | 2.9 | (1) DI1 | EXT1 | AI-1 | NOT SEL | 31.5Hz | 37Hz |
| **48LC000583-DATA** | 230 | 30.4 | 1755 | 10 | (1) DI1 | EXT1 | AI-1 | NOT SEL | 31.5Hz | 37Hz |
| **48LC000584-DATA** | 460 | 15.2 | 1755 | 10 | (1) DI1 | EXT1 | AI-1 | NOT SEL | 31.5Hz | 37Hz |
| **48LC000586-DATA** | 230 | 17.1 | 1760 | 5 | (1) DI1 | EXT1 | AI-1 | NOT SEL | 36Hz | 43.2Hz |
| **48LC000587-DATA** | 460 | 8.6 | 1760 | 5 | (1) DI1 | EXT1 | AI-1 | NOT SEL | 36Hz | 43.2Hz |
| **48LC000589-DATA** | 230 | 28.5 | 1760 | 7.5 | (1) DI1 | EXT1 | AI-1 | NOT SEL | 36Hz | 43.2Hz |
| **48LC000590-DATA** | 460 | 14.3 | 1760 | 7.5 | (1) DI1 | EXT1 | AI-1 | NOT SEL | 36Hz | 43.2Hz |
| **48LC000592-DATA** | 230 | 30.4 | 1755 | 10 | (1) DI1 | EXT1 | AI-1 | NOT SEL | 36Hz | 43.2Hz |
| **48LC000593-DATA** | 460 | 15.2 | 1755 | 10 | (1) DI1 | EXT1 | AI-1 | NOT SEL | 36Hz | 43.2Hz |
| **48LC000595-DATA** | 230 | 20.4 | 1760 | 5 | (1) DI1 | EXT1 | AI-1 | NOT SEL | 31.4Hz | 38.7Hz |
| **48LC000596-DATA** | 460 | 10.2 | 1760 | 5 | (1) DI1 | EXT1 | AI-1 | NOT SEL | 31.4Hz | 38.7Hz |
| **48LC000598-DATA** | 230 | 28.5 | 1760 | 7.5 | (1) DI1 | EXT1 | AI-1 | NOT SEL | 31.4Hz | 38.7Hz |
| **48LC000599-DATA** | 460 | 14.3 | 1760 | 7.5 | (1) DI1 | EXT1 | AI-1 | NOT SEL | 31.4Hz | 38.7Hz |
| **48LC000601-DATA** | 230 | 7.8 | 1735 | 2.9 | (1) DI1 | EXT1 | AI-1 | NOT SEL | 32.1Hz | 47.7Hz |
| **48LC000602-DATA** | 460 | 3.8 | 1735 | 2.9 | (1) DI1 | EXT1 | AI-1 | NOT SEL | 32.1Hz | 47.7Hz |

## Table 22 — ACS320 VFD Parameters, for 48/50 Units with I/O Flex Controls (cont)

| LOOKUP VARIABLE | CONST SPEED 3 | CONST SPEED 4 | AO1 Content Sel | MAX AMPS | STOP FCN | ACCEL | DECEL | STATION ID | BAUD RATE | PARITY |
|---|---|---|---|---|---|---|---|---|---|---|
| **VFD PARAMETERS** | **1204** | **1205** | **1501** | **2003** | **2102** | **2202** | **2203** | **5201** | **5202** | **5203** |
| **48LC000507-DATA** | 60Hz | — | 0103 OUTPUT FREQ | 5.6 | (1) Coast | 30s | 10s | — | — | — |
| **48LC000508-DATA** | 60Hz | — | 0103 OUTPUT FREQ | 2.9 | (1) Coast | 30s | 10s | — | — | — |
| **48LC000511-DATA** | 60Hz | — | 0103 OUTPUT FREQ | 6.8 | (1) Coast | 30s | 10s | — | — | — |
| **48LC000512-DATA** | 60Hz | — | 0103 OUTPUT FREQ | 3.4 | (1) Coast | 30s | 10s | — | — | — |
| **48LC000514-DATA** | 60Hz | — | 0103 OUTPUT FREQ | 5.6 | (1) Coast | 30s | 10s | — | — | — |
| **48LC000515-DATA** | 60Hz | — | 0103 OUTPUT FREQ | 2.9 | (1) Coast | 30s | 10s | — | — | — |
| **48LC000517-DATA** | 60Hz | — | 0103 OUTPUT FREQ | 6.8 | (1) Coast | 30s | 10s | — | — | — |
| **48LC000519-DATA** | 60Hz | — | 0103 OUTPUT FREQ | 3.8 | (1) Coast | 30s | 10s | — | — | — |
| **48LC000521-DATA** | 60Hz | — | 0103 OUTPUT FREQ | 7.8 | (1) Coast | 30s | 10s | — | — | — |
| **48LC000522-DATA** | 60Hz | — | 0103 OUTPUT FREQ | 3.8 | (1) Coast | 30s | 10s | — | — | — |
| **48LC000524-DATA** | 60Hz | 60Hz | 0103 OUTPUT FREQ | 5.6 | (1) Coast | 10s | 10s | — | — | — |
| **48LC000525-DATA** | 60Hz | 60Hz | 0103 OUTPUT FREQ | 2.9 | (1) Coast | 10s | 10s | — | — | — |
| **48LC000527-DATA** | 60Hz | 60Hz | 0103 OUTPUT FREQ | 7.8 | (1) Coast | 10s | 10s | — | — | — |
| **48LC000528-DATA** | 60Hz | 60Hz | 0103 OUTPUT FREQ | 3.8 | (1) Coast | 10s | 10s | — | — | — |
| **48LC000530-DATA** | 60Hz | 60Hz | 0103 OUTPUT FREQ | 5.6 | (1) Coast | 10s | 10s | — | — | — |
| **48LC000531-DATA** | 60Hz | 60Hz | 0103 OUTPUT FREQ | 2.9 | (1) Coast | 10s | 10s | — | — | — |
| **48LC000536-DATA** | 60Hz | 60Hz | 0103 OUTPUT FREQ | 3.4 | (1) Coast | 10s | 10s | — | — | — |
| **48LC000662-DATA** | 60Hz | 60Hz | 0103 OUTPUT FREQ | 2.9 | (1) Coast | 10s | 10s | — | — | — |
| **48LC000535-DATA** | 60Hz | 60Hz | 0103 OUTPUT FREQ | 6.8 | (1) Coast | 10s | 10s | — | — | — |
| **48LC000539-DATA** | 60Hz | 60Hz | 0103 OUTPUT FREQ | 12.7 | (1) Coast | 10s | 10s | — | — | — |
| **48LC000663-DATA** | 60Hz | 60Hz | 0103 OUTPUT FREQ | 3.4 | (1) Coast | 10s | 10s | — | — | — |
| **48LC000543-DATA** | 60Hz | 60Hz | 0103 OUTPUT FREQ | 3.8 | (1) Coast | 10s | 10s | — | — | — |
| **48LC000540-DATA** | 60Hz | 60Hz | 0103 OUTPUT FREQ | 6.4 | (1) Coast | 10s | 10s | — | — | — |
| **48LC000542-DATA** | 60Hz | 60Hz | 0103 OUTPUT FREQ | 7.8 | (1) Coast | 10s | 10s | — | — | — |
| **48LC000546-DATA** | 60Hz | 60Hz | 0103 OUTPUT FREQ | 4.9 | (1) Coast | 10s | 10s | — | — | — |
| **48LC000545-DATA** | 60Hz | 60Hz | 0103 OUTPUT FREQ | 9.8 | (1) Coast | 10s | 10s | — | — | — |
| **48LC000661-DATA** | 60Hz | 60Hz | 0103 OUTPUT FREQ | 2.9 | (1) Coast | 10s | 10s | — | — | — |
| **48LC000547-DATA** | 60Hz | 60Hz | 0103 OUTPUT FREQ | 7.8 | (1) Coast | 10s | 10s | — | — | — |
| **48LC000548-DATA** | 60Hz | 60Hz | 0103 OUTPUT FREQ | 3.8 | (1) Coast | 10s | 10s | — | — | — |
| **48LC000550-DATA** | 60Hz | 60Hz | 0103 OUTPUT FREQ | 12.7 | (1) Coast | 10s | 10s | — | — | — |
| **48LC000551-DATA** | 60Hz | 60Hz | 0103 OUTPUT FREQ | 6.4 | (1) Coast | 10s | 10s | — | — | — |
| **48LC000553-DATA** | 60Hz | 60Hz | 0103 OUTPUT FREQ | 20.4 | (1) Coast | 10s | 10s | — | — | — |
| **48LC000554-DATA** | 60Hz | 60Hz | 0103 OUTPUT FREQ | 10.2 | (1) Coast | 10s | 10s | — | — | — |
| **48LC000556-DATA** | 60Hz | 60Hz | 0103 OUTPUT FREQ | 28.5 | (1) Coast | 10s | 10s | — | — | — |
| **48LC000557-DATA** | 60Hz | 60Hz | 0103 OUTPUT FREQ | 14.3 | (1) Coast | 10s | 10s | — | — | — |
| **48LC000559-DATA** | 60Hz | 60Hz | 0103 OUTPUT FREQ | 30.4 | (1) Coast | 10s | 10s | — | — | — |
| **48LC000560-DATA** | 60Hz | 60Hz | 0103 OUTPUT FREQ | 15.2 | (1) Coast | 10s | 10s | — | — | — |
| **48LC000562-DATA** | 60Hz | 60Hz | 0103 OUTPUT FREQ | 20.4 | (1) Coast | 10s | 10s | — | — | — |
| **48LC000563-DATA** | 60Hz | 60Hz | 0103 OUTPUT FREQ | 10.2 | (1) Coast | 10s | 10s | — | — | — |
| **48LC000565-DATA** | 60Hz | 60Hz | 0103 OUTPUT FREQ | 28.5 | (1) Coast | 10s | 10s | — | — | — |
| **48LC000566-DATA** | 60Hz | 60Hz | 0103 OUTPUT FREQ | 14.3 | (1) Coast | 10s | 10s | — | — | — |
| **48LC000568-DATA** | 60Hz | 60Hz | 0103 OUTPUT FREQ | 7.8 | (1) Coast | 10s | 10s | — | — | — |
| **48LC000569-DATA** | 60Hz | 60Hz | 0103 OUTPUT FREQ | 3.8 | (1) Coast | 10s | 10s | — | — | — |
| **48LC000571-DATA** | 60Hz | 60Hz | 0103 OUTPUT FREQ | 20.4 | (1) Coast | 10s | 10s | — | — | — |
| **48LC000572-DATA** | 60Hz | 60Hz | 0103 OUTPUT FREQ | 10.2 | (1) Coast | 10s | 10s | — | — | — |
| **48LC000574-DATA** | 60Hz | 60Hz | 0103 OUTPUT FREQ | 28.5 | (1) Coast | 10s | 10s | — | — | — |
| **48LC000575-DATA** | 60Hz | 60Hz | 0103 OUTPUT FREQ | 14.3 | (1) Coast | 10s | 10s | — | — | — |
| **48LC000577-DATA** | 60Hz | 60Hz | 0103 OUTPUT FREQ | 30.4 | (1) Coast | 10s | 10s | — | — | — |
| **48LC000578-DATA** | 60Hz | 60Hz | 0103 OUTPUT FREQ | 15.2 | (1) Coast | 10s | 10s | — | — | — |
| **48LC000580-DATA** | 60Hz | 60Hz | 0103 OUTPUT FREQ | 7.8 | (1) Coast | 10s | 10s | — | — | — |
| **48LC000581-DATA** | 60Hz | 60Hz | 0103 OUTPUT FREQ | 3.8 | (1) Coast | 10s | 10s | — | — | — |
| **48LC000583-DATA** | 60Hz | 60Hz | 0103 OUTPUT FREQ | 30.4 | (1) Coast | 10s | 10s | — | — | — |
| **48LC000584-DATA** | 60Hz | 60Hz | 0103 OUTPUT FREQ | 15.2 | (1) Coast | 10s | 10s | — | — | — |
| **48LC000586-DATA** | 60Hz | 60Hz | 0103 OUTPUT FREQ | 17.1 | (1) Coast | 10s | 10s | — | — | — |
| **48LC000587-DATA** | 60Hz | 60Hz | 0103 OUTPUT FREQ | 8.6 | (1) Coast | 10s | 10s | — | — | — |
| **48LC000589-DATA** | 60Hz | 60Hz | 0103 OUTPUT FREQ | 28.5 | (1) Coast | 10s | 10s | — | — | — |
| **48LC000590-DATA** | 60Hz | 60Hz | 0103 OUTPUT FREQ | 14.3 | (1) Coast | 10s | 10s | — | — | — |
| **48LC000592-DATA** | 60Hz | 60Hz | 0103 OUTPUT FREQ | 30.4 | (1) Coast | 10s | 10s | — | — | — |
| **48LC000593-DATA** | 60Hz | 60Hz | 0103 OUTPUT FREQ | 15.2 | (1) Coast | 10s | 10s | — | — | — |
| **48LC000595-DATA** | 60Hz | 60Hz | 0103 OUTPUT FREQ | 20.4 | (1) Coast | 10s | 10s | — | — | — |
| **48LC000596-DATA** | 60Hz | 60Hz | 0103 OUTPUT FREQ | 10.2 | (1) Coast | 10s | 10s | — | — | — |
| **48LC000598-DATA** | 60Hz | 60Hz | 0103 OUTPUT FREQ | 28.5 | (1) Coast | 10s | 10s | — | — | — |
| **48LC000599-DATA** | 60Hz | 60Hz | 0103 OUTPUT FREQ | 14.3 | (1) Coast | 10s | 10s | — | — | — |
| **48LC000601-DATA** | 60Hz | 60Hz | 0103 OUTPUT FREQ | 7.8 | (1) Coast | 10s | 10s | — | — | — |
| **48LC000602-DATA** | 60Hz | 60Hz | 0103 OUTPUT FREQ | 3.8 | (1) Coast | 10s | 10s | — | — | — |

LEGEND

— = HVAC Default, field does not require change.

## Table 22 — ACS320 VFD Parameters, for 48/50 Units with I/O Flex Controls (cont)

| LOOKUP VARIABLE | EFB STATION ID | EFB BAUD RATE | EFB PARITY | COMM PROT SEL | RUN ENABLE | | CROSS REFERENCE | |
|---|---|---|---|---|---|---|---|---|
| VFD PARAMETERS | 5302 | 5303 | 5304 | 9802 | 1601 | 1608 | EM_PKG | CL_PKG |
| 48LC000507-DATA | 1 | 76.8kb/s | 8 NONE 1 | BACnet | DI-4 | DI-1 | N/A | N/A |
| 48LC000508-DATA | 1 | 76.8kb/s | 8 NONE 1 | BACnet | DI-4 | DI-1 | N/A | N/A |
| 48LC000511-DATA | 1 | 76.8kb/s | 8 NONE 1 | BACnet | DI-4 | DI-1 | N/A | N/A |
| 48LC000512-DATA | 1 | 76.8kb/s | 8 NONE 1 | BACnet | DI-4 | DI-1 | N/A | N/A |
| 48LC000514-DATA | 1 | 76.8kb/s | 8 NONE 1 | BACnet | DI-4 | DI-1 | N/A | N/A |
| 48LC000515-DATA | 1 | 76.8kb/s | 8 NONE 1 | BACnet | DI-4 | DI-1 | N/A | N/A |
| 48LC000517-DATA | 1 | 76.8kb/s | 8 NONE 1 | BACnet | DI-4 | DI-1 | N/A | N/A |
| 48LC000519-DATA | 1 | 76.8kb/s | 8 NONE 1 | BACnet | DI-4 | DI-1 | N/A | N/A |
| 48LC000521-DATA | 1 | 76.8kb/s | 8 NONE 1 | BACnet | DI-4 | DI-1 | N/A | N/A |
| 48LC000522-DATA | 1 | 76.8kb/s | 8 NONE 1 | BACnet | DI-4 | DI-1 | N/A | N/A |
| 48LC000524-DATA | 1 | 76.8kb/s | 8 NONE 1 | BACnet | DI-4 | DI-1 | N/A | N/A |
| 48LC000525-DATA | 1 | 76.8kb/s | 8 NONE 1 | BACnet | DI-4 | DI-1 | N/A | N/A |
| 48LC000527-DATA | 1 | 76.8kb/s | 8 NONE 1 | BACnet | DI-4 | DI-1 | N/A | N/A |
| 48LC000528-DATA | 1 | 76.8kb/s | 8 NONE 1 | BACnet | DI-4 | DI-1 | N/A | N/A |
| 48LC000530-DATA | 1 | 76.8kb/s | 8 NONE 1 | BACnet | DI-4 | DI-1 | N/A | N/A |
| 48LC000531-DATA | 1 | 76.8kb/s | 8 NONE 1 | BACnet | DI-4 | DI-1 | N/A | N/A |
| 48LC000536-DATA | 1 | 76.8kb/s | 8 NONE 1 | BACnet | DI-4 | DI-1 | N/A | N/A |
| 48LC000662-DATA | 1 | 76.8kb/s | 8 NONE 1 | BACnet | DI-4 | DI-1 | N/A | N/A |
| 48LC000535-DATA | 1 | 76.8kb/s | 8 NONE 1 | BACnet | DI-4 | DI-1 | N/A | N/A |
| 48LC000539-DATA | 1 | 76.8kb/s | 8 NONE 1 | BACnet | DI-4 | DI-1 | N/A | N/A |
| 48LC000663-DATA | 1 | 76.8kb/s | 8 NONE 1 | BACnet | DI-4 | DI-1 | N/A | N/A |
| 48LC000543-DATA | 1 | 76.8kb/s | 8 NONE 1 | BACnet | DI-4 | DI-1 | N/A | N/A |
| 48LC000540-DATA | 1 | 76.8kb/s | 8 NONE 1 | BACnet | DI-4 | DI-1 | N/A | N/A |
| 48LC000542-DATA | 1 | 76.8kb/s | 8 NONE 1 | BACnet | DI-4 | DI-1 | N/A | N/A |
| 48LC000546-DATA | 1 | 76.8kb/s | 8 NONE 1 | BACnet | DI-4 | DI-1 | N/A | N/A |
| 48LC000545-DATA | 1 | 76.8kb/s | 8 NONE 1 | BACnet | DI-4 | DI-1 | N/A | N/A |
| 48LC000661-DATA | 1 | 76.8kb/s | 8 NONE 1 | BACnet | DI-4 | DI-1 | N/A | N/A |
| 48LC000547-DATA | 1 | 76.8kb/s | 8 NONE 1 | BACnet | DI-4 | DI-1 | N/A | N/A |
| 48LC000548-DATA | 1 | 76.8kb/s | 8 NONE 1 | BACnet | DI-4 | DI-1 | N/A | N/A |
| 48LC000550-DATA | 1 | 76.8kb/s | 8 NONE 1 | BACnet | DI-4 | DI-1 | N/A | N/A |
| 48LC000551-DATA | 1 | 76.8kb/s | 8 NONE 1 | BACnet | DI-4 | DI-1 | N/A | N/A |
| 48LC000553-DATA | 1 | 76.8kb/s | 8 NONE 1 | BACnet | DI-4 | DI-1 | N/A | N/A |
| 48LC000554-DATA | 1 | 76.8kb/s | 8 NONE 1 | BACnet | DI-4 | DI-1 | N/A | N/A |
| 48LC000556-DATA | 1 | 76.8kb/s | 8 NONE 1 | BACnet | DI-4 | DI-1 | N/A | N/A |
| 48LC000557-DATA | 1 | 76.8kb/s | 8 NONE 1 | BACnet | DI-4 | DI-1 | N/A | N/A |
| 48LC000559-DATA | 1 | 76.8kb/s | 8 NONE 1 | BACnet | DI-4 | DI-1 | N/A | N/A |
| 48LC000560-DATA | 1 | 76.8kb/s | 8 NONE 1 | BACnet | DI-4 | DI-1 | N/A | N/A |
| 48LC000562-DATA | 1 | 76.8kb/s | 8 NONE 1 | BACnet | DI-4 | DI-1 | N/A | N/A |
| 48LC000563-DATA | 1 | 76.8kb/s | 8 NONE 1 | BACnet | DI-4 | DI-1 | N/A | N/A |
| 48LC000565-DATA | 1 | 76.8kb/s | 8 NONE 1 | BACnet | DI-4 | DI-1 | N/A | N/A |
| 48LC000566-DATA | 1 | 76.8kb/s | 8 NONE 1 | BACnet | DI-4 | DI-1 | N/A | N/A |
| 48LC000568-DATA | 1 | 76.8kb/s | 8 NONE 1 | BACnet | DI-4 | DI-1 | N/A | N/A |
| 48LC000569-DATA | 1 | 76.8kb/s | 8 NONE 1 | BACnet | DI-4 | DI-1 | N/A | N/A |
| 48LC000571-DATA | 1 | 76.8kb/s | 8 NONE 1 | BACnet | DI-4 | DI-1 | N/A | N/A |
| 48LC000572-DATA | 1 | 76.8kb/s | 8 NONE 1 | BACnet | DI-4 | DI-1 | N/A | N/A |
| 48LC000574-DATA | 1 | 76.8kb/s | 8 NONE 1 | BACnet | DI-4 | DI-1 | N/A | N/A |
| 48LC000575-DATA | 1 | 76.8kb/s | 8 NONE 1 | BACnet | DI-4 | DI-1 | N/A | N/A |
| 48LC000577-DATA | 1 | 76.8kb/s | 8 NONE 1 | BACnet | DI-4 | DI-1 | N/A | N/A |
| 48LC000578-DATA | 1 | 76.8kb/s | 8 NONE 1 | BACnet | DI-4 | DI-1 | N/A | N/A |
| 48LC000580-DATA | 1 | 76.8kb/s | 8 NONE 1 | BACnet | DI-4 | DI-1 | N/A | N/A |
| 48LC000581-DATA | 1 | 76.8kb/s | 8 NONE 1 | BACnet | DI-4 | DI-1 | N/A | N/A |
| 48LC000583-DATA | 1 | 76.8kb/s | 8 NONE 1 | BACnet | DI-4 | DI-1 | N/A | N/A |
| 48LC000584-DATA | 1 | 76.8kb/s | 8 NONE 1 | BACnet | DI-4 | DI-1 | N/A | N/A |
| 48LC000586-DATA | 1 | 76.8kb/s | 8 NONE 1 | BACnet | DI-4 | DI-1 | N/A | N/A |
| 48LC000587-DATA | 1 | 76.8kb/s | 8 NONE 1 | BACnet | DI-4 | DI-1 | N/A | N/A |
| 48LC000589-DATA | 1 | 76.8kb/s | 8 NONE 1 | BACnet | DI-4 | DI-1 | N/A | N/A |
| 48LC000590-DATA | 1 | 76.8kb/s | 8 NONE 1 | BACnet | DI-4 | DI-1 | N/A | N/A |
| 48LC000592-DATA | 1 | 76.8kb/s | 8 NONE 1 | BACnet | DI-4 | DI-1 | N/A | N/A |
| 48LC000593-DATA | 1 | 76.8kb/s | 8 NONE 1 | BACnet | DI-4 | DI-1 | N/A | N/A |
| 48LC000595-DATA | 1 | 76.8kb/s | 8 NONE 1 | BACnet | DI-4 | DI-1 | N/A | N/A |
| 48LC000596-DATA | 1 | 76.8kb/s | 8 NONE 1 | BACnet | DI-4 | DI-1 | N/A | N/A |
| 48LC000598-DATA | 1 | 76.8kb/s | 8 NONE 1 | BACnet | DI-4 | DI-1 | N/A | N/A |
| 48LC000599-DATA | 1 | 76.8kb/s | 8 NONE 1 | BACnet | DI-4 | DI-1 | N/A | N/A |
| 48LC000601-DATA | 1 | 76.8kb/s | 8 NONE 1 | BACnet | DI-4 | DI-1 | N/A | N/A |
| 48LC000602-DATA | 1 | 76.8kb/s | 8 NONE 1 | BACnet | DI-4 | DI-1 | N/A | N/A |

## Table 22 — ACS320 VFD Parameters, for 48/50 Units with I/O Flex Controls (cont)

| VFD PARAMETERS[a] | PKG ABB ACS320 | MOTOR PART NUMBER | VFD PART NUMBER | DRIVE HP | DESC |
|---|---|---|---|---|---|
| **48LC000604-DATA** | 48LC000604 | HD60FK658 | HK30WA506 | 3 | MRT 5.25 HP 230V |
| **48LC000605-DATA** | 48LC000605 | HD60FK658 | HK30WA513 | 3 | MRT 5.25 HP 460V |
| **48LC000607-DATA** | 48LC000607 | HD60FK657 | HK30WA507 | 7.5 | MRT 5 HP 230V |
| **48LC000608-DATA** | 48LC000608 | HD60FK657 | HK30WA514 | 7.5 | MRT 5 HP 460V |
| **48LC000610-DATA** | 48LC000610 | HD62FK654 | HK30WA508 | 10 | MRT 7.5 HP 230V |
| **48LC000611-DATA** | 48LC000611 | HD62FK654 | HK30WA515 | 10 | MRT 7.5 HP 460V |
| **48LC000613-DATA** | 48LC000613 | HD58FE654 | HK30WA505 | 2 | MRT 2.9 HP 230V |
| **48LC000614-DATA** | 48LC000614 | HD58FE654 | HK30WA512 | 3 | MRT 2.9 HP 460V |
| **48LC000616-DATA** | 48LC000616 | HD60FK657 | HK30WA507 | 7.5 | MRT 5 HP 230V |
| **48LC000617-DATA** | 48LC000617 | HD60FK657 | HK30WA514 | 7.5 | MRT 5 HP 460V |
| **48LC000619-DATA** | 48LC000619 | HD62FK654 | HK30WA508 | 10 | MRT 7.5 HP 230V |
| **48LC000620-DATA** | 48LC000620 | HD62FK654 | HK30WA515 | 10 | MRT 7.5 HP 460V |
| **48LC000622-DATA** | 48LC000622 | HD64FK654 | HK30WA535 | 15 | MRT 10 HP 230V |
| **48LC000623-DATA** | 48LC000623 | HD64FK654 | HK30WA536 | 30.9 | MRT 10 HP 460V |
| **48LC000625-DATA** | 48LC000625 | HD58FE654 | HK30WA505 | 2 | MRT 2.9 HP 230V |
| **48LC000626-DATA** | 48LC000626 | HD58FE654 | HK30WA512 | 3 | STR 2.9 HP 460V |
| **48LC000628-DATA** | 48LC000628 | HD60FK657 | HK30WA507 | 7.5 | SRT 5 HP 230V |
| **48LC000629-DATA** | 48LC000629 | HD60FK657 | HK30WA514 | 7.5 | STR 5 HP 460V |
| **48LC000631-DATA** | 48LC000631 | HD62FK654 | HK30WA508 | 10 | STR 7.5 HP 230V |
| **48LC000632-DATA** | 48LC000632 | HD62FK654 | HK30WA515 | 10 | STR 7.5 HP 460V |
| **48LC000634-DATA** | 48LC000634 | HD64FK654 | HK30WA535 | 15 | STR 10 HP 230V |
| **48LC000635-DATA** | 48LC000635 | HD64FK654 | HK30WA536 | 30.9 | MRT 10 HP 460V |
| **48LC000637-DATA** | 48LC000637 | HD60FK657 | HK30WA507 | 7.5 | MRT 5 HP 230V |
| **48LC000638-DATA** | 48LC000638 | HD60FK657 | HK30WA514 | 7.5 | MRT 5 HP 460V |
| **48LC000640-DATA** | 48LC000640 | HD60FK657 | HK30WA508 | 10 | MRT 5 HP 230V |
| **48LC000641-DATA** | 48LC000641 | HD60FK657 | HK30WA515 | 10 | MRT 5 HP 460V |
| **48LC000644-DATA** | 48LC000644 | HD62FK654 | HK30WA508 | 10 | MRT 7.5 HP 230V |
| **48LC000645-DATA** | 48LC000645 | HD62FK654 | HK30WA515 | 10 | MRT 7.5 HP 460V |
| **48LC000647-DATA** | 48LC000647 | HD60FK657 | HK30WA507 | 7.5 | MRT 5 HP 230V |
| **48LC000648-DATA** | 48LC000648 | HD60FK657 | HK30WA514 | 7.5 | MRT 5 HP 460V |
| **48LC000650-DATA** | 48LC000650 | HD62FK654 | HK30WA508 | 10 | MRT 7.5 HP 230V |
| **48LC000651-DATA** | 48LC000651 | HD62FK654 | HK30WA515 | 10 | MRT 7.5 HP 460V |
| **48LC000653-DATA** | 48LC000653 | HD64FK654 | HK30WA535 | 15 | MRT 10 HP 230V |
| **48LC000654-DATA** | 48LC000654 | HD64FK654 | HK30WA536 | 30.9 | MRT 10 HP 460V |
| **48LC000664-DATA** | 48LC000664 | HD60FK657 | HK30WA515 | 10 | MRT 5 HP 460V |
| **50HE002320-DATA** | 50HE002320 | HD58FE654 | HK30WA523 | 3 | MRT 2.9 HP 230V |
| **50HE002324-DATA** | 50HE002324 | HD58FE654 | HK30WA530 | 3 | MRT 2.9 HP 460V |
| **50HE002321-DATA** | 50HE002321 | HD60FE656 | HK30WA523 | 3 | MRT 3.7 HP 230V |
| **50HE002325-DATA** | 50HE002325 | HD60FE656 | HK30WA534 | 5 | MRT 3.7 HP 460V |
| **50HE002322-DATA** | 50HE002322 | HD60FK657 | HK30WA524 | 7.5 | MRT 5.0 HP 230V |
| **50H4002326-DATA** | 50H4002326 | HD60FK657 | HK30WA532 | 7.5 | MRT 5.0 HP 460V |
| **50HE002323-DATA** | 50HE002323 | HD62FK654 | HK30WA524 | 7.5 | MRT 7.5 HP 230V |
| **50HE002327-DATA** | 50HE002327 | HD62FK654 | HK30WA532 | 7.5 | MRT 7.5 HP 460V |
| **50HE002331-DATA** | 50HE002331 | HD60FK658 | HK30WA523 | 3 | MRT 5.3 HP 230V |
| **50HE002333-DATA** | 50HE002333 | HD60FK658 | HK30WA532 | 7.5 | MRT 5.3 HP 460V |
| **50HE003081-DATA** | 50HE003081 | HD58FE654 | HK30WA523 | 3 | MRT 2.9 HP 230V |
| **50HE003082-DATA** | 50HE003082 | HD58FE654 | HK30WA530 | 3 | MRT 2.9 HP 460V |
| **50HE003084-DATA** | 50HE003084 | HD60FE656 | HK30WA523 | 3 | MRT 3.7 HP 230V |
| **50HE003085-DATA** | 50HE003085 | HD60FE656 | HK30WA534 | 5 | MRT 3.7 HP 460V |
| **50HE003086-DATA** | 50HE003086 | HD60FK658 | HK30WA523 | 3 | MRT 5.3 HP 230V |
| **50HE003087-DATA** | 50HE003087 | HD60FK658 | HK30WA532 | 7.5 | MRT 5.3 HP 460V |
| **50HE003089-DATA** | 50HE003089 | HD60FK657 | HK30WA524 | 7.5 | MRT 5.0 HP 230V |
| **50HE003090-DATA** | 50HE003090 | HD60FK657 | HK30WA532 | 7.5 | MRT 5.0 HP 460V |
| **50HE003092-DATA** | 50HE003092 | HD62FK654 | HK30WA524 | 7.5 | MRT 7.5 HP 230V |
| **50HE003093-DATA** | 50HE003093 | HD62FK654 | HK30WA532 | 7.5 | MRT 7.5 HP 460V |
| **48TM005163-DATA** | 48TM005163 | HD56FR233 | HK30WA523 | 3 | SRT 1.7 HP 230V |
| **48TM005166-DATA** | 48TM005166 | HD56FR463 | HK30WA530 | 3 | SRT 1.7 HP 460V |
| **48TM005162-DATA** | 48TM005162 | HD56FE653 | HK30WA523 | 3 | SRT 2.4 HP 230V |
| **48TM005174-DATA** | 48TM005174 | HD56FE653 | HK30WA530 | 3 | SRT 2.4 HP 460V |
| **48TM005164-DATA** | 48TM005164 | HD60FE656 | HK30WA523 | 3 | SRT 3.7 HP 230V |
| **48TM005173-DATA** | 48TM005173 | HD60FE656 | HK30WA534 | 5 | SRT 3.7 HP 460V |
| **48TM005165-DATA** | 48TM005165 | HD60FK658 | HK30WA523 | 3 | SRT 5.3 HP 230V |
| **48TM005168-DATA** | 48TM005168 | HD60FK658 | HK30WA532 | 7.5 | SRT 5.3 HP 460V |
| **48TM005172-DATA** | 48TM005172 | HD58FE654 | HK30WA523 | 3 | SRT 2.9 HP 230V |
| **48TM005167-DATA** | 48TM005167 | HD58FE654 | HK30WA530 | 3 | SRT 2.9 HP 460V |

NOTE(S):

a. VFD Parameters 48TM005433-DATA thru 50TM001618-DATA begin on page 47.

## Table 22 — ACS320 VFD Parameters, for 48/50 Units with I/O Flex Controls (cont)

| LOOKUP VARIABLE | VOLTAGE | N. AMPS | N. RPM | N. HP | EXT1 COMMANDS | EXT1/EXT2 SEL | REF1 SELECT | CONST SPEED SEL | CONST SPEED 1 | CONST SPEED 2 |
|---|---|---|---|---|---|---|---|---|---|---|
| **VFD PARAMETERS** | **9905** | **9906** | **9908** | **9909** | **1001** | **1102** | **1103** | **1201** | **1202** | **1203** |
| **48LC000604-DATA** | 230 | 12.7 | 1745 | 5.25 | (1) DI1 | EXT1 | AI-1 | NOT SEL | 32.1Hz | 47.7Hz |
| **48LC000605-DATA** | 460 | 6.4 | 1745 | 5.25 | (1) DI1 | EXT1 | AI-1 | NOT SEL | 32.1Hz | 47.7Hz |
| **48LC000607-DATA** | 230 | 20.4 | 1760 | 5 | (1) DI1 | EXT1 | AI-1 | NOT SEL | 32.1Hz | 47.7Hz |
| **48LC000608-DATA** | 460 | 10.2 | 1760 | 5 | (1) DI1 | EXT1 | AI-1 | NOT SEL | 32.1Hz | 47.7Hz |
| **48LC000610-DATA** | 230 | 28.5 | 1760 | 7.5 | (1) DI1 | EXT1 | AI-1 | NOT SEL | 32.1Hz | 47.7Hz |
| **48LC000611-DATA** | 460 | 14.3 | 1760 | 7.5 | (1) DI1 | EXT1 | AI-1 | NOT SEL | 32.1Hz | 47.7Hz |
| **48LC000613-DATA** | 230 | 7.8 | 1735 | 2.9 | (1) DI1 | EXT1 | AI-1 | NOT SEL | 34Hz | 49.4Hz |
| **48LC000614-DATA** | 460 | 3.8 | 1735 | 2.9 | (1) DI1 | EXT1 | AI-1 | NOT SEL | 34Hz | 49.4Hz |
| **48LC000616-DATA** | 230 | 20.4 | 1760 | 5 | (1) DI1 | EXT1 | AI-1 | NOT SEL | 34Hz | 49.4Hz |
| **48LC000617-DATA** | 460 | 10.2 | 1760 | 5 | (1) DI1 | EXT1 | AI-1 | NOT SEL | 34Hz | 49.4Hz |
| **48LC000619-DATA** | 230 | 28.5 | 1760 | 7.5 | (1) DI1 | EXT1 | AI-1 | NOT SEL | 34Hz | 49.4Hz |
| **48LC000620-DATA** | 460 | 14.3 | 1760 | 7.5 | (1) DI1 | EXT1 | AI-1 | NOT SEL | 34Hz | 49.4Hz |
| **48LC000622-DATA** | 230 | 30.4 | 1755 | 10 | (1) DI1 | EXT1 | AI-1 | NOT SEL | 34Hz | 49.4Hz |
| **48LC000623-DATA** | 460 | 15.2 | 1755 | 10 | (1) DI1 | EXT1 | AI-1 | NOT SEL | 34Hz | 49.4Hz |
| **48LC000625-DATA** | 230 | 7.8 | 1750 | 2.9 | (1) DI1 | EXT1 | AI-1 | NOT SEL | 31.5Hz | 37Hz |
| **48LC000626-DATA** | 460 | 3.8 | 1750 | 2.9 | (1) DI1 | EXT1 | AI-1 | NOT SEL | 31.5Hz | 37Hz |
| **48LC000628-DATA** | 230 | 17.1 | 1760 | 5 | (1) DI1 | EXT1 | AI-1 | NOT SEL | 31.5Hz | 37Hz |
| **48LC000629-DATA** | 460 | 8.6 | 1760 | 5 | (1) DI1 | EXT1 | AI-1 | NOT SEL | 31.5Hz | 37Hz |
| **48LC000631-DATA** | 230 | 28.5 | 1760 | 7.5 | (1) DI1 | EXT1 | AI-1 | NOT SEL | 31.5Hz | 37Hz |
| **48LC000632-DATA** | 460 | 14.3 | 1760 | 7.5 | (1) DI1 | EXT1 | AI-1 | NOT SEL | 31.5Hz | 37Hz |
| **48LC000634-DATA** | 230 | 30.4 | 1755 | 10 | (1) DI1 | EXT1 | AI-1 | NOT SEL | 31.5Hz | 37Hz |
| **48LC000635-DATA** | 460 | 15.2 | 1755 | 10 | (1) DI1 | EXT1 | AI-1 | NOT SEL | 31.5Hz | 37Hz |
| **48LC000637-DATA** | 230 | 20.4 | 1760 | 5 | (1) DI1 | EXT1 | AI-1 | NOT SEL | 31.4Hz | 38.7Hz |
| **48LC000638-DATA** | 460 | 10.2 | 1760 | 5 | (1) DI1 | EXT1 | AI-1 | NOT SEL | 31.4Hz | 38.7Hz |
| **48LC000640-DATA** | 230 | 20.4 | 1760 | 5 | (1) DI1 | EXT1 | AI-1 | NOT SEL | 31.4Hz | 38.7Hz |
| **48LC000641-DATA** | 460 | 10.2 | 1760 | 5 | (1) DI1 | EXT1 | AI-1 | NOT SEL | 31.4Hz | 38.7Hz |
| **48LC000644-DATA** | 230 | 28.5 | 1760 | 7.5 | (1) DI1 | EXT1 | AI-1 | NOT SEL | 31.4Hz | 38.7Hz |
| **48LC000645-DATA** | 460 | 14.3 | 1760 | 7.5 | (1) DI1 | EXT1 | AI-1 | NOT SEL | 31.4Hz | 38.7Hz |
| **48LC000647-DATA** | 230 | 20.4 | 1760 | 5 | (1) DI1 | EXT1 | AI-1 | NOT SEL | 36Hz | 43.2Hz |
| **48LC000648-DATA** | 460 | 10.2 | 1760 | 5 | (1) DI1 | EXT1 | AI-1 | NOT SEL | 36Hz | 43.2Hz |
| **48LC000650-DATA** | 230 | 28.5 | 1760 | 7.5 | (1) DI1 | EXT1 | AI-1 | NOT SEL | 36Hz | 43.2Hz |
| **48LC000651-DATA** | 460 | 14.3 | 1760 | 7.5 | (1) DI1 | EXT1 | AI-1 | NOT SEL | 36Hz | 43.2Hz |
| **48LC000653-DATA** | 230 | 30.4 | 1755 | 10 | (1) DI1 | EXT1 | AI-1 | NOT SEL | 36Hz | 43.2Hz |
| **48LC000654-DATA** | 460 | 15.2 | 1755 | 10 | (1) DI1 | EXT1 | AI-1 | NOT SEL | 36Hz | 43.2Hz |
| **48LC000664-DATA** | 460 | 10.2 | 1760 | 5 | (1) DI1 | EXT1 | AI-1 | NOT SEL | 31.4Hz | 38.7Hz |
| **50HE002320-DATA** | 230 | 7.8 | 1725 | 2.9 | — | — | — | DI 2,3 | 40Hz | 60Hz |
| **50HE002324-DATA** | 460 | 3.8 | 1725 | 2.9 | — | — | — | DI 2,3 | 40Hz | 60Hz |
| **50HE002321-DATA** | 230 | 9.8 | 1725 | 3.7 | — | — | — | DI 2,3 | 40Hz | 60Hz |
| **50HE002325-DATA** | 460 | 4.9 | 1725 | 3.7 | — | — | — | DI 2,3 | 40Hz | 60Hz |
| **50HE002322-DATA** | 230 | 20.4 | 1760 | 5 | — | — | — | DI 2,3 | 40Hz | 60Hz |
| **50H4002326-DATA** | 460 | 10.2 | 1760 | 5 | — | — | — | DI 2,3 | 40Hz | 60Hz |
| **50HE002323-DATA** | 230 | 28.5 | 1760 | 7.5 | — | — | — | DI 2,3 | 40Hz | 60Hz |
| **50HE002327-DATA** | 460 | 13.7 | 1760 | 7.5 | — | — | — | DI 2,3 | 40Hz | 60Hz |
| **50HE002331-DATA** | 230 | 12.7 | 1740 | 5.3 | — | — | — | DI 2,3 | 40Hz | 60Hz |
| **50HE002333-DATA** | 460 | 6.4 | 1740 | 5.3 | — | — | — | DI 2,3 | 40Hz | 60Hz |
| **50HE003081-DATA** | 230 | 7.8 | 1725 | 2.9 | — | — | — | DI 2,3 | 40Hz | 60Hz |
| **50HE003082-DATA** | 460 | 3.8 | 1725 | 2.9 | — | — | — | DI 2,3 | 40Hz | 60Hz |
| **50HE003084-DATA** | 230 | 9.8 | 1725 | 3.7 | — | — | — | DI 2,3 | 40Hz | 60Hz |
| **50HE003085-DATA** | 460 | 4.9 | 1725 | 3.7 | — | — | — | DI 2,3 | 40Hz | 60Hz |
| **50HE003086-DATA** | 230 | 12.7 | 1740 | 5.3 | — | — | — | DI 2,3 | 40Hz | 60Hz |
| **50HE003087-DATA** | 460 | 6.4 | 1740 | 5.3 | — | — | — | DI 2,3 | 40Hz | 60Hz |
| **50HE003089-DATA** | 230 | 20.4 | 1760 | 5 | — | — | — | DI 2,3 | 40Hz | 60Hz |
| **50HE003090-DATA** | 460 | 10.2 | 1760 | 5 | — | — | — | DI 2,3 | 40Hz | 60Hz |
| **50HE003092-DATA** | 230 | 28.5 | 1760 | 7.5 | — | — | — | DI 2,3 | 40Hz | 60Hz |
| **50HE003093-DATA** | 460 | 13.7 | 1760 | 7.5 | — | — | — | DI 2,3 | 40Hz | 60Hz |
| **48TM005163-DATA** | 230 | 5.6 | 1725 | 1.7 | — | — | — | DI 2,3 | 40Hz | 60Hz |
| **48TM005166-DATA** | 460 | 2.9 | 1725 | 1.7 | — | — | — | DI 2,3 | 40Hz | 60Hz |
| **48TM005162-DATA** | 230 | 6.8 | 1725 | 2.4 | — | — | — | DI 2,3 | 40Hz | 60Hz |
| **48TM005174-DATA** | 460 | 3.4 | 1725 | 2.4 | — | — | — | DI 2,3 | 40Hz | 60Hz |
| **48TM005164-DATA** | 230 | 9.8 | 1725 | 3.7 | — | — | — | DI 2,3 | 40Hz | 60Hz |
| **48TM005173-DATA** | 460 | 4.9 | 1725 | 3.7 | — | — | — | DI 2,3 | 40Hz | 60Hz |
| **48TM005165-DATA** | 230 | 12.7 | 1740 | 5.3 | — | — | — | DI 2,3 | 40Hz | 60Hz |
| **48TM005168-DATA** | 460 | 6.4 | 1740 | 5.3 | — | — | — | DI 2,3 | 40Hz | 60Hz |
| **48TM005172-DATA** | 230 | 7.8 | 1725 | 2.9 | — | — | — | DI 2,3 | 40Hz | 60Hz |
| **48TM005167-DATA** | 460 | 3.8 | 1725 | 2.9 | — | — | — | DI 2,3 | 40Hz | 60Hz |

LEGEND

— = HVAC Default, field does not require change.

## Table 22 — ACS320 VFD Parameters, for 48/50 Units with I/O Flex Controls (cont)

| LOOKUP VARIABLE | CONST SPEED 3 | CONST SPEED 4 | AO1 Content Sel | MAX AMPS | STOP FCN | ACCEL | DECEL | STATION ID | BAUD RATE | PARITY |
|---|---|---|---|---|---|---|---|---|---|---|
| **VFD PARAMETERS** | **1204** | **1205** | **1501** | **2003** | **2102** | **2202** | **2203** | **5201** | **5202** | **5203** |
| **48LC000604-DATA** | 60Hz | 60Hz | 0103 OUTPUT FREQ | 12.7 | (1) Coast | 10s | 10s | — | — | — |
| **48LC000605-DATA** | 60Hz | 60Hz | 0103 OUTPUT FREQ | 6.4 | (1) Coast | 10s | 10s | — | — | — |
| **48LC000607-DATA** | 60Hz | 60Hz | 0103 OUTPUT FREQ | 20.4 | (1) Coast | 10s | 10s | — | — | — |
| **48LC000608-DATA** | 60Hz | 60Hz | 0103 OUTPUT FREQ | 10.2 | (1) Coast | 10s | 10s | — | — | — |
| **48LC000610-DATA** | 60Hz | 60Hz | 0103 OUTPUT FREQ | 28.5 | (1) Coast | 10s | 10s | — | — | — |
| **48LC000611-DATA** | 60Hz | 60Hz | 0103 OUTPUT FREQ | 14.3 | (1) Coast | 10s | 10s | — | — | — |
| **48LC000613-DATA** | 60Hz | 60Hz | 0103 OUTPUT FREQ | 7.8 | (1) Coast | 10s | 10s | — | — | — |
| **48LC000614-DATA** | 60Hz | 60Hz | 0103 OUTPUT FREQ | 3.8 | (1) Coast | 10s | 10s | — | — | — |
| **48LC000616-DATA** | 60Hz | 60Hz | 0103 OUTPUT FREQ | 20.4 | (1) Coast | 10s | 10s | — | — | — |
| **48LC000617-DATA** | 60Hz | 60Hz | 0103 OUTPUT FREQ | 10.2 | (1) Coast | 10s | 10s | — | — | — |
| **48LC000619-DATA** | 60Hz | 60Hz | 0103 OUTPUT FREQ | 28.5 | (1) Coast | 10s | 10s | — | — | — |
| **48LC000620-DATA** | 60Hz | 60Hz | 0103 OUTPUT FREQ | 14.3 | (1) Coast | 10s | 10s | — | — | — |
| **48LC000622-DATA** | 60Hz | 60Hz | 0103 OUTPUT FREQ | 30.4 | (1) Coast | 10s | 10s | — | — | — |
| **48LC000623-DATA** | 60Hz | 60Hz | 0103 OUTPUT FREQ | 15.2 | (1) Coast | 10s | 10s | — | — | — |
| **48LC000625-DATA** | 60Hz | 60Hz | 0103 OUTPUT FREQ | 7.8 | (1) Coast | 10s | 10s | — | — | — |
| **48LC000626-DATA** | 60Hz | 60Hz | 0103 OUTPUT FREQ | 3.8 | (1) Coast | 10s | 10s | — | — | — |
| **48LC000628-DATA** | 60Hz | 60Hz | 0103 OUTPUT FREQ | 17.1 | (1) Coast | 10s | 10s | — | — | — |
| **48LC000629-DATA** | 60Hz | 60Hz | 0103 OUTPUT FREQ | 8.6 | (1) Coast | 10s | 10s | — | — | — |
| **48LC000631-DATA** | 60Hz | 60Hz | 0103 OUTPUT FREQ | 28.5 | (1) Coast | 10s | 10s | — | — | — |
| **48LC000632-DATA** | 60Hz | 60Hz | 0103 OUTPUT FREQ | 14.3 | (1) Coast | 10s | 10s | — | — | — |
| **48LC000634-DATA** | 60Hz | 60Hz | 0103 OUTPUT FREQ | 30.4 | (1) Coast | 10s | 10s | — | — | — |
| **48LC000635-DATA** | 60Hz | 60Hz | 0103 OUTPUT FREQ | 15.2 | (1) Coast | 10s | 10s | — | — | — |
| **48LC000637-DATA** | 60Hz | 60Hz | 0103 OUTPUT FREQ | 20.4 | (1) Coast | 10s | 10s | — | — | — |
| **48LC000638-DATA** | 60Hz | 60Hz | 0103 OUTPUT FREQ | 10.2 | (1) Coast | 10s | 10s | — | — | — |
| **48LC000640-DATA** | 60Hz | 60Hz | 0103 OUTPUT FREQ | 20.4 | (1) Coast | 10s | 10s | — | — | — |
| **48LC000641-DATA** | 60Hz | 60Hz | 0103 OUTPUT FREQ | 10.2 | (1) Coast | 10s | 10s | — | — | — |
| **48LC000644-DATA** | 60Hz | 60Hz | 0103 OUTPUT FREQ | 28.5 | (1) Coast | 10s | 10s | — | — | — |
| **48LC000645-DATA** | 60Hz | 60Hz | 0103 OUTPUT FREQ | 14.3 | (1) Coast | 10s | 10s | — | — | — |
| **48LC000647-DATA** | 60Hz | 60Hz | 0103 OUTPUT FREQ | 20.4 | (1) Coast | 10s | 10s | — | — | — |
| **48LC000648-DATA** | 60Hz | 60Hz | 0103 OUTPUT FREQ | 10.2 | (1) Coast | 10s | 10s | — | — | — |
| **48LC000650-DATA** | 60Hz | 60Hz | 0103 OUTPUT FREQ | 28.5 | (1) Coast | 10s | 10s | — | — | — |
| **48LC000651-DATA** | 60Hz | 60Hz | 0103 OUTPUT FREQ | 14.3 | (1) Coast | 10s | 10s | — | — | — |
| **48LC000653-DATA** | 60Hz | 60Hz | 0103 OUTPUT FREQ | 30.4 | (1) Coast | 10s | 10s | — | — | — |
| **48LC000654-DATA** | 60Hz | 60Hz | 0103 OUTPUT FREQ | 15.2 | (1) Coast | 10s | 10s | — | — | — |
| **48LC000664-DATA** | 60Hz | 60Hz | 0103 OUTPUT FREQ | 10.2 | (1) Coast | 10s | 10s | — | — | — |
| **50HE002320-DATA** | 60Hz | — | — | 7.8 | (1) Coast | 30s | 30s | — | — | — |
| **50HE002324-DATA** | 60Hz | — | — | 3.8 | (1) Coast | 30s | 30s | — | — | — |
| **50HE002321-DATA** | 60Hz | — | — | 9.8 | (1) Coast | 30s | 30s | — | — | — |
| **50HE002325-DATA** | 60Hz | — | — | 4.9 | (1) Coast | 30s | 30s | — | — | — |
| **50HE002322-DATA** | 60Hz | — | — | 20.4 | (1) Coast | 30s | 30s | — | — | — |
| **50H4002326-DATA** | 60Hz | — | — | 10.2 | (1) Coast | 30s | 30s | — | — | — |
| **50HE002323-DATA** | 60Hz | — | — | 28.5 | (1) Coast | 30s | 30s | — | — | — |
| **50HE002327-DATA** | 60Hz | — | — | 13.7 | (1) Coast | 30s | 30s | — | — | — |
| **50HE002331-DATA** | 60Hz | — | — | 12.7 | (1) Coast | 30s | 30s | — | — | — |
| **50HE002333-DATA** | 60Hz | — | — | 6.4 | (1) Coast | 30s | 30s | — | — | — |
| **50HE003081-DATA** | 60Hz | — | — | 7.8 | (1) Coast | 30s | 30s | — | — | — |
| **50HE003082-DATA** | 60Hz | — | — | 3.8 | (1) Coast | 30s | 30s | — | — | — |
| **50HE003084-DATA** | 60Hz | — | — | 9.8 | (1) Coast | 30s | 30s | — | — | — |
| **50HE003085-DATA** | 60Hz | — | — | 4.9 | (1) Coast | 30s | 30s | — | — | — |
| **50HE003086-DATA** | 60Hz | — | — | 12.7 | (1) Coast | 30s | 30s | — | — | — |
| **50HE003087-DATA** | 60Hz | — | — | 6.4 | (1) Coast | 30s | 30s | — | — | — |
| **50HE003089-DATA** | 60Hz | — | — | 20.4 | (1) Coast | 30s | 30s | — | — | — |
| **50HE003090-DATA** | 60Hz | — | — | 10.2 | (1) Coast | 30s | 30s | — | — | — |
| **50HE003092-DATA** | 60Hz | — | — | 28.5 | (1) Coast | 30s | 30s | — | — | — |
| **50HE003093-DATA** | 60Hz | — | — | 13.7 | (1) Coast | 30s | 30s | — | — | — |
| **48TM005163-DATA** | 60Hz | — | — | 5.6 | (1) Coast | 30s | 30s | — | — | — |
| **48TM005166-DATA** | 60Hz | — | — | 2.9 | (1) Coast | 30s | 30s | — | — | — |
| **48TM005162-DATA** | 60Hz | — | — | 6.8 | (1) Coast | 30s | 30s | — | — | — |
| **48TM005174-DATA** | 60Hz | — | — | 3.4 | (1) Coast | 30s | 30s | — | — | — |
| **48TM005164-DATA** | 60Hz | — | — | 9.8 | (1) Coast | 30s | 30s | — | — | — |
| **48TM005173-DATA** | 60Hz | — | — | 4.9 | (1) Coast | 30s | 30s | — | — | — |
| **48TM005165-DATA** | 60Hz | — | — | 12.7 | (1) Coast | 30s | 30s | — | — | — |
| **48TM005168-DATA** | 60Hz | — | — | 6.4 | (1) Coast | 30s | 30s | — | — | — |
| **48TM005172-DATA** | 60Hz | — | — | 7.8 | (1) Coast | 30s | 30s | — | — | — |
| **48TM005167-DATA** | 60Hz | — | — | 3.8 | (1) Coast | 30s | 30s | — | — | — |

LEGEND

— = HVAC Default, field does not require change.

## Table 22 — ACS320 VFD Parameters, for 48/50 Units with I/O Flex Controls (cont)

| LOOKUP VARIABLE | EFB STATION ID | EFB BAUD RATE | EFB PARITY | COMM PROT SEL | RUN ENABLE | | CROSS REFERENCE | |
|---|---|---|---|---|---|---|---|---|
| VFD PARAMETERS | 5302 | 5303 | 5304 | 9802 | 1601 | 1608 | EM_PKG | CL_PKG |
| 48LC000604-DATA | 1 | 76.8kb/s | 8 NONE 1 | BACnet | DI-4 | DI-1 | N/A | N/A |
| 48LC000605-DATA | 1 | 76.8kb/s | 8 NONE 1 | BACnet | DI-4 | DI-1 | N/A | N/A |
| 48LC000607-DATA | 1 | 76.8kb/s | 8 NONE 1 | BACnet | DI-4 | DI-1 | N/A | N/A |
| 48LC000608-DATA | 1 | 76.8kb/s | 8 NONE 1 | BACnet | DI-4 | DI-1 | N/A | N/A |
| 48LC000610-DATA | 1 | 76.8kb/s | 8 NONE 1 | BACnet | DI-4 | DI-1 | N/A | N/A |
| 48LC000611-DATA | 1 | 76.8kb/s | 8 NONE 1 | BACnet | DI-4 | DI-1 | N/A | N/A |
| 48LC000613-DATA | 1 | 76.8kb/s | 8 NONE 1 | BACnet | DI-4 | DI-1 | N/A | N/A |
| 48LC000614-DATA | 1 | 76.8kb/s | 8 NONE 1 | BACnet | DI-4 | DI-1 | N/A | N/A |
| 48LC000616-DATA | 1 | 76.8kb/s | 8 NONE 1 | BACnet | DI-4 | DI-1 | N/A | N/A |
| 48LC000617-DATA | 1 | 76.8kb/s | 8 NONE 1 | BACnet | DI-4 | DI-1 | N/A | N/A |
| 48LC000619-DATA | 1 | 76.8kb/s | 8 NONE 1 | BACnet | DI-4 | DI-1 | N/A | N/A |
| 48LC000620-DATA | 1 | 76.8kb/s | 8 NONE 1 | BACnet | DI-4 | DI-1 | N/A | N/A |
| 48LC000622-DATA | 1 | 76.8kb/s | 8 NONE 1 | BACnet | DI-4 | DI-1 | N/A | N/A |
| 48LC000623-DATA | 1 | 76.8kb/s | 8 NONE 1 | BACnet | DI-4 | DI-1 | N/A | N/A |
| 48LC000625-DATA | 1 | 76.8kb/s | 8 NONE 1 | BACnet | DI-4 | DI-1 | N/A | N/A |
| 48LC000626-DATA | 1 | 76.8kb/s | 8 NONE 1 | BACnet | DI-4 | DI-1 | N/A | N/A |
| 48LC000628-DATA | 1 | 76.8kb/s | 8 NONE 1 | BACnet | DI-4 | DI-1 | N/A | N/A |
| 48LC000629-DATA | 1 | 76.8kb/s | 8 NONE 1 | BACnet | DI-4 | DI-1 | N/A | N/A |
| 48LC000631-DATA | 1 | 76.8kb/s | 8 NONE 1 | BACnet | DI-4 | DI-1 | N/A | N/A |
| 48LC000632-DATA | 1 | 76.8kb/s | 8 NONE 1 | BACnet | DI-4 | DI-1 | N/A | N/A |
| 48LC000634-DATA | 1 | 76.8kb/s | 8 NONE 1 | BACnet | DI-4 | DI-1 | N/A | N/A |
| 48LC000635-DATA | 1 | 76.8kb/s | 8 NONE 1 | BACnet | DI-4 | DI-1 | N/A | N/A |
| 48LC000637-DATA | 1 | 76.8kb/s | 8 NONE 1 | BACnet | DI-4 | DI-1 | N/A | N/A |
| 48LC000638-DATA | 1 | 76.8kb/s | 8 NONE 1 | BACnet | DI-4 | DI-1 | N/A | N/A |
| 48LC000640-DATA | 1 | 76.8kb/s | 8 NONE 1 | BACnet | DI-4 | DI-1 | N/A | N/A |
| 48LC000641-DATA | 1 | 76.8kb/s | 8 NONE 1 | BACnet | DI-4 | DI-1 | N/A | N/A |
| 48LC000644-DATA | 1 | 76.8kb/s | 8 NONE 1 | BACnet | DI-4 | DI-1 | N/A | N/A |
| 48LC000645-DATA | 1 | 76.8kb/s | 8 NONE 1 | BACnet | DI-4 | DI-1 | N/A | N/A |
| 48LC000647-DATA | 1 | 76.8kb/s | 8 NONE 1 | BACnet | DI-4 | DI-1 | N/A | N/A |
| 48LC000648-DATA | 1 | 76.8kb/s | 8 NONE 1 | BACnet | DI-4 | DI-1 | N/A | N/A |
| 48LC000650-DATA | 1 | 76.8kb/s | 8 NONE 1 | BACnet | DI-4 | DI-1 | N/A | N/A |
| 48LC000651-DATA | 1 | 76.8kb/s | 8 NONE 1 | BACnet | DI-4 | DI-1 | N/A | N/A |
| 48LC000653-DATA | 1 | 76.8kb/s | 8 NONE 1 | BACnet | DI-4 | DI-1 | N/A | N/A |
| 48LC000654-DATA | 1 | 76.8kb/s | 8 NONE 1 | BACnet | DI-4 | DI-1 | N/A | N/A |
| 48LC000664-DATA | 1 | 76.8kb/s | 8 NONE 1 | BACnet | DI-4 | DI-1 | N/A | N/A |
| 50HE002320-DATA | — | — | — | — | — | — | N/A | N/A |
| 50HE002324-DATA | — | — | — | — | — | — | N/A | N/A |
| 50HE002321-DATA | — | — | — | — | — | — | N/A | N/A |
| 50HE002325-DATA | — | — | — | — | — | — | N/A | N/A |
| 50HE002322-DATA | — | — | — | — | — | — | N/A | N/A |
| 50H4002326-DATA | — | — | — | — | — | — | N/A | N/A |
| 50HE002323-DATA | — | — | — | — | — | — | N/A | N/A |
| 50HE002327-DATA | — | — | — | — | — | — | N/A | N/A |
| 50HE002331-DATA | — | — | — | — | — | — | N/A | N/A |
| 50HE002333-DATA | — | — | — | — | — | — | N/A | N/A |
| 50HE003081-DATA | — | — | — | — | — | — | N/A | N/A |
| 50HE003082-DATA | — | — | — | — | — | — | N/A | N/A |
| 50HE003084-DATA | — | — | — | — | — | — | N/A | N/A |
| 50HE003085-DATA | — | — | — | — | — | — | N/A | N/A |
| 50HE003086-DATA | — | — | — | — | — | — | N/A | N/A |
| 50HE003087-DATA | — | — | — | — | — | — | N/A | N/A |
| 50HE003089-DATA | — | — | — | — | — | — | N/A | N/A |
| 50HE003090-DATA | — | — | — | — | — | — | N/A | N/A |
| 50HE003092-DATA | — | — | — | — | — | — | N/A | N/A |
| 50HE003093-DATA | — | — | — | — | — | — | N/A | N/A |
| 48TM005163-DATA | — | — | — | — | — | — | 48TM482532 | 48TM482683 |
| 48TM005166-DATA | — | — | — | — | — | — | 48TM482535 | 48TM482686 |
| 48TM005162-DATA | — | — | — | — | — | — | 48TM482531 | 48TM482682 |
| 48TM005174-DATA | — | — | — | — | — | — | 48TM482593 | 48TM482694 |
| 48TM005164-DATA | — | — | — | — | — | — | 48TM482533 | 48TM482684 |
| 48TM005173-DATA | — | — | — | — | — | — | 48TM482592 | 48TM482693 |
| 48TM005165-DATA | — | — | — | — | — | — | 48TM482534 | 48TM482685 |
| 48TM005168-DATA | — | — | — | — | — | — | 48TM482537 | 48TM482688 |
| 48TM005172-DATA | — | — | — | — | — | — | 48TM482591 | 48TM482692 |
| 48TM005167-DATA | — | — | — | — | — | — | 48TM482536 | 48TM482687 |

LEGEND

— = HVAC Default, field does not require change.

## Table 22 — ACS320 VFD Parameters, for 48/50 Units with I/O Flex Controls (cont)

| VFD PARAMETERS | PKG ABB ACS320 | MOTOR PART NUMBER | VFD PART NUMBER | DRIVE HP | DESC |
|---|---|---|---|---|---|
| **48TM005433-DATA** | 48TM005433 | HD56FR233 | HK30WA506 | 3 | SRT 3 HP 230 V |
| **48TM005436-DATA** | 48TM005436 | HD56FR463 | HK30WA512 | 3 | SRT 3 HP 460 V |
| **48TM005439-DATA** | 48TM005439 | HD58FE654 | HK30WA506 | 3 | SRT 3 HP 230 V |
| **48TM005437-DATA** | 48TM005437 | HD58FE654 | HK30WA512 | 3 | SRT 3 HP 230 V |
| **48TM005435-DATA** | 48TM005435 | HD60FK658 | HK30WA506 | 3 | SRT 3 HP 230 V |
| **48TM005438-DATA** | 48TM005438 | HD60FK658 | HK30WA514 | 7.5 | SRT 7.5 HP 230 V |
| **48TM005432-DATA** | 48TM005432 | HD56FE653 | HK30WA506 | 3 | SRT 3 HP 230 V |
| **48TM005441-DATA** | 48TM005441 | HD56FE653 | HK30WA512 | 3 | SRT 3 HP 230 V |
| **48TM005434-DATA** | 48TM005434 | HD60FE656 | HK30WA506 | 3 | SRT 3 HP 230 V |
| **48TM005440-DATA** | 48TM005440 | HD60FE656 | HK30WA517 | 5 | SRT 5 HP 230 V |
| **50TM001619-DATA** | 50TM001619 | HD56FE653 | HK30WA506 | — | N/A |
| **50TM001620-DATA** | 50TM001620 | HD56FE653 | HK30WA512 | — | N/A |
| **50TM001614-DATA** | 50TM001614 | HD58FE654 | HK30WA506 | — | N/A |
| **50TM001622-DATA** | 50TM001622 | HD58FE654 | HK30WA512 | — | N/A |
| **50TM001616-DATA** | 50TM001616 | HD60FK659 | HK30WA507 | — | N/A |
| **50TM001623-DATA** | 50TM001623 | HD60FK659 | HK30WA506 | — | N/A |
| **50TM001617-DATA** | 50TM001617 | HD60FE656 | HK30WA506 | — | N/A |
| **50TM001618-DATA** | 50TM001618 | HD60FE656 | HK30WA517 | — | N/A |

## Table 22 — ACS320 VFD Parameters, for 48/50 Units with I/O Flex Controls (cont)

| LOOKUP VARIABLE | VOLTAGE | N. AMPS | N. RPM | N. HP | EXT1 COMMANDS | EXT1/EXT2 SEL | REF1 SELECT | CONST SPEED SEL | CONST SPEED 1 | CONST SPEED 2 |
|---|---|---|---|---|---|---|---|---|---|---|
| **VFD PARAMETERS** | **9905** | **9906** | **9908** | **9909** | **1001** | **1102** | **1103** | **1201** | **1202** | **1203** |
| **48TM005433-DATA** | 230 | 5.6 | 1725 | 1.7 | 10 COMM | 8 COMM | 8 COMM | DI 3 | 40Hz | 60Hz |
| **48TM005436-DATA** | 460 | 2.9 | 1725 | 1.7 | 10 COMM | 8 COMM | 8 COMM | DI 3 | 40Hz | 60Hz |
| **48TM005439-DATA** | 230 | 7.8 | 1725 | 2.9 | 10 COMM | 8 COMM | 8 COMM | DI 3 | 40Hz | 60Hz |
| **48TM005437-DATA** | 230 | 7.8 | 1725 | 2.9 | 10 COMM | 8 COMM | 8 COMM | DI 3 | 40Hz | 60Hz |
| **48TM005435-DATA** | 230 | 12.7 | 1740 | 5.3 | 10 COMM | 8 COMM | 8 COMM | DI 3 | 40Hz | 60Hz |
| **48TM005438-DATA** | 230 | 12.7 | 1740 | 5.3 | 10 COMM | 8 COMM | 8 COMM | DI 3 | 40Hz | 60Hz |
| **48TM005432-DATA** | 230 | 6.8 | 1725 | 2.4 | 10 COMM | 8 COMM | 8 COMM | DI 3 | 40Hz | 60Hz |
| **48TM005441-DATA** | 230 | 6.8 | 1725 | 2.4 | 10 COMM | 8 COMM | 8 COMM | DI 3 | 40Hz | 60Hz |
| **48TM005434-DATA** | 230 | 9.8 | 1725 | 3.7 | 10 COMM | 8 COMM | 8 COMM | DI 3 | 40Hz | 60Hz |
| **48TM005440-DATA** | 230 | 9.8 | 1725 | 3.7 | 10 COMM | 8 COMM | 8 COMM | DI 3 | 40Hz | 60Hz |
| **50TM001619-DATA** | 230 | 6.8 | 1725 | 2.4 | 10 COMM | 8 COMM | 8 COMM | DI 3 | 40Hz | 60Hz |
| **50TM001620-DATA** | 460 | 6.8 | 1725 | 2.4 | 10 COMM | 8 COMM | 8 COMM | DI 3 | 40Hz | 60Hz |
| **50TM001614-DATA** | 230 | 7.8 | 1725 | 2.9 | 10 COMM | 8 COMM | 8 COMM | DI 3 | 40Hz | 60Hz |
| **50TM001622-DATA** | 460 | 7.8 | 1725 | 2.9 | 10 COMM | 8 COMM | 8 COMM | DI 3 | 40Hz | 60Hz |
| **50TM001616-DATA** | 230 | 12.6 | 1755 | 5 | 10 COMM | 8 COMM | 8 COMM | DI 3 | 40Hz | 60Hz |
| **50TM001623-DATA** | 460 | 6.3 | 1755 | 5 | 10 COMM | 8 COMM | 8 COMM | DI 3 | 40Hz | 60Hz |
| **50TM001617-DATA** | 230 | 9.8 | 1725 | 3.7 | 10 COMM | 8 COMM | 8 COMM | DI 3 | 40Hz | 60Hz |
| **50TM001618-DATA** | 460 | 9.8 | 1725 | 3.7 | 10 COMM | 8 COMM | 8 COMM | DI 3 | 40Hz | 60Hz |

## Table 22 — ACS320 VFD Parameters, for 48/50 Units with I/O Flex Controls (cont)

| LOOKUP VARIABLE | CONST SPEED 3 | CONST SPEED 4 | AO1 CONTENTS SEL | MAX AMPS | STOP FCN | ACCEL | DECEL | STATION ID | BAUD RATE | PARITY |
|---|---|---|---|---|---|---|---|---|---|---|
| **VFD PARAMETERS** | **1204** | **1205** | **1501** | **2003** | **2102** | **2202** | **2203** | **5201** | **5202** | **5203** |
| **48TM005433-DATA** | 60Hz | — | 102 Speed | 5.6 | Ramp | 30.0s | 30s | 1 | 9.6 kb/s | 8 NONE 1 |
| **48TM005436-DATA** | 60Hz | — | 102 Speed | 2.9 | Ramp | 30.0s | 30s | 1 | 9.6 kb/s | 8 NONE 1 |
| **48TM005439-DATA** | 60Hz | — | 102 Speed | 7.8 | Ramp | 30.0s | 30s | 1 | 9.6 kb/s | 8 NONE 1 |
| **48TM005437-DATA** | 60Hz | — | 102 Speed | 7.8 | Ramp | 30.0s | 30s | 1 | 9.6 kb/s | 8 NONE 1 |
| **48TM005435-DATA** | 60Hz | — | 102 Speed | 12.7 | Ramp | 30.0s | 30s | 1 | 9.6 kb/s | 8 NONE 1 |
| **48TM005438-DATA** | 60Hz | — | 102 Speed | 12.7 | Ramp | 30.0s | 30s | 1 | 9.6 kb/s | 8 NONE 1 |
| **48TM005432-DATA** | 60Hz | — | 102 Speed | 6.8 | Ramp | 30.0s | 30s | 1 | 9.6 kb/s | 8 NONE 1 |
| **48TM005441-DATA** | 60Hz | — | 102 Speed | 6.8 | Ramp | 30.0s | 30s | 1 | 9.6 kb/s | 8 NONE 1 |
| **48TM005434-DATA** | 60Hz | — | 102 Speed | 9.8 | Ramp | 30.0s | 30s | 1 | 9.6 kb/s | 8 NONE 1 |
| **48TM005440-DATA** | 60Hz | — | 102 Speed | 9.8 | Ramp | 30.0s | 30s | 1 | 9.6 kb/s | 8 NONE 1 |
| **50TM001619-DATA** | 60Hz | — | 102 Speed | 6.8 | Ramp | 30.0s | 30s | 1 | 9.6 kb/s | 8 NONE 1 |
| **50TM001620-DATA** | 60Hz | — | 102 Speed | 6.8 | Ramp | 30.0s | 30s | 1 | 9.6 kb/s | 8 NONE 1 |
| **50TM001614-DATA** | 60Hz | — | 102 Speed | 7.8 | Ramp | 30.0s | 30s | 1 | 9.6 kb/s | 8 NONE 1 |
| **50TM001622-DATA** | 60Hz | — | 102 Speed | 7.8 | Ramp | 30.0s | 30s | 1 | 9.6 kb/s | 8 NONE 1 |
| **50TM001616-DATA** | 60Hz | — | 102 Speed | 12.6 | Ramp | 30.0s | 30s | 1 | 9.6 kb/s | 8 NONE 1 |
| **50TM001623-DATA** | 60Hz | — | 102 Speed | 6.3 | Ramp | 30.0s | 30s | 1 | 9.6 kb/s | 8 NONE 1 |
| **50TM001617-DATA** | 60Hz | — | 102 Speed | 9.8 | Ramp | 30.0s | 30s | 1 | 9.6 kb/s | 8 NONE 1 |
| **50TM001618-DATA** | 60Hz | — | 102 Speed | 9.8 | Ramp | 30.0s | 30s | 1 | 9.6 kb/s | 8 NONE 1 |

LEGEND

— = HVAC Default, field does not require change.

## Table 22 — ACS320 VFD Parameters, for 48/50 Units with I/O Flex Controls (cont)

| LOOKUP VARIABLE | EFB STATION ID | EFB BAUD RATE | EFB PARITY | COMM PROT SEL | RUN ENABLE | | CROSS REFERENCE | |
|---|---|---|---|---|---|---|---|---|
| **VFD PARAMETERS** | **5302** | **5303** | **5304** | **9802** | **1601** | **1608** | **EM_PKG** | **CL_PKG** |
| **48TM005433-DATA** | — | — | — | 1 Std Modbus | DI-4 | DI-1 | N/A | N/A |
| **48TM005436-DATA** | — | — | — | 1 Std Modbus | DI-4 | DI-1 | N/A | N/A |
| **48TM005439-DATA** | — | — | — | 1 Std Modbus | DI-4 | DI-1 | N/A | N/A |
| **48TM005437-DATA** | — | — | — | 1 Std Modbus | DI-4 | DI-1 | N/A | N/A |
| **48TM005435-DATA** | — | — | — | 1 Std Modbus | DI-4 | DI-1 | N/A | N/A |
| **48TM005438-DATA** | — | — | — | 1 Std Modbus | DI-4 | DI-1 | N/A | N/A |
| **48TM005432-DATA** | — | — | — | 1 Std Modbus | DI-4 | DI-1 | N/A | N/A |
| **48TM005441-DATA** | — | — | — | 1 Std Modbus | DI-4 | DI-1 | N/A | N/A |
| **48TM005434-DATA** | — | — | — | 1 Std Modbus | DI-4 | DI-1 | N/A | N/A |
| **48TM005440-DATA** | — | — | — | 1 Std Modbus | DI-4 | DI-1 | N/A | N/A |
| **50TM001619-DATA** | — | — | — | 1 Std Modbus | DI-4 | DI-1 | N/A | N/A |
| **50TM001620-DATA** | — | — | — | 1 Std Modbus | DI-4 | DI-1 | N/A | N/A |
| **50TM001614-DATA** | — | — | — | 1 Std Modbus | DI-4 | DI-1 | N/A | N/A |
| **50TM001622-DATA** | — | — | — | 1 Std Modbus | DI-4 | DI-1 | N/A | N/A |
| **50TM001616-DATA** | — | — | — | 1 Std Modbus | DI-4 | DI-1 | N/A | N/A |
| **50TM001623-DATA** | — | — | — | 1 Std Modbus | DI-4 | DI-1 | N/A | N/A |
| **50TM001617-DATA** | — | — | — | 1 Std Modbus | DI-4 | DI-1 | N/A | N/A |
| **50TM001618-DATA** | — | — | — | 1 Std Modbus | DI-4 | DI-1 | N/A | N/A |

LEGEND

— = HVAC Default, field does not require change.

## Table 23 — ACS320 VFD Common Parameters for 40RU Units with Electromechanical Controls

| PARAMETERS | DESCRIPTION | SETTING ACS320 |
|---|---|---|
| **9802** | COMM PROT Sel | — |
| **9907** | Motor Nominal Frequency | 60Hz |
| **1001** | EXT1 Commands | — |
| **1102** | EXT1/EXT2 Sel | — |
| **1103** | REF 1 Select | — |
| **1201** | Const Speed Sel | DI 2,3 |
| **1202** | Const Speed 1 | 40Hz |
| **1203** | Const Speed 2 | 60Hz |
| **1204** | Const Speed 3 | 60Hz |
| **1205** | Const Speed 4 | — |
| **1401** | Relay Output 1 | (16) FLT/ALARM |
| **1403** | Relay Output 3 | — |
| **1501** | AO1 Content Sel | — |
| **1601** | Run Enable | — |
| **1608** | N/A | — |
| **1611** | Parameter View | 3 |
| **2007** | Minimum Frequency | 0.0 HZ |
| **2008** | Maximum Frequency | 60HZ |
| **2101** | Start FCN | (1) Auto |
| **2102** | Stop FCN | (1) Coast |
| **2201** | ACCEL/DECEL | (0) Not Sel |
| **2202** | ACCEL | 30s |
| **2203** | DECEL | 30s |
| **2603** | IR COMP Volt | 0 volts |
| **2606** | Switching Freq | 4 KHz |
| **3102** | Trial Time | 300.0s |
| **3103** | Delay Time | 6.0s |
| **3104** | AR Overcurrent | (1) Enabled |
| **5101** | FBA Type | — |
| **5201** | Station ID | — |
| **5202** | Baud Rate | — |
| **5203** | Parity | — |
| **5301** | EFB Protocol ID | — |
| **5302** | EFB Station ID | — |
| **5303** | EFB Baud Rate | — |
| **5304** | EFB Parity | — |
| **5305** | EFB CTRL Profile | — |

LEGEND

— = HVAC Default, field does not require change.

## Table 24 — ACS320 VFD Parameters, for 40RU Units with Electromechanical Controls

| VFD PARAMETERS | PKG ABB ACS320 | MOTOR PART NUMBER | VFD PART NUMBER | DRIVE HP | DESC |
|---|---|---|---|---|---|
| **40RU000130-DATA** | 40RU000130 | HD56FR233 | HK30WA523 | 3 | 40RU 1.7 HP 230V |
| **40RU000131-DATA** | 40RU000131 | HD56FR463 | HK30WA530 | 3 | 40RU 1.7 HP 460V |
| **40RU480011-DATA** | 40RU480011 | HD56FE653 | HK30WA523 | 3 | 40RU 2.4 HP 230V |
| **40RU480012-DATA** | 40RU480012 | HD56FE653 | HK30WA530 | 3 | 40RU 2.4 HP 460V |
| **40RU480014-DATA** | 40RU480014 | HD58FE654 | HK30WA523 | 3 | 40RU 2.9 HP 230V |
| **40RU480015-DATA** | 40RU480015 | HD58FE654 | HK30WA530 | 3 | 40RU 2.9 HP 460V |
| **40RU480016-DATA** | 40RU480016 | HD60FE656 | HK30WA523 | 5 | 40RU 3.7 HP 230V |
| **40RU480017-DATA** | 40RU480017 | HD60FE656 | HK30WA534 | 5 | 40RU 3.7 HP 460V |
| **40RU000133-DATA** | 40RU000133 | HD58FR236 | HK30WA523 | 5 | 40RU 3.7 HP 230V |
| **40RU000134-DATA** | 40RU000134 | HD58FR236 | HK30WA534 | 5 | 40RU 3.7 HP 460V |
| **40RU480002-DATA** | 40RU480002 | HD60FK657 | HK30WA524 | 7 | 5 40RU 5.0 HP 230V |
| **40RU480003-DATA** | 40RU480003 | HD60FK657 | HK30WA532 | 7 | 5 40RU 5.0 HP 460V |
| **40RU480005-DATA** | 40RU480005 | HD62FK654 | HK30WA524 | 7 | 5 40RU 7.5 HP 230V |
| **40RU480006-DATA** | 40RU480006 | HD62FK654 | HK30WA532 | 7 | 5 40RU 7.5 HP 460V |
| **40RU480008-DATA** | 40RU480008 | HD64FK654 | HK30WA525 | 10 | 40RU 10 HP 230V |
| **40RU480009-DATA** | 40RU480009 | HD64FK654 | HK30WA533 | 10 | 40RU 10 HP 460V |

## Table 24 — ACS320 VFD Parameters, for 40RU Units with Electromechanical Controls (cont)

| LOOKUP VARIABLE | VOLTAGE | N. AMPS | MOTOR NOM FREQ | N. RPM | N. HP | MAX AMPS | CROSS REFERENCE | |
|---|---|---|---|---|---|---|---|---|
| **VFD PARAMETERS** | **9905** | **9906** | **9907** | **9908** | **9909** | **2003** | **EM_PKG** | **CL_PKG** |
| **40RU000130-DATA** | 230 | 5.8 | 60Hz | 1725 | 1.7 | 6.7 | 40RU480130 | — |
| **40RU000131-DATA** | 460 | 2.9 | 60Hz | 1725 | 1.7 | 3.3 | 40RU480131 | — |
| **40RU480011-DATA** | 230 | 7.1 | 60Hz | 1725 | 2.4 | 8.2 | 40RU480011 | — |
| **40RU480012-DATA** | 460 | 3.4 | 60Hz | 1725 | 2.4 | 3.9 | 40RU480012 | — |
| **40RU480014-DATA** | 230 | 8.6 | 60Hz | 1725 | 2.9 | 9.9 | 40RU480014 | — |
| **40RU480015-DATA** | 460 | 3.8 | 60Hz | 1725 | 2.9 | 4.4 | 40RU480015 | — |
| **40RU480016-DATA** | 230 | 10.8 | 60Hz | 1725 | 3.7 | 12.4 | 40RU480016 | — |
| **40RU480017-DATA** | 460 | 4.9 | 60Hz | 1725 | 3.7 | 5.6 | 40RU480017 | — |
| **40RU000133-DATA** | 230 | 10.2 | 60Hz | 1725 | 3.7 | 11.7 | 40RU480133 | — |
| **40RU000134-DATA** | 460 | 4.8 | 60Hz | 1725 | 3.7 | 5.5 | 40RU480134 | — |
| **40RU480002-DATA** | 230 | 17 | 60Hz | 1760 | 5 | 19.6 | 40RU480002 | — |
| **40RU480003-DATA** | 460 | 7.6 | 60Hz | 1760 | 5 | 8.7 | 40RU480003 | — |
| **40RU480005-DATA** | 230 | 21.5 | 60Hz | 1760 | 7.5 | 24.7 | 40RU480005 | — |
| **40RU480006-DATA** | 460 | 14.3 | 60Hz | 1760 | 7.5 | 16.4 | 40RU480006 | — |
| **40RU480008-DATA** | 230 | 28 6 | 60Hz | 1755 | 10 | 32.2 | 40RU480008 | — |
| **40RU480009-DATA** | 460 | 15.2 | 60Hz | 1755 | 10 | 17.5 | 40RU480009 | — |

LEGEND

— = HVAC Default, field does not require change.

## Table 25 — ACS320 VFD Common Parameters for 40RU Units with I/O Flex Controls

| PARAMETERS | DESCRIPTION | SETTING ACS320 |
|---|---|---|
| **9802** | COMM PROT Sel | BACnet |
| **9907** | Motor Nominal Frequency | 60Hz |
| **9908** | N. RPM | 1725 |
| **1001** | EXT1 Commands | (1) DI1 |
| **1102** | EXT1/EXT2 Sel | EXT1 |
| **1103** | REF 1 Select | AI-1 |
| **1201** | Const Speed Sel | DI 2,3 |
| **1202** | Const Speed 1 | 40Hz |
| **1203** | Const Speed 2 | 60Hz |
| **1204** | Const Speed 3 | 60Hz |
| **1205** | Const Speed 4 | — |
| **1401** | Relay Output 1 | (16) FLT/ALARM |
| **1403** | Relay Output 3 | — |
| **1501** | AO1 Content Sel | 0103 OUTPUT FREQ |
| **1601** | RUN ENABLE | DI-1 |
| **1608** | N/A | — |
| **1611** | Parameter View | 3 |
| **2007** | Minimum Frequency | 0.0 HZ |
| **2008** | Maximum Frequency | 60HZ |
| **2101** | Start FCN | (1) Auto |
| **2102** | Stop FCN | (1) Coast |
| **2201** | ACCEL/DECEL | (0) Not Sel |
| **2202** | ACCEL | 30s |
| **2203** | DECEL | 10s |
| **2603** | IR COMP Volt | 0 volts |
| **2606** | Switching Freq | 4 KHz |
| **3102** | Trial Time | 300.0s |
| **3103** | Delay Time | 6.0s |
| **3104** | AR Overcurrent | (1) Enable |
| **5101** | FBA Type | — |
| **5201** | Station ID | — |
| **5202** | Baud Rate | — |
| **5203** | Parity | — |
| **5301** | EFB Protocol ID | — |
| **5302** | EFB Station ID | 1 |
| **5303** | EFB Baud Rate | 76.8kb/s |
| **5304** | EFB Parity | 8 NONE 1 |
| **5305** | EFB CTRL Profile | — |

LEGEND

**—** = HVAC Default, field does not require change.

## Table 26 — ACS320 VFD Parameters, for 40RU Units with I/O Flex Controls

| VFD PARAMETERS | PKG ABB ACS320 | MOTOR PART NUMBER | VFD PART NUMBER | DRIVE HP | DESC |
|---|---|---|---|---|---|
| **40RU000203-DATA** | 40RU000203 | HD56FR233 | HK30WA523 | 3 | 40RU 1.7 HP 230V |
| **40RU000204-DATA** | 40RU000204 | HD56FR463 | HK30WA530 | 3 | 40RU 1.7 HP 460V |
| **40RU000218-DATA** | 40RU000218 | HD56FE653 | HK30WA523 | 3 | 40RU 2.4 HP 230V |
| **40RU000219-DATA** | 40RU000219 | HD56FE653 | HK30WA530 | 3 | 40RU 2.4 HP 460V |
| **40RU000223-DATA** | 40RU000223 | HD60FE656 | HK30WA523 | 5 | 40RU 3.7 HP 230V |
| **40RU000224-DATA** | 40RU000224 | HD60FE656 | HK30WA534 | 5 | 40RU 3.7 HP 460V |
| **40RU000206-DATA** | 40RU000206 | HD58FR236 | HK30WA523 | 5 | 40RU 3.7 HP 230V |
| **40RU000207-DATA** | 40RU000207 | HD58FR236 | HK30WA534 | 5 | 40RU 3.7 HP 460V |

## Table 26 — ACS320 VFD Parameters, for 40RU Units with I/O Flex Controls (cont)

| LOOKUP VARIABLE | VOLTAGE | N. AMPS | N. HP | MAX AMPS | CROSS REFERENCE | |
|---|---|---|---|---|---|---|
| **VFD PARAMETERS** | **9905** | **9906** | **9909** | **2003** | **EM_PKG** | **CL_PKG** |
| **40RU000203-DATA** | 230 | 5.8 | 1.7 | 6.7 | 40RU480130 | — |
| **40RU000204-DATA** | 460 | 2.9 | 1.7 | 3.3 | 40RU480131 | — |
| **40RU000218-DATA** | 230 | 7.1 | 2.4 | 8.2 | 40RU480011 | — |
| **40RU000219-DATA** | 460 | 3.4 | 2.4 | 3.9 | 40RU480012 | — |
| **40RU000223-DATA** | 230 | 10.8 | 3.7 | 12.4 | 40RU480016 | — |
| **40RU000224-DATA** | 460 | 4.9 | 3.7 | 5.6 | 40RU480017 | — |
| **40RU000206-DATA** | 230 | 10.2 | 3.7 | 11.7 | 40RU480133 | — |
| **40RU000207-DATA** | 460 | 4.8 | 3.7 | 5.5 | 40RU480134 | — |

LEGEND

**—** = HVAC Default, field does not require change.

## Table 27 — ACH550/580 VFD Common Parameters for 48/50 Units with Electromechanical Controls

| PARAMETERS ACH550 / 580 | DESCRIPTION | SETTING ACH550 \| ACH580 |
|---|---|---|
| **9802 / 58.01** | COMM PROT Sel | — |
| **9907 / 99.08** | Motor Nominal Frequency | 60Hz |
| **1001 / 20.01** | EXT1 Commands | — |
| **1102 / 19.11** | EXT1/EXT2 Sel | — |
| **1103 / 28.11** | REF 1 Select | — |
| **1201 / 28.22** | Const Speed Sel | DI 2,3 |
| **1202 / 28.26** | Const Speed 1 | 40Hz |
| **1203 / 28.27** | Const Speed 2 | 60Hz |
| **1204 / 28.28** | Const Speed 3 | 60Hz |
| **1205 / 28.29** | Const Speed 4 | — |
| **1401 / 10.24** | Relay Output 1 | — |
| **1403 / 10.30** | Relay Output 3 | 16 FLT/Alarm \| FLT/ (14) Fault |
| **1501 / 13.12** | AO1 Content Sel | — |
| **1601 / 20.40** | Run Enable | — |
| **2007 / 30.13** | Minimum Frequency | 0Hz |
| **2008 / 30.14** | Maximum Frequency | 60Hz |
| **2101 / 21.19** | Start FCN | Auto \| Automatic |
| **2102 / 21.03** | Stop FCN | Ramp |
| **2201 / 28.71** | ACCEL/DECEL | Not Sel \| 0 |
| **2202 / 28.72** | ACCEL | 30s |
| **2203 / 28.73** | DECEL | 30s |
| **2606 / 97.01** | Switching Freq | 4kHz |
| **5101 / 51.01** | FBA Type | — |
| **5201 / 58.03** | Station ID | — |
| **5202 / 58.04** | Baud Rate | — |
| **5203 / 58.05** | Parity | — |
| **5301 / 58.25** | EFB Protocol ID | — |
| **5302 / 58.03** | EFB Station ID | — |
| **5303 / 58.04** | EFB Baud Rate | — |
| **5304 / 58.05** | EFB Parity | — |
| **5305 / 58.25** | EFB CTRL Profile | — |

## Table 28 — ACH550/580 VFD Parameters, for 48/50 Units with Electromechanical Controls

| VFD PARAMETERS | PKG ABB ACH550 | MOTOR PART NUMBER | VFD PART NUMBER ACH550 / ACH580 | DRIVE HP | DESC |
|---|---|---|---|---|---|
| **48TM482532-DATA** | 48TM482532 | HD56FR233 | HK30WA352 / HK30WB359 | 3 | SRT 1.7 HP 230V |
| **48TM482535-DATA** | 48TM482535 | HD56FR463 | HK30WA356 / HK30WB364 | 3 | SRT 1.7 HP 460V |
| **48TM482538-DATA** | 48TM482538 | HD56FR579 | HK30WA360 / HK30WB369 | 3 | SRT 1.7 HP 575V |
| **48TM482531-DATA** | 48TM482531 | HD56FE653 | HK30WA352 / HK30WB359 | 3 | SRT 2.4 HP 230V |
| **48TM482593-DATA** | 48TM482593 | HD56FE653 | HK30WA356 / HK30WB364 | 3 | SRT 2.4 HP 460V |
| **48TM482530-DATA** | 48TM482530 | HD56FE577 | HK30WA360 / HK30WB369 | 3 | SRT 2.4 HP 575V |
| **48TM482591-DATA** | 48TM482591 | HD58FE654 | HK30WA352 / HK30WB359 | 3 | SRT 2.9 HP 230V |
| **48TM482536-DATA** | 48TM482536 | HD58FE654 | HK30WA356 / HK30WB364 | 3 | SRT 2.9 HP 460V |
| **48TM482533-DATA** | 48TM482533 | HD60FE656 | HK30WA353 / HK30WB360 | 5 | SRT 3.7 HP 230V |
| **48TM482592-DATA** | 48TM482592 | HD60FE656 | HK30WA357 / HK30WB365 | 5 | SRT 3.7 HP 460V |
| **48TM482539-DATA** | 48TM482539 | HD58FE577 | HK30WA361 / HK30WB370 | 5 | SRT 3.7 HP 575V |
| **48TM482534-DATA** | 48TM482534 | HD60FK658 | HK30WA354 / HK30WB361 | 7.5 | SRT 5.3 HP 230V |
| **48TM482537-DATA** | 48TM482537 | HD60FK658 | HK30WA358 / HK30WB366 | 7.5 | SRT 5.3 HP 460V |
| **48TM482540-DATA** | 48TM482540 | HD60FE576 | HK30WA362 / HK30WB371 | 7.5 | SRT 5.3 HP 575V |
| **50TM480839-DATA** | 50TM480839 | HD56FE653 | HK30WA352 / HK30WB359 | 3 | STR 2.4 HP 230V |
| **50TM480840-DATA** | 50TM480840 | HD56FE653 | HK30WA356 / HK30WB364 | 3 | STR 2.4 HP 460V |
| **50TM480841-DATA** | 50TM480841 | HD56FE577 | HK30WA360 / HK30WB369 | 3 | STR 2.4 HP 575V |
| **50TM480822-DATA** | 50TM480822 | HD58FE654 | HK30WA352 / HK30WB359 | 3 | STR 2.9 HP 230V |
| **50TM480842-DATA** | 50TM480842 | HD58FE654 | HK30WA356 / HK30WB364 | 3 | STR 2.9 HP 460V |
| **50TM480837-DATA** | 50TM480837 | HD60FE656 | HK30WA353 / HK30WB360 | 5 | STR 3.7 HP 230V |
| **50TM480838-DATA** | 50TM480838 | HD60FE656 | HK30WA357 / HK30WB365 | 5 | STR 3.7 HP 460V |
| **50TM480821-DATA** | 50TM480821 | HD58FE577 | HK30WA361 / HK30WB370 | 5 | STR 3.7 HP 575V |
| **50TM480824-DATA** | 50TM480824 | HD60FK657 | HK30WA354 / HK30WB361 | 7.5 | STR 5.0 HP 230V |
| **50TM480843-DATA** | 50TM480843 | HD60FK657 | HK30WA358 / HK30WB366 | 7.5 | STR 5.0 HP 460V |
| **50TM480823-DATA** | 50TM480823 | HD60FK577 | HK30WA362 / HK30WB371 | 7.5 | STR 5.0 HP 575V |
| **50HE402582-DATA** | 50HE402582 | HD58FE654 | HK30WA352 / HK30WB359 | 3 | MRT 2.9 HP 230V |
| **50HE402587-DATA** | 50HE402587 | HD58FE654 | HK30WA356 / HK30WB364 | 3 | MRT 2.9 HP 460V |
| **50HE402583-DATA** | 50HE402583 | HD60FE656 | HK30WA353 / HK30WB360 | 5 | MRT 3.7 HP 230V |
| **50HE402588-DATA** | 50HE402588 | HD60FE656 | HK30WA357 / HK30WB365 | 5 | MRT 3.7 HP 460V |
| **50HE402592-DATA** | 50HE402592 | HD58FE577 | HK30WA361 / HK30WB370 | 5 | MRT 3.7 HP 575V |
| **50HE402584-DATA** | 50HE402584 | HD60FK657 | HK30WA354 / HK30WB361 | 7.5 | MRT 5.0 HP 230V |
| **50HE402589-DATA** | 50HE402589 | HD60FK657 | HK30WA358 / HK30WB366 | 7.5 | MRT 5.0 HP 460V |
| **50HE402593-DATA** | 50HE402593 | HD60FK577 | HK30WA362 / HK30WB371 | 7.5 | MRT 5.0 HP 575V |
| **50HE402585-DATA** | 50HE402585 | HD62FK654 | HK30WA354 / HK30WB361 | 7.5 | MRT 7.5 HP 230V |
| **50HE402590-DATA** | 50HE402590 | HD62FK654 | HK30WA358 / HK30WB366 | 7.5 | MRT 7.5 HP 460V |
| **50HE402594-DATA** | 50HE402594 | HD62FL576 | HK30WA362 / HK30WB371 | 7.5 | MRT 7.5 HP 575V |
| **50HE403636-DATA** | 50HE403636 | HD60FK658 | HK30WA354 / HK30WB361 | 7.5 | MRT 5.3 HP 230V |
| **50HE403637-DATA** | 50HE403637 | HD60FK658 | HK30WA358 / HK30WB366 | 7.5 | MRT 5.3 HP 460V |
| **50HE403638-DATA** | 50HE403638 | HD60FE576 | HK30WA362 / HK30WB371 | 7.5 | MRT 5.3 HP 575V |
| **50HE402586-DATA** | 50HE402586 | HD64FK654 | HK30WA355 / HK30WB362 | 10 | MRT 10.0 HP 230V |
| **50HE402591-DATA** | 50HE402591 | HD64FK654 | HK30WA359 / HK30WB367 | 10 | MRT 10.0 HP 460V |
| **50HE402595-DATA** | 50HE402595 | HD64FL576 | HK30WA363 / HK30WB372 | 10 | MRT 10.0 HP 575V |
| **50HE003083-DATA** | 50HE003083 | HD58FE577 | HK30WA361 / HK30WB370 | 5 | MRT 3.7 HP 575V |
| **50HE003088-DATA** | 50HE003088 | HD60FE576 | HK30WA362 / HK30WB371 | 7.5 | MRT 5.3 HP 575V |
| **50HE003091-DATA** | 50HE003091 | HD60FK577 | HK30WA362 / HK30WB371 | 7.5 | MRT 5.0 HP 575V |
| **50HE003094-DATA** | 50HE003094 | HD62FL576 | HK30WA362 / HK30WB371 | 7.5 | MRT 7.5 HP 575V |
| **48TM005169-DATA** | 48TM005169 | HD56FR579 | HK30WA360 / HK30WB369 | 3 | SRT 1.7 HP 575V |
| **48TM005161-DATA** | 48TM005161 | HD56FE577 | HK30WA360 / HK30WB369 | 3 | SRT 2.4 HP 575V |
| **48TM005170-DATA** | 48TM005170 | HD58FE577 | HK30WA361 / HK30WB370 | 5 | SRT 3.7 HP 575V |
| **50TM001601-DATA** | 50TM001601 | HD56FE577 | HK30WA360 / HK30WB369 | 3 | STR 2.4 HP 575V |
| **50TM001205-DATA** | 50TM001205 | HD58FE577 | HK30WA361 / HK30WB370 | 5 | STR 3.7 HP 575V |
| **50TM001207-DATA** | 50TM001207 | HD60FK577 | HK30WA362 / HK30WB371 | 7.5 | STR 5.0 HP 575V |

## Table 28 — ACH550/580 VFD Parameters, for 48/50 Units with Electromechanical Controls (cont)

| LOOKUP VARIABLE | VOLTAGE 550/580 | N. AMPS 550/580 | N. RPM 550/580 | N. HP 550/580 | MAX AMPS 550/580 | CROSS REFERENCE | |
|---|---|---|---|---|---|---|---|
| VFD PARAMETERS | 9905 / 99.07 | 9906 / 99.06 | 9908 / 99.09 | 9909 / 99.10 | 2003 / 30.17 | EM_PKG | CL_PKG |
| 48TM482532-DATA | 230 | 5.8 | 1725 | 1.7 | 6.7 | 48TM482532 | 48TM482683 |
| 48TM482535-DATA | 460 | 2.9 | 1725 | 1.7 | 3.3 | 48TM482535 | 48TM482686 |
| 48TM482538-DATA | 575 | 3.1 | 1725 | 1.7 | 3.6 | 48TM482538 | 48TM482689 |
| 48TM482531-DATA | 230 | 7.9 | 1725 | 2.4 | 9.1 | 48TM482531 | 48TM482682 |
| 48TM482593-DATA | 460 | 3.6 | 1725 | 2.4 | 4.1 | 48TM482593 | 48TM482694 |
| 48TM482530-DATA | 575 | 3.8 | 1725 | 2.4 | 4.4 | 48TM482530 | 48TM482681 |
| 48TM482591-DATA | 230 | 9.2 | 1725 | 2.9 | 10.6 | 48TM482591 | 48TM482692 |
| 48TM482536-DATA | 460 | 4.2 | 1725 | 2.9 | 4.8 | 48TM482536 | 48TM482687 |
| 48TM482533-DATA | 230 | 11.7 | 1725 | 3.7 | 13.5 | 48TM482533 | 48TM482684 |
| 48TM482592-DATA | 460 | 5.4 | 1725 | 3.7 | 6.2 | 48TM482592 | 48TM482693 |
| 48TM482539-DATA | 575 | 4.9 | 1725 | 3.7 | 5.6 | 48TM482539 | 48TM482690 |
| 48TM482534-DATA | 230 | 13.6 | 1740 | 5.3 | 15.6 | 48TM482534 | 48TM482685 |
| 48TM482537-DATA | 460 | 6.4 | 1740 | 5.3 | 7.4 | 48TM482537 | 48TM482688 |
| 48TM482540-DATA | 575 | 6 | 1725 | 5.3 | 6.9 | 48TM482540 | 48TM482691 |
| 50TM480839-DATA | 230 | 7.9 | 1725 | 2.4 | 9.1 | 50TM480839 | — |
| 50TM480840-DATA | 460 | 3.6 | 1725 | 2.4 | 4.1 | 50TM480840 | — |
| 50TM480841-DATA | 575 | 3.8 | 1725 | 2.4 | 4.4 | 50TM480841 | — |
| 50TM480822-DATA | 230 | 9.2 | 1725 | 2.9 | 10.6 | 50TM480822 | 50TM480915 |
| 50TM480842-DATA | 460 | 4.2 | 1725 | 2.9 | 4.8 | 50TM480842 | 50TM480916 |
| 50TM480837-DATA | 230 | 11.7 | 1725 | 3.7 | 13.5 | 50TM480837 | 50TM480917 |
| 50TM480838-DATA | 460 | 5.4 | 1725 | 3.7 | 6.2 | 50TM480838 | 50TM480918 |
| 50TM480821-DATA | 575 | 4.9 | 1725 | 3.7 | 5.6 | 50TM480821 | 50TM480919 |
| 50TM480824-DATA | 230 | 17.1 | 1760 | 5 | 19.7 | 50TM480824 | 50TM480921 |
| 50TM480843-DATA | 460 | 8.6 | 1760 | 5 | 9.9 | 50TM480843 | 50TM480922 |
| 50TM480823-DATA | 575 | 7.6 | 1745 | 5 | 8.7 | 50TM480823 | 50TM480920 |
| 50HE402582-DATA | 230 | 9.2 | 1725 | 2.9 | 10.6 | 50HE402582 | 50HE402817 |
| 50HE402587-DATA | 460 | 4.2 | 1725 | 2.9 | 4.8 | 50HE402587 | 50HE402822 |
| 50HE402583-DATA | 230 | 11.7 | 1725 | 3.7 | 13.5 | 50HE402583 | 50HE402818 |
| 50HE402588-DATA | 460 | 5.4 | 1725 | 3.7 | 6.2 | 50HE402588 | 50HE402823 |
| 50HE402592-DATA | 575 | 4.9 | 1725 | 3.7 | 5.6 | 50HE402592 | 50HE402827 |
| 50HE402584-DATA | 230 | 17.1 | 1760 | 5 | 19.7 | 50HE402584 | 50HE402819 |
| 50HE402589-DATA | 460 | 8.6 | 1760 | 5 | 9.9 | 50HE402589 | 50HE402824 |
| 50HE402593-DATA | 575 | 7.6 | 1745 | 5 | 8.7 | 50HE402593 | 50HE402828 |
| 50HE402585-DATA | 230 | 23.5 | 1760 | 7.5 | 27 | 50HE402585 | 50HE402820 |
| 50HE402590-DATA | 460 | 11.9 | 1760 | 7.5 | 13.7 | 50HE402590 | 50HE402825 |
| 50HE402594-DATA | 575 | 9 | 1750 | 7.5 | 10.4 | 50HE402594 | 50HE402829 |
| 50HE403636-DATA | 230 | 13.6 | 1740 | 5.3 | 15.6 | 50HE402584 | 50HE402819 |
| 50HE403637-DATA | 460 | 6.4 | 1740 | 5.3 | 7.4 | 50HE402589 | 50HE402824 |
| 50HE403638-DATA | 575 | 6 | 1725 | 5.3 | 6.9 | 50HE402593 | 50HE402828 |
| 50HE402586-DATA | 230 | 30.4 | 1755 | 10 | 35 | 50HE402586 | 50HE402821 |
| 50HE402591-DATA | 460 | 15.2 | 1755 | 10 | 17.5 | 50HE402591 | 50HE402826 |
| 50HE402595-DATA | 575 | 11 | 1755 | 10 | 12.7 | 50HE402595 | 50HE402830 |
| 50HE003083-DATA | 575 | 4.9 | 1725 | 3.7 | 5.6 | N/A | N/A |
| 50HE003088-DATA | 575 | 6 | 1725 | 5.3 | 6.9 | N/A | N/A |
| 50HE003091-DATA | 575 | 7.6 | 1745 | 5 | 8.7 | N/A | N/A |
| 50HE003094-DATA | 575 | 9 | 1750 | 7.5 | 10.4 | N/A | N/A |
| 48TM005169-DATA | 575 | 3.1 | 1725 | 1.7 | 3.6 | N/A | N/A |
| 48TM005161-DATA | 575 | 3.8 | 1725 | 2.4 | 4.4 | N/A | N/A |
| 48TM005170-DATA | 575 | 4.9 | 1725 | 3.7 | 5.6 | N/A | N/A |
| 50TM001601-DATA | 575 | 3.8 | 1725 | 2.4 | 4.4 | N/A | N/A |
| 50TM001205-DATA | 575 | 4.9 | 1725 | 3.7 | 5.6 | N/A | N/A |
| 50TM001207-DATA | 575 | 7.6 | 1745 | 5 | 8.7 | N/A | N/A |

## Table 29 — ACH550/580 VFD Common Parameters for 48/50 Units with I/O Flex Controls

| PARAMETERS 550 / 580 | DESCRIPTION | SETTING ACH550 \| ACH580 |
|---|---|---|
| **9907 / 99.08** | Motor Nominal Frequency | 60Hz |
| **1204 / 28.28** | Const Speed 3 | 60Hz |
| **2007 / 30.13** | Minimum Frequency | 0Hz |
| **2008 / 30.14** | Maximum Frequency | 60Hz |
| **2101 / 21.19** | Start FCN | Auto |
| **2201 / 28.71** | ACCEL/DECEL | Not Sel \| 0 |
| **2606 / 97.01** | Switching Freq | 4kHz |
| **5202 / 58.04** | Baud Rate | — |
| **5203 / 58.05** | Parity | — |
| **5301 / 58.25** | EFB Protocol ID | — |
| **5305 / 58.25** | EFB CTRL Profile | — |

LEGEND

— = HVAC Default, field does not require change.

## Table 30 — ACH550/580 VFD Parameters, for 48/50 Units with I/O Flex Controls

| VFD PARAMETERS[a] | PKG ABB ACH550 | MOTOR PART NUMBER | VFD PART NUMBER ACH550 / ACH580 | DRIVE HP | DESC |
|---|---|---|---|---|---|
| **48TM482815-DATA** | 48TM482815 | HD56FR233 | HK30WA352 / HK30WB359 | 3 | SRT 1.7 HP 230V |
| **48TM482819-DATA** | 48TM482819 | HD56FR463 | HK30WA356 / HK30WB364 | 3 | SRT 1.7 HP 460V |
| **48TM482821-DATA** | 48TM482821 | HD56FR579 | HK30WA360 / HK30WB369 | 3 | SRT 1.7 HP 575V |
| **48TM482814-DATA** | 48TM482814 | HD56FE653 | HK30WA352 / HK30WB359 | 3 | SRT 2.4 HP 230V |
| **48TM482825-DATA** | 48TM482825 | HD56FE653 | HK30WA356 / HK30WB364 | 3 | SRT 2.4 HP 460V |
| **48TM482813-DATA** | 48TM482813 | HD56FE577 | HK30WA360 / HK30WB369 | 3 | SRT 2.4 HP 575V |
| **48TM000640-DATA** | 48TM000640 | HD58FE654 | HK30WA352 / HK30WB359 | 3 | SRT 2.9 HP 230V |
| **48TM000641-DATA** | 48TM000641 | HD58FE654 | HK30WA356 / HK30WB364 | 3 | SRT 2.9 HP 460V |
| **48TM482817-DATA** | 48TM482817 | HD60FE656 | HK30WA353 / HK30WB360 | 5 | SRT 3.7 HP 230V |
| **48TM482824-DATA** | 48TM482824 | HD60FE656 | HK30WA357 / HK30WB365 | 5 | SRT 3.7 HP 460V |
| **48TM482822-DATA** | 48TM482822 | HD58FE577 | HK30WA361 / HK30WB370 | 5 | SRT 3.7 HP 575V |
| **48TM482818-DATA** | 48TM482818 | HD60FK658 | HK30WA354 / HK30WB361 | 7.5 | SRT 5.3 HP 230V |
| **48TM482820-DATA** | 48TM482820 | HD60FK658 | HK30WA358 / HK30WB366 | 7.5 | SRT 5.3 HP 460V |
| **48TM482823-DATA** | 48TM482823 | HD60FE576 | HK30WA362 / HK30WB371 | 7.5 | SRT 5.3 HP 575V |
| **50TM480969-DATA** | 50TM480969 | HD58FE654 | HK30WA352 / HK30WB359 | 3 | STR 2.9 HP 230V |
| **50TM480977-DATA** | 50TM480977 | HD58FE654 | HK30WA356 / HK30WB364 | 3 | STR 2.9 HP 460V |
| **50TM480972-DATA** | 50TM480972 | HD60FE656 | HK30WA353 / HK30WB360 | 5 | STR 3.7 HP 230V |
| **50TM480973-DATA** | 50TM480973 | HD60FE656 | HK30WA357 / HK30WB365 | 5 | STR 3.7 HP 460V |
| **50TM480968-DATA** | 50TM480968 | HD58FE577 | HK30WA361 / HK30WB370 | 5 | STR 3.7 HP 575V |
| **50TM480971-DATA** | 50TM480971 | HD60FK657 | HK30WA354 / HK30WB361 | 7.5 | STR 5.0 HP 230V |
| **50TM480978-DATA** | 50TM480978 | HD60FK657 | HK30WA358 / HK30WB366 | 7.5 | STR 5.0 HP 460V |
| **50TM480970-DATA** | 50TM480970 | HD60FK577 | HK30WA362 / HK30WB371 | 7.5 | STR 5.0 HP 575V |
| **50HE403471-DATA** | 50HE403471 | HD58FE654 | HK30WA352 / HK30WB359 | 3 | MRT 2.9 HP 230V |
| **50HE403559-DATA** | 50HE403559 | HD58FE654 | HK30WA356 / HK30WB364 | 3 | MRT 2.9 HP 460V |
| **50HE403537-DATA** | 50HE403537 | HD60FE656 | HK30WA353 / HK30WB360 | 5 | MRT 3.7 HP 230V |
| **50HE403514-DATA** | 50HE403514 | HD60FE656 | HK30WA357 / HK30WB365 | 5 | MRT 3.7 HP 460V |
| **50HE403561-DATA** | 50HE403561 | HD58FE577 | HK30WA361 / HK30WB370 | 5 | MRT 3.7 HP 575V |
| **50HE403538-DATA** | 50HE403538 | HD60FK657 | HK30WA354 / HK30WB361 | 7.5 | MRT 5.0 HP 230V |
| **50HE403468-DATA** | 50HE403468 | HD60FK657 | HK30WA358 / HK30WB366 | 7.5 | MRT 5.0 HP 460V |
| **50HE403562-DATA** | 50HE403562 | HD60FK577 | HK30WA362 / HK30WB371 | 7.5 | MRT 5.0 HP 575V |
| **50HE403557-DATA** | 50HE403557 | HD62FK654 | HK30WA354 / HK30WB361 | 7.5 | MRT 7.5 HP 230V |
| **50HE403515-DATA** | 50HE403515 | HD62FK654 | HK30WA358 / HK30WB366 | 7.5 | MRT 7.5 HP 460V |
| **50HE403563-DATA** | 50HE403563 | HD62FL576 | HK30WA362 / HK30WB371 | 7.5 | MRT 7.5 HP 575V |
| **50HE403642-DATA** | 50HE403642 | HD60FK658 | HK30WA354 / HK30WB361 | 7.5 | MRT 5.3 HP 230V |
| **50HE403643-DATA** | 50HE403643 | HD60FK658 | HK30WA358 / HK30WB366 | 7.5 | MRT 5.3 HP 460V |
| **50HE403644-DATA** | 50HE403644 | HD60FE576 | HK30WA362 / HK30WB371 | 7.5 | MRT 5.3 HP 575V |
| **50HE403558-DATA** | 50HE403558 | HD64FK654 | HK30WA355 / HK30WB362 | 10 | MRT 10.0 HP 230V |
| **50HE403560-DATA** | 50HE403560 | HD64FK654 | HK30WA359 / HK30WB367 | 10 | MRT 10.0 HP 460V |
| **50HE403564-DATA** | 50HE403564 | HD64FL576 | HK30WA363 / HK30WB372 | 10 | MRT 10.0 HP 575V |
| **48TM001419-DATA** | 48TM001419 | HD56FR233 | HK30WA045 / HK30WB303 | 2 | SRT 1.7 HP 230V |
| **48TM001420-DATA** | 48TM001420 | HD56FR463 | HK30WA046 / HK30WB319 | 2 | SRT 1.7 HP 460V |
| **48TM001418-DATA** | 48TM001418 | HD56FR579 | HK30WA048 / HK30WB340 | 3 | SRT 1.7 HP 575V |
| **48TM001422-DATA** | 48TM001422 | HD56FE653 | HK30WA001 / HK30WB304 | 3 | SRT 2.4 HP 230V |
| **48TM001423-DATA** | 48TM001423 | HD56FE653 | HK30WA008 / HK30WB320 | 3 | SRT 2.4 HP 460V |
| **48TM001421-DATA** | 48TM001421 | HD56FE577 | HK30WA048 / HK30WB340 | 3 | SRT 2.4 HP 575V |
| **48TM001425-DATA** | 48TM001425 | HD56FR233 | HK30WA045 / HK30WB303 | 2 | SRT 1.7 HP 230V |
| **48TM001426-DATA** | 48TM001426 | HD56FR463 | HK30WA046 / HK30WB319 | 2 | SRT 1.7 HP 460V |
| **48TM001424-DATA** | 48TM001424 | HD56FR579 | HK30WA048 / HK30WB340 | 3 | SRT 1.7 HP 575V |
| **48TM001427-DATA** | 48TM001427 | HD56FE577 | HK30WA048 / HK30WB340 | 3 | SRT 2.4 HP 575V |
| **48TM001428-DATA** | 48TM001428 | HD58FE654 | HK30WA001 / HK30WB304 | 3 | SRT 2.9 HP 230V |
| **48TM001429-DATA** | 48TM001429 | HD58FE654 | HK30WA008 / HK30WB320 | 3 | SRT 2.9 HP 460V |
| **48TM001430-DATA** | 48TM001430 | HD58FE577 | HK30WA021 / HK30WB341 | 5 | SRT 3.7 HP 575V |
| **48TM001431-DATA** | 48TM001431 | HD58FE654 | HK30WA001 / HK30WB304 | 3 | SRT 2.9 HP 230V |
| **48TM001432-DATA** | 48TM001432 | HD58FE654 | HK30WA008 / HK30WB320 | 3 | SRT 2.9 HP 460V |
| **48TM001124-DATA** | 48TM001124 | HD56FR233 | HK30WA001 / HK30WB304 | 3 | SRT 1.7 HP 230V |
| **48TM001127-DATA** | 48TM001127 | HD56FR463 | HK30WA008 / HK30WB320 | 3 | SRT 1.7 HP 460V |
| **48TM001133-DATA** | 48TM001133 | HD58FE654 | HK30WA001 / HK30WB304 | 3 | SRT 2.9 HP 230V |
| **48TM001128-DATA** | 48TM001128 | HD58FE654 | HK30WA008 / HK30WB320 | 3 | SRT 2.9 HP 460V |
| **48TM001125-DATA** | 48TM001125 | HD60FE656 | HK30WA002 / HK30WB305 | 5 | SRT 3.7 HP 230V |
| **48TM001134-DATA** | 48TM001134 | HD60FE656 | HK30WA009 / HK30WB321 | 5 | SRT 3.7 HP 460V |
| **48TM001131-DATA** | 48TM001131 | HD58FE577 | HK30WA021 / HK30WB341 | 5 | SRT 3.7 HP 575V |
| **48TM001126-DATA** | 48TM001126 | HD60FK658 | HK30WA003 / HK30WB306 | 7.5 | SRT 4.9 HP 230V |
| **48TM001129-DATA** | 48TM001129 | HD60FK658 | HK30WA010 / HK30WB322 | 7.5 | SRT 4.9 HP 460V |
| **48TM001132-DATA** | 48TM001132 | HD60FE576 | HK30WA335 / HK30WB342 | 7.5 | SRT 4.7 HP 575V |

NOTE(S):

a. VFD Parameters 48TM001122-DATA thru 48LC000655-DATA begin on page 62.

## Table 30 — ACH550/580 VFD Parameters, for 48/50 Units with I/O Flex Controls (cont)

| LOOKUP VARIABLE | VOLTAGE | N. AMPS | N. RPM | N. HP | EXT1 COMMANDS 550/580 | EXT1/EXT2 SEL 550/580 |
|---|---|---|---|---|---|---|
| **VFD PARAMETERS** | **9905/ 99.07** | **9906 / 99.06** | **9908/ 99.09** | **9909 / 99.10** | **1001 / 20.01** | **1102 / 19.11** |
| **48TM482815-DATA** | 230 | 5.8 | 1725 | 1.7 | — | — |
| **48TM482819-DATA** | 460 | 2.9 | 1725 | 1.7 | — | — |
| **48TM482821-DATA** | 575 | 3.1 | 1725 | 1.7 | — | — |
| **48TM482814-DATA** | 230 | 7.9 | 1725 | 2.4 | — | — |
| **48TM482825-DATA** | 460 | 3.6 | 1725 | 2.4 | — | — |
| **48TM482813-DATA** | 575 | 3.8 | 1725 | 2.4 | — | — |
| **48TM000640-DATA** | 230 | 9.2 | 1725 | 2.9 | — | — |
| **48TM000641-DATA** | 460 | 4.2 | 1725 | 2.9 | — | — |
| **48TM482817-DATA** | 230 | 11.7 | 1725 | 3.7 | — | — |
| **48TM482824-DATA** | 460 | 5.4 | 1725 | 3.7 | — | — |
| **48TM482822-DATA** | 575 | 4.9 | 1725 | 3.7 | — | — |
| **48TM482818-DATA** | 230 | 13.6 | 1740 | 5.3 | — | — |
| **48TM482820-DATA** | 460 | 6.4 | 1740 | 5.3 | — | — |
| **48TM482823-DATA** | 575 | 6 | 1725 | 5.3 | — | — |
| **50TM480969-DATA** | 230 | 9.2 | 1725 | 2.9 | — | — |
| **50TM480977-DATA** | 460 | 4.2 | 1725 | 2.9 | — | — |
| **50TM480972-DATA** | 230 | 11.7 | 1725 | 3.7 | — | — |
| **50TM480973-DATA** | 460 | 5.4 | 1725 | 3.7 | — | — |
| **50TM480968-DATA** | 575 | 4.9 | 1725 | 3.7 | — | — |
| **50TM480971-DATA** | 230 | 17.1 | 1760 | 5 | — | — |
| **50TM480978-DATA** | 460 | 8.6 | 1760 | 5 | — | — |
| **50TM480970-DATA** | 575 | 7.6 | 1745 | 5 | — | — |
| **50HE403471-DATA** | 230 | 9.2 | 1725 | 2.9 | — | — |
| **50HE403559-DATA** | 460 | 4.2 | 1725 | 2.9 | — | — |
| **50HE403537-DATA** | 230 | 11.7 | 1725 | 3.7 | — | — |
| **50HE403514-DATA** | 460 | 5.4 | 1725 | 3.7 | — | — |
| **50HE403561-DATA** | 575 | 4.9 | 1725 | 3.7 | — | — |
| **50HE403538-DATA** | 230 | 17.1 | 1760 | 5 | — | — |
| **50HE403468-DATA** | 460 | 8.6 | 1760 | 5 | — | — |
| **50HE403562-DATA** | 575 | 7.6 | 1745 | 5 | — | — |
| **50HE403557-DATA** | 230 | 23.5 | 1760 | 7.5 | — | — |
| **50HE403515-DATA** | 460 | 11.9 | 1760 | 7.5 | — | — |
| **50HE403563-DATA** | 575 | 9 | 1750 | 7.5 | — | — |
| **50HE403642-DATA** | 230 | 13.6 | 1740 | 5.3 | — | — |
| **50HE403643-DATA** | 460 | 6.4 | 1740 | 5.3 | — | — |
| **50HE403644-DATA** | 575 | 6 | 1725 | 5.3 | — | — |
| **50HE403558-DATA** | 230 | 30.4 | 1755 | 10 | — | — |
| **50HE403560-DATA** | 460 | 15.2 | 1755 | 10 | — | — |
| **50HE403564-DATA** | 575 | 11 | 1755 | 10 | — | — |
| **48TM001419-DATA** | 230 | 5.8 | 1725 | 1.7 | 10 COMM /14 - Emb. Fieldbus | 8 COMM / 32-EFB MCW bit 11 |
| **48TM001420-DATA** | 460 | 2.9 | 1725 | 1.7 | 10 COMM /14 - Emb. Fieldbus | 8 COMM / 32-EFB MCW bit 11 |
| **48TM001418-DATA** | 575 | 3.1 | 1725 | 1.7 | 10 COMM /14 - Emb. Fieldbus | 8 COMM / 32-EFB MCW bit 11 |
| **48TM001422-DATA** | 230 | 7.9 | 1725 | 2.4 | 10 COMM /14 - Emb. Fieldbus | 8 COMM / 32-EFB MCW bit 11 |
| **48TM001423-DATA** | 460 | 3.6 | 1725 | 2.4 | 10 COMM /14 - Emb. Fieldbus | 8 COMM / 32-EFB MCW bit 11 |
| **48TM001421-DATA** | 575 | 3.8 | 1725 | 2.4 | 10 COMM /14 - Emb. Fieldbus | 8 COMM / 32-EFB MCW bit 11 |
| **48TM001425-DATA** | 230 | 5.8 | 1725 | 1.7 | 10 COMM /14 - Emb. Fieldbus | 8 COMM / 32-EFB MCW bit 11 |
| **48TM001426-DATA** | 460 | 2.9 | 1725 | 1.7 | 10 COMM /14 - Emb. Fieldbus | 8 COMM / 32-EFB MCW bit 11 |
| **48TM001424-DATA** | 575 | 3.1 | 1725 | 1.7 | 10 COMM /14 - Emb. Fieldbus | 8 COMM / 32-EFB MCW bit 11 |
| **48TM001427-DATA** | 575 | 3.8 | 1725 | 2.4 | 10 COMM /14 - Emb. Fieldbus | 8 COMM / 32-EFB MCW bit 11 |
| **48TM001428-DATA** | 230 | 9.2 | 1725 | 2.9 | 10 COMM /14 - Emb. Fieldbus | 8 COMM / 32-EFB MCW bit 11 |
| **48TM001429-DATA** | 460 | 4.2 | 1725 | 2.9 | 10 COMM /14 - Emb. Fieldbus | 8 COMM / 32-EFB MCW bit 11 |
| **48TM001430-DATA** | 575 | 4.9 | 1725 | 3.7 | 10 COMM /14 - Emb. Fieldbus | 8 COMM / 32-EFB MCW bit 11 |
| **48TM001431-DATA** | 230 | 9.2 | 1725 | 2.9 | 10 COMM /14 - Emb. Fieldbus | 8 COMM / 32-EFB MCW bit 11 |
| **48TM001432-DATA** | 460 | 4.2 | 1725 | 2.9 | 10 COMM /14 - Emb. Fieldbus | 8 COMM / 32-EFB MCW bit 11 |
| **48TM001124-DATA** | 230 | 5.8 | 1725 | 1.7 | 10 COMM /14 - Emb. Fieldbus | 8 COMM / 32-EFB MCW bit 11 |
| **48TM001127-DATA** | 460 | 2.9 | 1725 | 1.7 | 10 COMM /14 - Emb. Fieldbus | 8 COMM / 32-EFB MCW bit 11 |
| **48TM001133-DATA** | 230 | 9.2 | 1725 | 2.9 | 10 COMM /14 - Emb. Fieldbus | 8 COMM / 32-EFB MCW bit 11 |
| **48TM001128-DATA** | 460 | 4.2 | 1725 | 2.9 | 10 COMM /14 - Emb. Fieldbus | 8 COMM / 32-EFB MCW bit 11 |
| **48TM001125-DATA** | 230 | 11.7 | 1725 | 3.7 | 10 COMM /14 - Emb. Fieldbus | 8 COMM / 32-EFB MCW bit 11 |
| **48TM001134-DATA** | 460 | 5.4 | 1725 | 3.7 | 10 COMM /14 - Emb. Fieldbus | 8 COMM / 32-EFB MCW bit 11 |
| **48TM001131-DATA** | 575 | 4.9 | 1725 | 3.7 | 10 COMM /14 - Emb. Fieldbus | 8 COMM / 32-EFB MCW bit 11 |
| **48TM001126-DATA** | 230 | 13.6 | 1740 | 5.3 | 10 COMM /14 - Emb. Fieldbus | 8 COMM / 32-EFB MCW bit 11 |
| **48TM001129-DATA** | 460 | 6.4 | 1740 | 5.3 | 10 COMM /14 - Emb. Fieldbus | 8 COMM / 32-EFB MCW bit 11 |
| **48TM001132-DATA** | 575 | 6 | 1725 | 5.3 | 10 COMM /14 - Emb. Fieldbus | 8 COMM / 32-EFB MCW bit 11 |

LEGEND

— = HVAC Default, field does not require change.

## Table 30 — ACH550/580 VFD Parameters, for 48/50 Units with I/O Flex Controls (cont)

| LOOKUP VARIABLE | REF1 SELECT 550/580 | CONST SPEED SEL 550/580 | CONST SPEED 1 550/580 | CONST SPEED 2 550/580 | CONST SPEED 3 550/580 | CONST SPEED 4 550/580 | RELAY OUT 1 550/580 |
|---|---|---|---|---|---|---|---|
| **VFD PARAMETERS** | **1103 / 28.11** | **1201 / 28.22** | **1202 / 28.26** | **1203 / 28.27** | **1204 / 28.28** | **1205 / 28.29** | **1401 / 10.24** |
| **48TM482815-DATA** | — | DI 3 | 40Hz | 60Hz | 60Hz | — | — |
| **48TM482819-DATA** | — | DI 3 | 40Hz | 60Hz | 60Hz | — | — |
| **48TM482821-DATA** | — | DI 3 | 40Hz | 60Hz | 60Hz | — | — |
| **48TM482814-DATA** | — | DI 3 | 40Hz | 60Hz | 60Hz | — | — |
| **48TM482825-DATA** | — | DI 3 | 40Hz | 60Hz | 60Hz | — | — |
| **48TM482813-DATA** | — | DI 3 | 40Hz | 60Hz | 60Hz | — | — |
| **48TM000640-DATA** | — | DI 3 | 40Hz | 60Hz | 60Hz | — | — |
| **48TM000641-DATA** | — | DI 3 | 40Hz | 60Hz | 60Hz | — | — |
| **48TM482817-DATA** | — | DI 3 | 40Hz | 60Hz | 60Hz | — | — |
| **48TM482824-DATA** | — | DI 3 | 40Hz | 60Hz | 60Hz | — | — |
| **48TM482822-DATA** | — | DI 3 | 40Hz | 60Hz | 60Hz | — | — |
| **48TM482818-DATA** | — | DI 3 | 40Hz | 60Hz | 60Hz | — | — |
| **48TM482820-DATA** | — | DI 3 | 40Hz | 60Hz | 60Hz | — | — |
| **48TM482823-DATA** | — | DI 3 | 40Hz | 60Hz | 60Hz | — | — |
| **50TM480969-DATA** | — | DI 3 | 40Hz | 60Hz | 60Hz | — | — |
| **50TM480977-DATA** | — | DI 3 | 40Hz | 60Hz | 60Hz | — | — |
| **50TM480972-DATA** | — | DI 3 | 40Hz | 60Hz | 60Hz | — | — |
| **50TM480973-DATA** | — | DI 3 | 40Hz | 60Hz | 60Hz | — | — |
| **50TM480968-DATA** | — | DI 3 | 40Hz | 60Hz | 60Hz | — | — |
| **50TM480971-DATA** | — | DI 3 | 40Hz | 60Hz | 60Hz | — | — |
| **50TM480978-DATA** | — | DI 3 | 40Hz | 60Hz | 60Hz | — | — |
| **50TM480970-DATA** | — | DI 3 | 40Hz | 60Hz | 60Hz | — | — |
| **50HE403471-DATA** | — | DI 3 | 40Hz | 60Hz | 60Hz | — | — |
| **50HE403559-DATA** | — | DI 3 | 40Hz | 60Hz | 60Hz | — | — |
| **50HE403537-DATA** | — | DI 3 | 40Hz | 60Hz | 60Hz | — | — |
| **50HE403514-DATA** | — | DI 3 | 40Hz | 60Hz | 60Hz | — | — |
| **50HE403561-DATA** | — | DI 3 | 40Hz | 60Hz | 60Hz | — | — |
| **50HE403538-DATA** | — | DI 3 | 40Hz | 60Hz | 60Hz | — | — |
| **50HE403468-DATA** | — | DI 3 | 40Hz | 60Hz | 60Hz | — | — |
| **50HE403562-DATA** | — | DI 3 | 40Hz | 60Hz | 60Hz | — | — |
| **50HE403557-DATA** | — | DI 3 | 40Hz | 60Hz | 60Hz | — | — |
| **50HE403515-DATA** | — | DI 3 | 40Hz | 60Hz | 60Hz | — | — |
| **50HE403563-DATA** | — | DI 3 | 40Hz | 60Hz | 60Hz | — | — |
| **50HE403642-DATA** | — | DI 3 | 40Hz | 60Hz | 60Hz | — | — |
| **50HE403643-DATA** | — | DI 3 | 40Hz | 60Hz | 60Hz | — | — |
| **50HE403644-DATA** | — | DI 3 | 40Hz | 60Hz | 60Hz | — | — |
| **50HE403558-DATA** | — | DI 3 | 40Hz | 60Hz | 60Hz | — | — |
| **50HE403560-DATA** | — | DI 3 | 40Hz | 60Hz | 60Hz | — | — |
| **50HE403564-DATA** | — | DI 3 | 40Hz | 60Hz | 60Hz | — | — |
| **48TM001419-DATA** | 8 COMM / 8-EFB ref1 | DI 3 | 40Hz | 60Hz | 60Hz | — | — |
| **48TM001420-DATA** | 8 COMM / 8-EFB ref1 | DI 3 | 40Hz | 60Hz | 60Hz | — | — |
| **48TM001418-DATA** | 8 COMM / 8-EFB ref1 | DI 3 | 40Hz | 60Hz | 60Hz | — | — |
| **48TM001422-DATA** | 8 COMM / 8-EFB ref1 | DI 3 | 40Hz | 60Hz | 60Hz | — | — |
| **48TM001423-DATA** | 8 COMM / 8-EFB ref1 | DI 3 | 40Hz | 60Hz | 60Hz | — | — |
| **48TM001421-DATA** | 8 COMM / 8-EFB ref1 | DI 3 | 40Hz | 60Hz | 60Hz | — | — |
| **48TM001425-DATA** | 8 COMM / 8-EFB ref1 | DI 3 | 40Hz | 60Hz | 60Hz | — | — |
| **48TM001426-DATA** | 8 COMM / 8-EFB ref1 | DI 3 | 40Hz | 60Hz | 60Hz | — | — |
| **48TM001424-DATA** | 8 COMM / 8-EFB ref1 | DI 3 | 40Hz | 60Hz | 60Hz | — | — |
| **48TM001427-DATA** | 8 COMM / 8-EFB ref1 | DI 3 | 40Hz | 60Hz | 60Hz | — | — |
| **48TM001428-DATA** | 8 COMM / 8-EFB ref1 | DI 3 | 40Hz | 60Hz | 60Hz | — | — |
| **48TM001429-DATA** | 8 COMM / 8-EFB ref1 | DI 3 | 40Hz | 60Hz | 60Hz | — | — |
| **48TM001430-DATA** | 8 COMM / 8-EFB ref1 | DI 3 | 40Hz | 60Hz | 60Hz | — | — |
| **48TM001431-DATA** | 8 COMM / 8-EFB ref1 | DI 3 | 40Hz | 60Hz | 60Hz | — | — |
| **48TM001432-DATA** | 8 COMM / 8-EFB ref1 | DI 3 | 40Hz | 60Hz | 60Hz | — | — |
| **48TM001124-DATA** | 8 COMM / 8-EFB ref1 | DI 3 | 40Hz | 60Hz | 60Hz | — | — |
| **48TM001127-DATA** | 8 COMM / 8-EFB ref1 | DI 3 | 40Hz | 60Hz | 60Hz | — | — |
| **48TM001133-DATA** | 8 COMM / 8-EFB ref1 | DI 3 | 40Hz | 60Hz | 60Hz | — | — |
| **48TM001128-DATA** | 8 COMM / 8-EFB ref1 | DI 3 | 40Hz | 60Hz | 60Hz | — | — |
| **48TM001125-DATA** | 8 COMM / 8-EFB ref1 | DI 3 | 40Hz | 60Hz | 60Hz | — | — |
| **48TM001134-DATA** | 8 COMM / 8-EFB ref1 | DI 3 | 40Hz | 60Hz | 60Hz | — | — |
| **48TM001131-DATA** | 8 COMM / 8-EFB ref1 | DI 3 | 40Hz | 60Hz | 60Hz | — | — |
| **48TM001126-DATA** | 8 COMM / 8-EFB ref1 | DI 3 | 40Hz | 60Hz | 60Hz | — | — |
| **48TM001129-DATA** | 8 COMM / 8-EFB ref1 | DI 3 | 40Hz | 60Hz | 60Hz | — | — |
| **48TM001132-DATA** | 8 COMM / 8-EFB ref1 | DI 3 | 40Hz | 60Hz | 60Hz | — | — |

LEGEND

— = HVAC Default, field does not require change.

## Table 30 — ACH550/580 VFD Parameters, for 48/50 Units with I/O Flex Controls (cont)

| LOOKUP VARIABLE | AO1 CONTENT SEL | MAX AMPS | STOP FCN | ACCEL | DECEL | FBA TYPE |
|---|---|---|---|---|---|---|
| **VFD PARAMETERS** | **1501 / 13.12** | **2003 /30.17** | **2102 /21.03** | **2202 /28.72** | **2203 /28.73** | **5101 / 51.01** |
| **48TM482815-DATA** | 102 Speed / 1-motor speed used | 6.7 | Ramp | 30s | 30s | — |
| **48TM482819-DATA** | 102 Speed / 1-motor speed used | 3.3 | Ramp | 30s | 30s | — |
| **48TM482821-DATA** | 102 Speed / 1-motor speed used | 3.6 | Ramp | 30s | 30s | — |
| **48TM482814-DATA** | 102 Speed / 1-motor speed used | 9.1 | Ramp | 30s | 30s | — |
| **48TM482825-DATA** | 102 Speed / 1-motor speed used | 4.1 | Ramp | 30s | 30s | — |
| **48TM482813-DATA** | 102 Speed / 1-motor speed used | 4.4 | Ramp | 30s | 30s | — |
| **48TM000640-DATA** | 102 Speed / 1-motor speed used | 10.6 | Ramp | 30s | 30s | — |
| **48TM000641-DATA** | 102 Speed / 1-motor speed used | 4.8 | Ramp | 30s | 30s | — |
| **48TM482817-DATA** | 102 Speed / 1-motor speed used | 13.5 | Ramp | 30s | 30s | — |
| **48TM482824-DATA** | 102 Speed / 1-motor speed used | 6.2 | Ramp | 30s | 30s | — |
| **48TM482822-DATA** | 102 Speed / 1-motor speed used | 5.6 | Ramp | 30s | 30s | — |
| **48TM482818-DATA** | 102 Speed / 1-motor speed used | 15.6 | Ramp | 30s | 30s | — |
| **48TM482820-DATA** | 102 Speed / 1-motor speed used | 7.4 | Ramp | 30s | 30s | — |
| **48TM482823-DATA** | 102 Speed / 1-motor speed used | 6.9 | Ramp | 30s | 30s | — |
| **50TM480969-DATA** | 102 Speed / 1-motor speed used | 10.6 | Ramp | 30s | 30s | — |
| **50TM480977-DATA** | 102 Speed / 1-motor speed used | 4.8 | Ramp | 30s | 30s | — |
| **50TM480972-DATA** | 102 Speed / 1-motor speed used | 13.5 | Ramp | 30s | 30s | — |
| **50TM480973-DATA** | 102 Speed / 1-motor speed used | 6.2 | Ramp | 30s | 30s | — |
| **50TM480968-DATA** | 102 Speed / 1-motor speed used | 5.6 | Ramp | 30s | 30s | — |
| **50TM480971-DATA** | 102 Speed / 1-motor speed used | 19.7 | Ramp | 30s | 30s | — |
| **50TM480978-DATA** | 102 Speed / 1-motor speed used | 9.9 | Ramp | 30s | 30s | — |
| **50TM480970-DATA** | 102 Speed / 1-motor speed used | 8.7 | Ramp | 30s | 30s | — |
| **50HE403471-DATA** | 102 Speed / 1-motor speed used | 10.6 | Ramp | 30s | 30s | — |
| **50HE403559-DATA** | 102 Speed / 1-motor speed used | 4.8 | Ramp | 30s | 30s | — |
| **50HE403537-DATA** | 102 Speed / 1-motor speed used | 13.5 | Ramp | 30s | 30s | — |
| **50HE403514-DATA** | 102 Speed / 1-motor speed used | 6.2 | Ramp | 30s | 30s | — |
| **50HE403561-DATA** | 102 Speed / 1-motor speed used | 5.6 | Ramp | 30s | 30s | — |
| **50HE403538-DATA** | 102 Speed / 1-motor speed used | 19.7 | Ramp | 30s | 30s | — |
| **50HE403468-DATA** | 102 Speed / 1-motor speed used | 9.9 | Ramp | 30s | 30s | — |
| **50HE403562-DATA** | 102 Speed / 1-motor speed used | 8.7 | Ramp | 30s | 30s | — |
| **50HE403557-DATA** | 102 Speed / 1-motor speed used | 27 | Ramp | 30s | 30s | — |
| **50HE403515-DATA** | 102 Speed / 1-motor speed used | 13.7 | Ramp | 30s | 30s | — |
| **50HE403563-DATA** | 102 Speed / 1-motor speed used | 10.4 | Ramp | 30s | 30s | — |
| **50HE403642-DATA** | 102 Speed / 1-motor speed used | 15.6 | Ramp | 30s | 30s | — |
| **50HE403643-DATA** | 102 Speed / 1-motor speed used | 7.4 | Ramp | 30s | 30s | — |
| **50HE403644-DATA** | 102 Speed / 1-motor speed used | 6.9 | Ramp | 30s | 30s | — |
| **50HE403558-DATA** | 102 Speed / 1-motor speed used | 35 | Ramp | 30s | 30s | — |
| **50HE403560-DATA** | 102 Speed / 1-motor speed used | 17.5 | Ramp | 30s | 30s | — |
| **50HE403564-DATA** | 102 Speed / 1-motor speed used | 12.7 | Ramp | 30s | 30s | — |
| **48TM001419-DATA** | 102 Speed / 1-motor speed used | 6.7 | Ramp | 30s | 30s | 64 ModBus Plus / 502-Modbus/TCP |
| **48TM001420-DATA** | 102 Speed / 1-motor speed used | 3.3 | Ramp | 30s | 30s | 64 ModBus Plus / 502-Modbus/TCP |
| **48TM001418-DATA** | 102 Speed / 1-motor speed used | 3.6 | Ramp | 30s | 30s | 64 ModBus Plus / 502-Modbus/TCP |
| **48TM001422-DATA** | 102 Speed / 1-motor speed used | 9.1 | Ramp | 30s | 30s | 64 ModBus Plus / 502-Modbus/TCP |
| **48TM001423-DATA** | 102 Speed / 1-motor speed used | 4.1 | Ramp | 30s | 30s | 64 ModBus Plus / 502-Modbus/TCP |
| **48TM001421-DATA** | 102 Speed / 1-motor speed used | 4.4 | Ramp | 30s | 30s | 64 ModBus Plus / 502-Modbus/TCP |
| **48TM001425-DATA** | 102 Speed / 1-motor speed used | 6.7 | Ramp | 30s | 30s | 64 ModBus Plus / 502-Modbus/TCP |
| **48TM001426-DATA** | 102 Speed / 1-motor speed used | 3.3 | Ramp | 30s | 30s | 64 ModBus Plus / 502-Modbus/TCP |
| **48TM001424-DATA** | 102 Speed / 1-motor speed used | 3.6 | Ramp | 30s | 30s | 64 ModBus Plus / 502-Modbus/TCP |
| **48TM001427-DATA** | 102 Speed / 1-motor speed used | 4.4 | Ramp | 30s | 30s | 64 ModBus Plus / 502-Modbus/TCP |
| **48TM001428-DATA** | 102 Speed / 1-motor speed used | 10.6 | Ramp | 30s | 30s | 64 ModBus Plus / 502-Modbus/TCP |
| **48TM001429-DATA** | 102 Speed / 1-motor speed used | 4.8 | Ramp | 30s | 30s | 64 ModBus Plus / 502-Modbus/TCP |
| **48TM001430-DATA** | 102 Speed / 1-motor speed used | 5.6 | Ramp | 30s | 30s | 64 ModBus Plus / 502-Modbus/TCP |
| **48TM001431-DATA** | 102 Speed / 1-motor speed used | 10.6 | Ramp | 30s | 30s | 64 ModBus Plus / 502-Modbus/TCP |
| **48TM001432-DATA** | 102 Speed / 1-motor speed used | 4.8 | Ramp | 30s | 30s | 64 ModBus Plus / 502-Modbus/TCP |
| **48TM001124-DATA** | 102 Speed / 1-motor speed used | 6.7 | Ramp | 30s | 30s | 64 ModBus Plus / 502-Modbus/TCP |
| **48TM001127-DATA** | 102 Speed / 1-motor speed used | 3.3 | Ramp | 30s | 30s | 64 ModBus Plus / 502-Modbus/TCP |
| **48TM001133-DATA** | 102 Speed / 1-motor speed used | 10.6 | Ramp | 30s | 30s | 64 ModBus Plus / 502-Modbus/TCP |
| **48TM001128-DATA** | 102 Speed / 1-motor speed used | 4.8 | Ramp | 30s | 30s | 64 ModBus Plus / 502-Modbus/TCP |
| **48TM001125-DATA** | 102 Speed / 1-motor speed used | 13.5 | Ramp | 30s | 30s | 64 ModBus Plus / 502-Modbus/TCP |
| **48TM001134-DATA** | 102 Speed / 1-motor speed used | 6.2 | Ramp | 30s | 30s | 64 ModBus Plus / 502-Modbus/TCP |
| **48TM001131-DATA** | 102 Speed / 1-motor speed used | 5.6 | Ramp | 30s | 30s | 64 ModBus Plus / 502-Modbus/TCP |
| **48TM001126-DATA** | 102 Speed / 1-motor speed used | 15.6 | Ramp | 30s | 30s | 64 ModBus Plus / 502-Modbus/TCP |
| **48TM001129-DATA** | 102 Speed / 1-motor speed used | 7.4 | Ramp | 30s | 30s | 64 ModBus Plus / 502-Modbus/TCP |
| **48TM001132-DATA** | 102 Speed / 1-motor speed used | 6.9 | Ramp | 30s | 30s | 64 ModBus Plus / 502-Modbus/TCP |

LEGEND

— = HVAC Default, field does not require change.

## Table 30 — ACH550/580 VFD Parameters, for 48/50 Units with I/O Flex Controls (cont)

| LOOKUP VARIABLE | STATION ID | BAUD RATE | PARITY | EFB STATION ID | EFB BAUD RATE | EFB PARITY | COMM PROT SEL | RUN ENABLE | CROSS REFERENCE | |
|---|---|---|---|---|---|---|---|---|---|---|
| VFD PARAMETERS | 5201 / 58.03 | 5202 / 58.04 | 5203 / 58.05 | 5302 / 58.03 | 5303 / 58.04 | 5304 / 58.05 | 9802 / 58.01 | 1601 / 20.40 | EM_PKG | CL_PKG |
| 48TM482815-DATA | — | — | — | — | — | — | — | — | 48TM482532 | — |
| 48TM482819-DATA | — | — | — | — | — | — | — | — | 48TM482533 | — |
| 48TM482821-DATA | — | — | — | — | — | — | — | — | 48TM482534 | — |
| 48TM482814-DATA | — | — | — | — | — | — | — | — | 48TM482535 | — |
| 48TM482825-DATA | — | — | — | — | — | — | — | — | 48TM482536 | — |
| 48TM482813-DATA | — | — | — | — | — | — | — | — | 48TM482537 | — |
| 48TM000640-DATA | — | — | — | — | — | — | — | — | 48TM482591 | — |
| 48TM000641-DATA | — | — | — | — | — | — | — | — | 48TM482536 | — |
| 48TM482817-DATA | — | — | — | — | — | — | — | — | 48TM482533 | — |
| 48TM482824-DATA | — | — | — | — | — | — | — | — | 48TM482592 | — |
| 48TM482822-DATA | — | — | — | — | — | — | — | — | 48TM482539 | — |
| 48TM482818-DATA | — | — | — | — | — | — | — | — | 48TM482534 | — |
| 48TM482820-DATA | — | — | — | — | — | — | — | — | 48TM482537 | — |
| 48TM482823-DATA | — | — | — | — | — | — | — | — | 48TM482540 | — |
| 50TM480969-DATA | — | — | — | — | — | — | — | — | 50TM480822 | — |
| 50TM480977-DATA | — | — | — | — | — | — | — | — | 50TM480842 | — |
| 50TM480972-DATA | — | — | — | — | — | — | — | — | 50TM480837 | — |
| 50TM480973-DATA | — | — | — | — | — | — | — | — | 50TM480838 | — |
| 50TM480968-DATA | — | — | — | — | — | — | — | — | 50TM480821 | — |
| 50TM480971-DATA | — | — | — | — | — | — | — | — | 50TM480824 | — |
| 50TM480978-DATA | — | — | — | — | — | — | — | — | 50TM480843 | — |
| 50TM480970-DATA | — | — | — | — | — | — | — | — | 50TM480823 | — |
| 50HE403471-DATA | — | — | — | — | — | — | — | — | 50HE403471 | — |
| 50HE403559-DATA | — | — | — | — | — | — | — | — | 50HE403559 | — |
| 50HE403537-DATA | — | — | — | — | — | — | — | — | 50HE403537 | — |
| 50HE403514-DATA | — | — | — | — | — | — | — | — | 50HE403514 | — |
| 50HE403561-DATA | — | — | — | — | — | — | — | — | 50HE403561 | — |
| 50HE403538-DATA | — | — | — | — | — | — | — | — | 50HE403538 | — |
| 50HE403468-DATA | — | — | — | — | — | — | — | — | 50HE403468 | — |
| 50HE403562-DATA | — | — | — | — | — | — | — | — | 50HE403562 | — |
| 50HE403557-DATA | — | — | — | — | — | — | — | — | 50HE403557 | — |
| 50HE403515-DATA | — | — | — | — | — | — | — | — | 50HE403515 | — |
| 50HE403563-DATA | — | — | — | — | — | — | — | — | 50HE403563 | — |
| 50HE403642-DATA | — | — | — | — | — | — | — | — | 50HE403538 | — |
| 50HE403643-DATA | — | — | — | — | — | — | — | — | 50HE403468 | — |
| 50HE403644-DATA | — | — | — | — | — | — | — | — | 50HE403562 | — |
| 50HE403558-DATA | — | — | — | — | — | — | — | — | 50HE403558 | — |
| 50HE403560-DATA | — | — | — | — | — | — | — | — | 50HE403560 | — |
| 50HE403564-DATA | — | — | — | — | — | — | — | — | 50HE403564 | — |
| 48TM001419-DATA | 1 | 9.6 kb/s | 8 NONE 1 | — | — | — | 1 Std Modbus / Modbus | — | N/A | — |
| 48TM001420-DATA | 1 | 9.6 kb/s | 8 NONE 1 | — | — | — | 1 Std Modbus / Modbus | — | N/A | — |
| 48TM001418-DATA | 1 | 9.6 kb/s | 8 NONE 1 | — | — | — | 1 Std Modbus / Modbus | — | N/A | — |
| 48TM001422-DATA | 1 | 9.6 kb/s | 8 NONE 1 | — | — | — | 1 Std Modbus / Modbus | — | N/A | — |
| 48TM001423-DATA | 1 | 9.6 kb/s | 8 NONE 1 | — | — | — | 1 Std Modbus / Modbus | — | N/A | — |
| 48TM001421-DATA | 1 | 9.6 kb/s | 8 NONE 1 | — | — | — | 1 Std Modbus / Modbus | — | N/A | — |
| 48TM001425-DATA | 1 | 9.6 kb/s | 8 NONE 1 | — | — | — | 1 Std Modbus / Modbus | — | N/A | — |
| 48TM001426-DATA | 1 | 9.6 kb/s | 8 NONE 1 | — | — | — | 1 Std Modbus / Modbus | — | N/A | — |
| 48TM001424-DATA | 1 | 9.6 kb/s | 8 NONE 1 | — | — | — | 1 Std Modbus / Modbus | — | N/A | — |
| 48TM001427-DATA | 1 | 9.6 kb/s | 8 NONE 1 | — | — | — | 1 Std Modbus / Modbus | — | N/A | — |
| 48TM001428-DATA | 1 | 9.6 kb/s | 8 NONE 1 | — | — | — | 1 Std Modbus / Modbus | — | N/A | — |
| 48TM001429-DATA | 1 | 9.6 kb/s | 8 NONE 1 | — | — | — | 1 Std Modbus / Modbus | — | N/A | — |
| 48TM001430-DATA | 1 | 9.6 kb/s | 8 NONE 1 | — | — | — | 1 Std Modbus / Modbus | — | N/A | — |
| 48TM001431-DATA | 1 | 9.6 kb/s | 8 NONE 1 | — | — | — | 1 Std Modbus / Modbus | — | N/A | — |
| 48TM001432-DATA | 1 | 9.6 kb/s | 8 NONE 1 | — | — | — | 1 Std Modbus / Modbus | — | N/A | — |
| 48TM001124-DATA | 1 | 9.6 kb/s | 8 NONE 1 | — | — | — | 1 Std Modbus / Modbus | — | N/A | — |
| 48TM001127-DATA | 1 | 9.6 kb/s | 8 NONE 1 | — | — | — | 1 Std Modbus / Modbus | — | N/A | — |
| 48TM001133-DATA | 1 | 9.6 kb/s | 8 NONE 1 | — | — | — | 1 Std Modbus / Modbus | — | N/A | — |
| 48TM001128-DATA | 1 | 9.6 kb/s | 8 NONE 1 | — | — | — | 1 Std Modbus / Modbus | — | N/A | — |
| 48TM001125-DATA | 1 | 9.6 kb/s | 8 NONE 1 | — | — | — | 1 Std Modbus / Modbus | — | N/A | — |
| 48TM001134-DATA | 1 | 9.6 kb/s | 8 NONE 1 | — | — | — | 1 Std Modbus / Modbus | — | N/A | — |
| 48TM001131-DATA | 1 | 9.6 kb/s | 8 NONE 1 | — | — | — | 1 Std Modbus / Modbus | — | N/A | — |
| 48TM001126-DATA | 1 | 9.6 kb/s | 8 NONE 1 | — | — | — | 1 Std Modbus / Modbus | — | N/A | — |
| 48TM001129-DATA | 1 | 9.6 kb/s | 8 NONE 1 | — | — | — | 1 Std Modbus / Modbus | — | N/A | — |
| 48TM001132-DATA | 1 | 9.6 kb/s | 8 NONE 1 | — | — | — | 1 Std Modbus / Modbus | — | — | — |

LEGEND

— = HVAC Default, field does not require change.

## Table 30 — ACH550/580 VFD Parameters, for 48/50 Units with I/O Flex Controls (cont)

| LOOKUP VARIABLE | PKG ABB ACH550 | MOTOR PART NUMBER | VFD PART NUMBER ACH550/ACH580 | DRIVE HP | DESC |
|---|---|---|---|---|---|
| **48TM001122-DATA** | 48TM001122 | HD56FE577 | HK30WA048 / HK30WB340 | 3 | SRT 2.4 HP 575V |
| **48TM001123-DATA** | 48TM001123 | HD56FE653 | HK30WA001 / HK30WB304 | 3 | SRT 2.4 HP 230V |
| **48TM001130-DATA** | 48TM001130 | HD56FR579 | HK30WA048 / HK30WB340 | 3 | SRT 1.7 HP 575V |
| **48TM001135-DATA** | 48TM001135 | HD56FE653 | HK30WA008 / HK30WB320 | 3 | SRT 2.4 HP 460V |
| **48TM001207-DATA** | 48TM001207 | HD56FR579 | HK30WA048 / HK30WB340 | 2 | SRT 1.7 HP 575V |
| **50TM000603-DATA** | 50TM000603 | HD58FE654 | HK30WA001 / HK30WB304 | 3 | STR 2.9 HP 230V |
| **50TM000611-DATA** | 50TM000611 | HD58FE654 | HK30WA008 / HK30WB320 | 3 | STR 2.9 HP 460V |
| **50TM000606-DATA** | 50TM000606 | HD60FE656 | HK30WA002 / HK30WB305 | 5 | STR 3.7 HP 230V |
| **50TM000607-DATA** | 50TM000607 | HD60FE656 | HK30WA009 / HK30WB321 | 5 | STR 3.7 HP 460V |
| **50TM000602-DATA** | 50TM000602 | HD58FE577 | HK30WA021 / HK30WB341 | 5 | STR 3.7 HP 575V |
| **50TM000605-DATA** | 50TM000605 | HD60FK659 | HK30WA003 / HK30WB306 | 7.5 | STR 5.0 HP 230V |
| **50TM000612-DATA** | 50TM000612 | HD60FK659 | HK30WA010 / HK30WB322 | 7.5 | STR 5.0 HP 460V |
| **50TM000604-DATA** | 50TM000604 | HD60FK577 | HK30WA335 / HK30WB342 | 7.5 | STR 5.0 HP 575V |
| **50TM000608-DATA** | 50TM000608 | HD56FE653 | HK30WA001 / HK30WB304 | 3 | STR 2.4 HP 230V |
| **50TM000609-DATA** | 50TM000609 | HD56FE653 | HK30WA008 / HK30WB320 | 3 | STR 2.4 HP 460V |
| **50TM000610-DATA** | 50TM000610 | HD56FE577 | HK30WA048 / HK30WB340 | 3 | STR 2.4 HP 575V |
| **48LC000506-DATA** | 48LC000506 | HD56FR579 | HK30WA333 / HK30WB340 | 7.5 | SRT 7.5 HP 575V |
| **48LC000510-DATA** | 48LC000510 | HD56FE577 | HK30WA333 / HK30WB340 | 7.5 | SRT 7.5 HP 575V |
| **48LC000513-DATA** | 48LC000513 | HD56FR579 | HK30WA333 / HK30WB340 | 7.5 | SRT 7.5 HP 575V |
| **48LC000516-DATA** | 48LC000516 | HD56FE577 | HK30WA333 / HK30WB340 | 7.5 | SRT 7.5 HP 575V |
| **48LC000520-DATA** | 48LC000520 | HD58FE577 | HK30WA334 / HK30WB341 | 10 | SRT 10 HP 575V |
| **48LC000523-DATA** | 48LC000523 | HD56FR579 | HK30WA333 / HK30WB340 | 10 | MRT 10 HP 575V |
| **48LC000526-DATA** | 48LC000526 | HD58FE577 | HK30WA334 / HK30WB341 | 10 | MRT 10 HP 575V |
| **48LC000529-DATA** | 48LC000529 | HD56FR579 | HK30WA333 / HK30WB340 | 3 | MRT 3 HP 575V |
| **48LC000534-DATA** | 48LC000534 | HD56FE577 | HK30WA360 / HK30WB369 | 3 | MRT 3 HP 575V |
| **48LC000538-DATA** | 48LC000538 | HD60FE576 | HK30WA361 / HK30WB370 | 5 | MRT 5 HP 575V |
| **48LC000541-DATA** | 48LC000541 | HD58FE577 | HK30WA334 / HK30WB341 | 5 | MRT 5 HP 575V |
| **48LC000544-DATA** | 48LC000544 | HD58FE577 | HK30WA334 / HK30WB341 | 5 | STR 5 HP 575V |
| **48LC000549-DATA** | 48LC000549 | HD58FE577 | HK30WA334 / HK30WB341 | 7.5 | MRT 7.5 HP 575V |
| **48LC000552-DATA** | 48LC000552 | HD60FE576 | HK30WA335 / HK30WB342 | 7.5 | MRT 7.5 HP 575V |
| **48LC000555-DATA** | 48LC000555 | HD60FL576 | HK30WA335 / HK30WB342 | 7.5 | MRT 7.5 HP 575V |
| **48LC000558-DATA** | 48LC000558 | HD62FL576 | HK30WA336 / HK30WB343 | 7.5 | MRT 7.5 HP 575V |
| **48LC000561-DATA** | 48LC000561 | HD64FL576 | HK30WA337 / HK30WB344 | 7.5 | MRT 7.5 HP 575V |
| **48LC000564-DATA** | 48LC000564 | HD60FL576 | HK30WA335 / HK30WB342 | 7.5 | MRT 7.5 HP 575V |
| **48LC000567-DATA** | 48LC000567 | HD62FL576 | HK30WA336 / HK30WB343 | 7.5 | MRT 7.5 HP 575V |
| **48LC000570-DATA** | 48LC000570 | HD58FE577 | HK30WA334 / HK30WB341 | 7.5 | MRT 7.5 HP 575V |
| **48LC000573-DATA** | 48LC000573 | HD60FL576 | HK30WA335 / HK30WB342 | 7.5 | MRT 7.5 HP 575V |
| **48LC000576-DATA** | 48LC000576 | HD62FL576 | HK30WA336 / HK30WB343 | 10 | MRT 10 HP 575V |
| **48LC000579-DATA** | 48LC000579 | HD64FL576 | HK30WA337 / HK30WB344 | 10 | MRT 10 HP 575V |
| **48LC000582-DATA** | 48LC000582 | HD58FE577 | HK30WA334 / HK30WB341 | 10 | MRT 10 HP 575V |
| **48LC000585-DATA** | 48LC000585 | HD64FL576 | HK30WA337 / HK30WB344 | 3 | MRT 3 HP 575V |
| **48LC000588-DATA** | 48LC000588 | HD60FL576 | HK30WA335 / HK30WB342 | 3 | MRT 3 HP 575V |
| **48LC000591-DATA** | 48LC000591 | HD62FL576 | HK30WA336 / HK30WB343 | 3 | MRT 3 HP 575V |
| **48LC000594-DATA** | 48LC000594 | HD64FL576 | HK30WA337 / HK30WB344 | 3 | MRT 3 HP 575V |
| **48LC000597-DATA** | 48LC000597 | HD60FL576 | HK30WA335 / HK30WB342 | 3 | MRT 3 HP 575V |
| **48LC000600-DATA** | 48LC000600 | HD62FL576 | HK30WA336 / HK30WB343 | 3 | MRT 3 HP 575V |
| **48LC000603-DATA** | 48LC000603 | HD58FE577 | HK30WA334 / HK30WB341 | 3 | MRT 3 HP 575V |
| **48LC000606-DATA** | 48LC000606 | HD60FE576 | HK30WA335 / HK30WB342 | 3 | MRT 3 HP 575V |
| **48LC000609-DATA** | 48LC000609 | HD60FL576 | HK30WA335 / HK30WB342 | 5 | MRT 5 HP 575V |
| **48LC000612-DATA** | 48LC000612 | HD62FL576 | HK30WA336 / HK30WB343 | 5 | MRT 5 HP 575V |
| **48LC000615-DATA** | 48LC000615 | HD58FE577 | HK30WA334 / HK30WB341 | 5 | MRT 5 HP 575V |
| **48LC000618-DATA** | 48LC000618 | HD60FL576 | HK30WA335 / HK30WB342 | 5 | MRT 5 HP 575V |
| **48LC000621-DATA** | 48LC000621 | HD62FL576 | HK30WA336 / HK30WB343 | 5 | MRT 5 HP 575V |
| **48LC000624-DATA** | 48LC000624 | HD64FL576 | HK30WA337 / HK30WB344 | 5 | MRT 5 HP 575V |
| **48LC000627-DATA** | 48LC000627 | HD58FE577 | HK30WA334 / HK30WB341 | 7.5 | MRT 7.5 HP 575V |
| **48LC000630-DATA** | 48LC000630 | HD60FL576 | HK30WA335 / HK30WB342 | 7.5 | MRT 7.5 HP 575V |
| **48LC000633-DATA** | 48LC000633 | HD62FL576 | HK30WA336 / HK30WB343 | 7.5 | MRT 7.5 HP 575V |
| **48LC000636-DATA** | 48LC000636 | HD64FL576 | HK30WA337 / HK30WB344 | 7.5 | MRT 7.5 HP 575V |
| **48LC000639-DATA** | 48LC000639 | HD60FL576 | HK30WA335 / HK30WB342 | 7.5 | SRT 7.5 HP 575V |
| **48LC000643-DATA** | 48LC000643 | HD60FL576 | HK30WA336 / HK30WB343 | 7.5 | STR 7.5 HP 575V |
| **48LC000646-DATA** | 48LC000646 | HD62FL576 | HK30WA337 / HK30WB344 | 10 | STR 10 HP 575V |
| **48LC000649-DATA** | 48LC000649 | HD60FL576 | HK30WA335 / HK30WB342 | 10 | SRT 10 HP 575V |
| **48LC000652-DATA** | 48LC000652 | HD62FL576 | HK30WA336 / HK30WB343 | 10 | STR 10 HP 575V |
| **48LC000655-DATA** | 48LC000655 | HD64FL576 | HK30WA337 / HK30WB344 | 2 | STR 2 HP 575V |

## Table 30 — ACH550/580 VFD Parameters, for 48/50 Units with I/O Flex Controls (cont)

| LOOKUP VARIABLE | VOLTAGE | N. AMPS | N. RPM | N. HP | EXT1 COMMANDS | EXT1/EXT2 SEL | ACH580 |
|---|---|---|---|---|---|---|---|
| VFD PARAMETERS | 9905 / 99.07 | 9906 / 99.06 | 9908 / 99.09 | 9909 / 99.10 | 1001 / 20.01 | 1102 / 19.11 | 20.03 |
| 48TM001122-DATA | 575 | 3.8 | 1725 | 2.4 | 10 COMM / 14-Emb. Fieldbus | 8 COMM / 32-EFB MCW bit 11 | 2-DI1 |
| 48TM001123-DATA | 230 | 7.9 | 1725 | 2.4 | 10 COMM /14- Emb. Fieldbus | 8 COMM / 32-EFB MCW bit 11 | 2-DI1 |
| 48TM001130-DATA | 575 | 3.1 | 1725 | 1.7 | 10 COMM / 14-Emb. Fieldbus | 8 COMM / 32-EFB MCW bit 11 | 2-DI1 |
| 48TM001135-DATA | 460 | 3.6 | 1725 | 2.4 | 10 COMM /14- Emb. Fieldbus | 8 COMM / 32-EFB MCW bit 11 | 2-DI1 |
| 48TM001207-DATA | 575 | 3.1 | 1725 | 1.7 | 10 COMM / 14-Emb. Fieldbus | 8 COMM / 32-EFB MCW bit 11 | 2-DI1 |
| 50TM000603-DATA | 230 | 9.2 | 1725 | 2.9 | 10 COMM /14- Emb. Fieldbus | 8 COMM / 32-EFB MCW bit 11 | 2-DI1 |
| 50TM000611-DATA | 460 | 4.2 | 1725 | 2.9 | 10 COMM / 14-Emb. Fieldbus | 8 COMM / 32-EFB MCW bit 11 | 2-DI1 |
| 50TM000606-DATA | 230 | 11.7 | 1725 | 3.7 | 10 COMM /14- Emb. Fieldbus | 8 COMM / 32-EFB MCW bit 11 | 2-DI1 |
| 50TM000607-DATA | 460 | 5.4 | 1725 | 3.7 | 10 COMM / 14-Emb. Fieldbus | 8 COMM / 32-EFB MCW bit 11 | 2-DI1 |
| 50TM000602-DATA | 575 | 4.9 | 1725 | 3.7 | 10 COMM /14- Emb. Fieldbus | 8 COMM / 32-EFB MCW bit 11 | 2-DI1 |
| 50TM000605-DATA | 230 | 17.1 | 1760 | 5 | 10 COMM / 14-Emb. Fieldbus | 8 COMM / 32-EFB MCW bit 11 | 2-DI1 |
| 50TM000612-DATA | 460 | 8.6 | 1760 | 5 | 10 COMM /14- Emb. Fieldbus | 8 COMM / 32-EFB MCW bit 11 | 2-DI1 |
| 50TM000604-DATA | 575 | 7.6 | 1745 | 5 | 10 COMM / 14-Emb. Fieldbus | 8 COMM / 32-EFB MCW bit 11 | 2-DI1 |
| 50TM000608-DATA | 230 | 7.9 | 1725 | 2.4 | 10 COMM /14- Emb. Fieldbus | 8 COMM / 32-EFB MCW bit 11 | 2-DI1 |
| 50TM000609-DATA | 460 | 3.6 | 1725 | 2.4 | 10 COMM / 14-Emb. Fieldbus | 8 COMM / 32-EFB MCW bit 11 | 2-DI1 |
| 50TM000610-DATA | 575 | 3.8 | 1725 | 2.4 | 10 COMM /14- Emb. Fieldbus | 8 COMM / 32-EFB MCW bit 11 | 2-DI1 |
| 48LC000506-DATA | 575 | 2.8 | 1725 | 1.7 | (1) DI1 / 1-In 1 Start | EXT1 | 2-DI1 |
| 48LC000510-DATA | 575 | 3.5 | 1725 | 2.4 | (1) DI1 / 1-In 1 Start | EXT1 | 2-DI1 |
| 48LC000513-DATA | 575 | 2.8 | 1725 | 1.7 | (1) DI1 / 1-In 1 Start | EXT1 | 2-DI1 |
| 48LC000516-DATA | 575 | 3.5 | 1725 | 2.4 | (1) DI1 / 1-In 1 Start | EXT1 | 2-DI1 |
| 48LC000520-DATA | 575 | 4.5 | 1725 | 3.7 | (1) DI1 / 1-In 1 Start | EXT1 | 2-DI1 |
| 48LC000523-DATA | 575 | 2.8 | 1690 | 1.7 | (1) DI1 / 1-In 1 Start | EXT1 | 2-DI1 |
| 48LC000526-DATA | 575 | 4.5 | 1710 | 3.7 | (1) DI1 / 1-In 1 Start | EXT1 | 2-DI1 |
| 48LC000529-DATA | 575 | 2.8 | 1690 | 1.7 | (1) DI1 / 1-In 1 Start | EXT1 | 2-DI1 |
| 48LC000534-DATA | 575 | 3.5 | 1680 | 2.4 | (1) DI1 / 1-In 1 Start | EXT1 | 2-DI1 |
| 48LC000538-DATA | 575 | 6.2 | 1745 | 4.7 | (1) DI1 / 1-In 1 Start | EXT1 | 2-DI1 |
| 48LC000541-DATA | 575 | 4.5 | 1710 | 3.7 | (1) DI1 / 1-In 1 Start | EXT1 | 2-DI1 |
| 48LC000544-DATA | 575 | 4.5 | 1710 | 3.7 | (1) DI1 / 1-In 1 Start | EXT1 | 2-DI1 |
| 48LC000549-DATA | 575 | 4.5 | 1710 | 3.7 | (1) DI1 / 1-In 1 Start | EXT1 | 2-DI1 |
| 48LC000552-DATA | 575 | 6.2 | 1745 | 5.25 | (1) DI1 / 1-In 1 Start | EXT1 | 2-DI1 |
| 48LC000555-DATA | 575 | 7.2 | 1745 | 5 | (1) DI1 / 1-In 1 Start | EXT1 | 2-DI1 |
| 48LC000558-DATA | 575 | 8.9 | 1750 | 7.5 | (1) DI1 / 1-In 1 Start | EXT1 | 2-DI1 |
| 48LC000561-DATA | 575 | 12.6 | 1755 | 10 | (1) DI1 / 1-In 1 Start | EXT1 | 2-DI1 |
| 48LC000564-DATA | 575 | 7.2 | 1745 | 5 | (1) DI1 / 1-In 1 Start | EXT1 | 2-DI1 |
| 48LC000567-DATA | 575 | 8.9 | 1750 | 7.5 | (1) DI1 / 1-In 1 Start | EXT1 | 2-DI1 |
| 48LC000570-DATA | 575 | 4.5 | 1710 | 3.7 | (1) DI1 / 1-In 1 Start | EXT1 | 2-DI1 |
| 48LC000573-DATA | 575 | 7.2 | 1745 | 5 | (1) DI1 / 1-In 1 Start | EXT1 | 2-DI1 |
| 48LC000576-DATA | 575 | 8.9 | 1750 | 7.5 | (1) DI1 / 1-In 1 Start | EXT1 | 2-DI1 |
| 48LC000579-DATA | 575 | 12.6 | 1755 | 10 | (1) DI1 / 1-In 1 Start | EXT1 | 2-DI1 |
| 48LC000582-DATA | 575 | 4.5 | 1710 | 3.7 | (1) DI1 / 1-In 1 Start | EXT1 | 2-DI1 |
| 48LC000585-DATA | 575 | 12.6 | 1755 | 10 | (1) DI1 / 1-In 1 Start | EXT1 | 2-DI1 |
| 48LC000588-DATA | 575 | 7.2 | 1745 | 5 | (1) DI1 / 1-In 1 Start | EXT1 | 2-DI1 |
| 48LC000591-DATA | 575 | 8.9 | 1750 | 7.5 | (1) DI1 / 1-In 1 Start | EXT1 | 2-DI1 |
| 48LC000594-DATA | 575 | 12.6 | 1755 | 10 | (1) DI1 / 1-In 1 Start | EXT1 | 2-DI1 |
| 48LC000597-DATA | 575 | 7.2 | 1745 | 5 | (1) DI1 / 1-In 1 Start | EXT1 | 2-DI1 |
| 48LC000600-DATA | 575 | 8.9 | 1750 | 7.5 | (1) DI1 / 1-In 1 Start | EXT1 | 2-DI1 |
| 48LC000603-DATA | 575 | 4.5 | 1710 | 3.7 | (1) DI1 / 1-In 1 Start | EXT1 | 2-DI1 |
| 48LC000606-DATA | 575 | 6.2 | 1745 | 5.25 | (1) DI1 / 1-In 1 Start | EXT1 | 2-DI1 |
| 48LC000609-DATA | 575 | 7.2 | 1745 | 5 | (1) DI1 / 1-In 1 Start | EXT1 | 2-DI1 |
| 48LC000612-DATA | 575 | 8.9 | 1750 | 7.5 | (1) DI1 / 1-In 1 Start | EXT1 | 2-DI1 |
| 48LC000615-DATA | 575 | 4.5 | 1710 | 3.7 | (1) DI1 / 1-In 1 Start | EXT1 | 2-DI1 |
| 48LC000618-DATA | 575 | 7.2 | 1745 | 5 | (1) DI1 / 1-In 1 Start | EXT1 | 2-DI1 |
| 48LC000621-DATA | 575 | 8.9 | 1750 | 7.5 | (1) DI1 / 1-In 1 Start | EXT1 | 2-DI1 |
| 48LC000624-DATA | 575 | 12.6 | 1755 | 10 | (1) DI1 / 1-In 1 Start | EXT1 | 2-DI1 |
| 48LC000627-DATA | 575 | 4.5 | 1710 | 3.7 | (1) DI1 / 1-In 1 Start | EXT1 | 2-DI1 |
| 48LC000630-DATA | 575 | 7.2 | 1745 | 5 | (1) DI1 / 1-In 1 Start | EXT1 | 2-DI1 |
| 48LC000633-DATA | 575 | 8.9 | 1750 | 7.5 | (1) DI1 / 1-In 1 Start | EXT1 | 2-DI1 |
| 48LC000636-DATA | 575 | 12.6 | 1755 | 10 | (1) DI1 / 1-In 1 Start | EXT1 | 2-DI1 |
| 48LC000639-DATA | 575 | 7.2 | 1745 | 5 | (1) DI1 / 1-In 1 Start | EXT1 | 2-DI1 |
| 48LC000643-DATA | 575 | 7.2 | 1745 | 5 | (1) DI1 / 1-In 1 Start | EXT1 | 2-DI1 |
| 48LC000646-DATA | 575 | 8.9 | 1750 | 7.5 | (1) DI1 / 1-In 1 Start | EXT1 | 2-DI1 |
| 48LC000649-DATA | 575 | 7.2 | 1745 | 5 | (1) DI1 / 1-In 1 Start | EXT1 | 2-DI1 |
| 48LC000652-DATA | 575 | 8.9 | 1750 | 7.5 | (1) DI1 / 1-In 1 Start | EXT1 | 2-DI1 |
| 48LC000655-DATA | 575 | 12.6 | 1755 | 10 | (1) DI1 / 1-In 1 Start | EXT1 | 2-DI1 |

## Table 30 — ACH550/580 VFD Parameters, for 48/50 Units with I/O Flex Controls (cont)

| LOOKUP VARIABLE | REF1 SELECT 550/580 | CONST SPEED SEL 550/580 | CONST SPEED 1 550/580 | CONST SPEED 2 550/580 | CONST SPEED 3 550/580 | CONST SPEED 4 550/580 | RELAY OUT 1 550/580 |
|---|---|---|---|---|---|---|---|
| **VFD PARAMETERS** | **1103 / 28.11** | **1201 / 28.22** | **1202 / 28.26** | **1203 / 28.27** | **1204 / 28.28** | **1205 / 28.29** | **1401 / 10.24** |
| **48TM001122-DATA** | 8 COMM / FB A ref1 | DI 3 | 40Hz | 60Hz | 60Hz | — | — |
| **48TM001123-DATA** | 8 COMM / FB A ref1 | DI 3 | 40Hz | 60Hz | 60Hz | — | — |
| **48TM001130-DATA** | 8 COMM / FB A ref1 | DI 3 | 40Hz | 60Hz | 60Hz | — | — |
| **48TM001135-DATA** | 8 COMM / FB A ref1 | DI 3 | 40Hz | 60Hz | 60Hz | — | — |
| **48TM001207-DATA** | 8 COMM / FB A ref1 | DI 3 | 40Hz | 60Hz | 60Hz | — | — |
| **50TM000603-DATA** | 8 COMM / FB A ref1 | DI 3 | 40Hz | 60Hz | 60Hz | — | — |
| **50TM000611-DATA** | 8 COMM / FB A ref1 | DI 3 | 40Hz | 60Hz | 60Hz | — | — |
| **50TM000606-DATA** | 8 COMM / FB A ref1 | DI 3 | 40Hz | 60Hz | 60Hz | — | — |
| **50TM000607-DATA** | 8 COMM / FB A ref1 | DI 3 | 40Hz | 60Hz | 60Hz | — | — |
| **50TM000602-DATA** | 8 COMM / FB A ref1 | DI 3 | 40Hz | 60Hz | 60Hz | — | — |
| **50TM000605-DATA** | 8 COMM / FB A ref1 | DI 3 | 40Hz | 60Hz | 60Hz | — | — |
| **50TM000612-DATA** | 8 COMM / FB A ref1 | DI 3 | 40Hz | 60Hz | 60Hz | — | — |
| **50TM000604-DATA** | 8 COMM / FB A ref1 | DI 3 | 40Hz | 60Hz | 60Hz | — | — |
| **50TM000608-DATA** | 8 COMM / FB A ref1 | DI 3 | 40Hz | 60Hz | 60Hz | — | — |
| **50TM000609-DATA** | 8 COMM / FB A ref1 | DI 3 | 40Hz | 60Hz | 60Hz | — | — |
| **50TM000610-DATA** | 8 COMM / FB A ref1 | DI 3 | 40Hz | 60Hz | 60Hz | — | — |
| **48LC000506-DATA** | AI-1 / AI1 scaled | NOT SEL / Always off | 52.4 | 60Hz | 60Hz | — | 16 FLT/Alarm |
| **48LC000510-DATA** | AI-1 / AI1 scaled | NOT SEL / Always off | 52.4 | 60Hz | 60Hz | — | 16 FLT/Alarm |
| **48LC000513-DATA** | AI-1 / AI1 scaled | NOT SEL / Always off | 42.6 | 60Hz | 60Hz | — | 16 FLT/Alarm |
| **48LC000516-DATA** | AI-1 / AI1 scaled | NOT SEL / Always off | 42.6 | 60Hz | 60Hz | — | 16 FLT/Alarm |
| **48LC000520-DATA** | AI-1 / AI1 scaled | NOT SEL / Always off | 41.2 | 60Hz | 60Hz | — | 16 FLT/Alarm |
| **48LC000523-DATA** | AI-1 / AI1 scaled | NOT SEL / Always off | 39.9Hz | 39.9Hz | 60Hz | 60Hz | 16 FLT/Alarm |
| **48LC000526-DATA** | AI-1 / AI1 scaled | NOT SEL / Always off | 39.9Hz | 39.9Hz | 60Hz | 60Hz | 16 FLT/Alarm |
| **48LC000529-DATA** | AI-1 / AI1 scaled | NOT SEL / Always off | 39.9Hz | 39.9Hz | 60Hz | 60Hz | 16 FLT/Alarm |
| **48LC000534-DATA** | AI-1 / AI1 scaled | NOT SEL / Always off | 39.9Hz | 39.9Hz | 60Hz | 60Hz | 16 FLT/Alarm |
| **48LC000538-DATA** | AI-1 / AI1 scaled | NOT SEL / Always off | 39.9Hz | 39.9Hz | 60Hz | 60Hz | 16 FLT/Alarm |
| **48LC000541-DATA** | AI-1 / AI1 scaled | NOT SEL / Always off | 39.9Hz | 39.9Hz | 60Hz | 60Hz | 16 FLT/Alarm |
| **48LC000544-DATA** | AI-1 / AI1 scaled | NOT SEL / Always off | 39.9Hz | 39.9Hz | 60Hz | 60Hz | 16 FLT/Alarm |
| **48LC000549-DATA** | AI-1 / AI1 scaled | NOT SEL / Always off | 32.1Hz | 47.7Hz | 60Hz | 60Hz | 16 FLT/Alarm |
| **48LC000552-DATA** | AI-1 / AI1 scaled | NOT SEL / Always off | 32.1Hz | 47.7Hz | 60Hz | 60Hz | 16 FLT/Alarm |
| **48LC000555-DATA** | AI-1 / AI1 scaled | NOT SEL / Always off | 31.5Hz | 37Hz | 60Hz | 60Hz | 16 FLT/Alarm |
| **48LC000558-DATA** | AI-1 / AI1 scaled | NOT SEL / Always off | 31.5Hz | 37Hz | 60Hz | 60Hz | 16 FLT/Alarm |
| **48LC000561-DATA** | AI-1 / AI1 scaled | NOT SEL / Always off | 31.4Hz | 38.7Hz | 60Hz | 60Hz | 16 FLT/Alarm |
| **48LC000564-DATA** | AI-1 / AI1 scaled | NOT SEL / Always off | 32.1Hz | 47.7Hz | 60Hz | 60Hz | 16 FLT/Alarm |
| **48LC000567-DATA** | AI-1 / AI1 scaled | NOT SEL / Always off | 32.1Hz | 47.7Hz | 60Hz | 60Hz | 16 FLT/Alarm |
| **48LC000570-DATA** | AI-1 / AI1 scaled | NOT SEL / Always off | 34Hz | 49.4Hz | 60Hz | 60Hz | 16 FLT/Alarm |
| **48LC000573-DATA** | AI-1 / AI1 scaled | NOT SEL / Always off | 34Hz | 49.4Hz | 60Hz | 60Hz | 16 FLT/Alarm |
| **48LC000576-DATA** | AI-1 / AI1 scaled | NOT SEL / Always off | 34Hz | 49.4Hz | 60Hz | 60Hz | 16 FLT/Alarm |
| **48LC000579-DATA** | AI-1 / AI1 scaled | NOT SEL / Always off | 34Hz | 49.4Hz | 60Hz | 60Hz | 16 FLT/Alarm |
| **48LC000582-DATA** | AI-1 / AI1 scaled | NOT SEL / Always off | 31.5Hz | 37Hz | 60Hz | 60Hz | 16 FLT/Alarm |
| **48LC000585-DATA** | AI-1 / AI1 scaled | NOT SEL / Always off | 31.5Hz | 37Hz | 60Hz | 60Hz | 16 FLT/Alarm |
| **48LC000588-DATA** | AI-1 / AI1 scaled | NOT SEL / Always off | 36Hz | 43.2Hz | 60Hz | 60Hz | 16 FLT/Alarm |
| **48LC000591-DATA** | AI-1 / AI1 scaled | NOT SEL / Always off | 36Hz | 43.2Hz | 60Hz | 60Hz | 16 FLT/Alarm |
| **48LC000594-DATA** | AI-1 / AI1 scaled | NOT SEL / Always off | 36Hz | 43.2Hz | 60Hz | 60Hz | 16 FLT/Alarm |
| **48LC000597-DATA** | AI-1 / AI1 scaled | NOT SEL / Always off | 31.4Hz | 38.7Hz | 60Hz | 60Hz | 16 FLT/Alarm |
| **48LC000600-DATA** | AI-1 / AI1 scaled | NOT SEL / Always off | 31.4Hz | 38.7Hz | 60Hz | 60Hz | 16 FLT/Alarm |
| **48LC000603-DATA** | AI-1 / AI1 scaled | NOT SEL / Always off | 32.1Hz | 47.7Hz | 60Hz | 60Hz | 16 FLT/Alarm |
| **48LC000606-DATA** | AI-1 / AI1 scaled | NOT SEL / Always off | 32.1Hz | 47.7Hz | 60Hz | 60Hz | 16 FLT/Alarm |
| **48LC000609-DATA** | AI-1 / AI1 scaled | NOT SEL / Always off | 32.1Hz | 47.7Hz | 60Hz | 60Hz | 16 FLT/Alarm |
| **48LC000612-DATA** | AI-1 / AI1 scaled | NOT SEL / Always off | 32.1Hz | 47.7Hz | 60Hz | 60Hz | 16 FLT/Alarm |
| **48LC000615-DATA** | AI-1 / AI1 scaled | NOT SEL / Always off | 34Hz | 49.4Hz | 60Hz | 60Hz | 16 FLT/Alarm |
| **48LC000618-DATA** | AI-1 / AI1 scaled | NOT SEL / Always off | 34Hz | 49.4Hz | 60Hz | 60Hz | 16 FLT/Alarm |
| **48LC000621-DATA** | AI-1 / AI1 scaled | NOT SEL / Always off | 34Hz | 49.4Hz | 60Hz | 60Hz | 16 FLT/Alarm |
| **48LC000624-DATA** | AI-1 / AI1 scaled | NOT SEL / Always off | 34Hz | 49.4Hz | 60Hz | 60Hz | 16 FLT/Alarm |
| **48LC000627-DATA** | AI-1 / AI1 scaled | NOT SEL / Always off | 31.5Hz | 37Hz | 60Hz | 60Hz | 16 FLT/Alarm |
| **48LC000630-DATA** | AI-1 / AI1 scaled | NOT SEL / Always off | 31.5Hz | 37Hz | 60Hz | 60Hz | 16 FLT/Alarm |
| **48LC000633-DATA** | AI-1 / AI1 scaled | NOT SEL / Always off | 31.5Hz | 37Hz | 60Hz | 60Hz | 16 FLT/Alarm |
| **48LC000636-DATA** | AI-1 / AI1 scaled | NOT SEL / Always off | 31.5Hz | 37Hz | 60Hz | 60Hz | 16 FLT/Alarm |
| **48LC000639-DATA** | AI-1 / AI1 scaled | NOT SEL / Always off | 31.4Hz | 38.7Hz | 60Hz | 60Hz | 16 FLT/Alarm |
| **48LC000643-DATA** | AI-1 / AI1 scaled | NOT SEL / Always off | 31.4Hz | 38.7Hz | 60Hz | 60Hz | 16 FLT/Alarm |
| **48LC000646-DATA** | AI-1 / AI1 scaled | NOT SEL / Always off | 31.4Hz | 38.7Hz | 60Hz | 60Hz | 16 FLT/Alarm |
| **48LC000649-DATA** | AI-1 / AI1 scaled | NOT SEL / Always off | 36Hz | 43.2Hz | 60Hz | 60Hz | 16 FLT/Alarm |
| **48LC000652-DATA** | AI-1 / AI1 scaled | NOT SEL / Always off | 36Hz | 43.2Hz | 60Hz | 60Hz | 16 FLT/Alarm |
| **48LC000655-DATA** | AI-1 / AI1 scaled | NOT SEL / Always off | 36Hz | 43.2Hz | 60Hz | 60Hz | 16 FLT/Alarm |

## Table 30 — ACH550/580 VFD Parameters, for 48/50 Units with I/O Flex Controls (cont)

| LOOKUP VARIABLE | RELAY OUT 3 | AO1 CONTENT SEL | MAX AMPS | STOP FCN | ACCEL | DECEL | FBA TYPE |
|---|---|---|---|---|---|---|---|
| **VFD PARAMETERS** | **1403 /10.30** | **1501 / 13.12** | **2003 / 30.17** | **2102 / 21.03** | **2202 / 28.72** | **2203 / 28.73** | **5101 / 50.01** |
| **48TM001122-DATA** | 4 FAULT / (14) FAULT | 102 Speed / Motor spd used | 4.4 | Ramp | 30s | 30s | 64 ModBus Plus / 502-Modbus/TCP |
| **48TM001123-DATA** | 4 FAULT / (14) FAULT | 102 Speed / Motor spd used | 9.1 | Ramp | 30s | 30s | 64 ModBus Plus / 502-Modbus/TCP |
| **48TM001130-DATA** | 4 FAULT / (14) FAULT | 102 Speed / Motor spd used | 3.6 | Ramp | 30s | 30s | 64 ModBus Plus / 502-Modbus/TCP |
| **48TM001135-DATA** | 4 FAULT / (14) FAULT | 102 Speed / Motor spd used | 4.1 | Ramp | 30s | 30s | 64 ModBus Plus / 502-Modbus/TCP |
| **48TM001207-DATA** | 4 FAULT / (14) FAULT | 102 Speed / Motor spd used | 3.6 | Ramp | 30s | 30s | 64 ModBus Plus / 502-Modbus/TCP |
| **50TM000603-DATA** | 4 FAULT / (14) FAULT | 102 Speed / Motor spd used | 10.6 | Ramp | 30s | 30s | 64 ModBus Plus / 502-Modbus/TCP |
| **50TM000611-DATA** | 4 FAULT / (14) FAULT | 102 Speed / Motor spd used | 4.8 | Ramp | 30s | 30s | 64 ModBus Plus / 502-Modbus/TCP |
| **50TM000606-DATA** | 4 FAULT / (14) FAULT | 102 Speed / Motor spd used | 13.5 | Ramp | 30s | 30s | 64 ModBus Plus / 502-Modbus/TCP |
| **50TM000607-DATA** | 4 FAULT / (14) FAULT | 102 Speed / Motor spd used | 6.2 | Ramp | 30s | 30s | 64 ModBus Plus / 502-Modbus/TCP |
| **50TM000602-DATA** | 4 FAULT / (14) FAULT | 102 Speed / Motor spd used | 5.6 | Ramp | 30s | 30s | 64 ModBus Plus / 502-Modbus/TCP |
| **50TM000605-DATA** | 4 FAULT / (14) FAULT | 102 Speed / Motor spd used | 19.7 | Ramp | 30s | 30s | 64 ModBus Plus / 502-Modbus/TCP |
| **50TM000612-DATA** | 4 FAULT / (14) FAULT | 102 Speed / Motor spd used | 9.9 | Ramp | 30s | 30s | 64 ModBus Plus / 502-Modbus/TCP |
| **50TM000604-DATA** | 4 FAULT / (14) FAULT | 102 Speed / Motor spd used | 8.7 | Ramp | 30s | 30s | 64 ModBus Plus / 502-Modbus/TCP |
| **50TM000608-DATA** | 4 FAULT / (14) FAULT | 102 Speed / Motor spd used | 9.1 | Ramp | 30s | 30s | 64 ModBus Plus / 502-Modbus/TCP |
| **50TM000609-DATA** | 4 FAULT / (14) FAULT | 102 Speed / Motor spd used | 4.1 | Ramp | 30s | 30s | 64 ModBus Plus / 502-Modbus/TCP |
| **50TM000610-DATA** | 4 FAULT / (14) FAULT | 102 Speed / Motor spd used | 4.4 | Ramp | 30s | 30s | 64 ModBus Plus / 502-Modbus/TCP |
| **48LC000506-DATA** | 16 FLT/ALARM / (14) FAULT | 0103 OUTPUT FREQ | 3.2 | (1) Coast | 30s | 10s | — |
| **48LC000510-DATA** | 16 FLT/ALARM / (14) FAULT | 0103 OUTPUT FREQ | 4 | (1) Coast | 30s | 10s | — |
| **48LC000513-DATA** | 16 FLT/ALARM / (14) FAULT | 0103 OUTPUT FREQ | 3.2 | (1) Coast | 30s | 10s | — |
| **48LC000516-DATA** | 16 FLT/ALARM / (14) FAULT | 0103 OUTPUT FREQ | 4 | (1) Coast | 30s | 10s | — |
| **48LC000520-DATA** | 16 FLT/ALARM / (14) FAULT | 0103 OUTPUT FREQ | 5.2 | (1) Coast | 30s | 10s | — |
| **48LC000523-DATA** | 16 FLT/ALARM / (14) FAULT | 0103 OUTPUT FREQ | 3.2 | Ramp | 10s | 10s | — |
| **48LC000526-DATA** | 16 FLT/ALARM / (14) FAULT | 0103 OUTPUT FREQ | 5.2 | Ramp | 10s | 10s | — |
| **48LC000529-DATA** | 16 FLT/ALARM / (14) FAULT | 0103 OUTPUT FREQ | 3.2 | Ramp | 10s | 10s | — |
| **48LC000534-DATA** | 16 FLT/ALARM / (14) FAULT | 0103 OUTPUT FREQ | 4 | Ramp | 10s | 10s | — |
| **48LC000538-DATA** | 16 FLT/ALARM / (14) FAULT | 0103 OUTPUT FREQ | 7.1 | Ramp | 10s | 10s | — |
| **48LC000541-DATA** | 16 FLT/ALARM / (14) FAULT | 0103 OUTPUT FREQ | 5.2 | Ramp | 10s | 10s | — |
| **48LC000544-DATA** | 16 FLT/ALARM / (14) FAULT | 0103 OUTPUT FREQ | 5.2 | Ramp | 10s | 10s | — |
| **48LC000549-DATA** | 16 FLT/ALARM / (14) FAULT | 0103 OUTPUT FREQ | 5.2 | Ramp | 10s | 10s | — |
| **48LC000552-DATA** | 16 FLT/ALARM / (14) FAULT | 0103 OUTPUT FREQ | 7.1 | Ramp | 10s | 10s | — |
| **48LC000555-DATA** | 16 FLT/ALARM / (14) FAULT | 0103 OUTPUT FREQ | 8.3 | Ramp | 10s | 10s | — |
| **48LC000558-DATA** | 16 FLT/ALARM / (14) FAULT | 0103 OUTPUT FREQ | 10.2 | Ramp | 10s | 10s | — |
| **48LC000561-DATA** | 16 FLT/ALARM / (14) FAULT | 0103 OUTPUT FREQ | 14.5 | Ramp | 10s | 10s | — |
| **48LC000564-DATA** | 16 FLT/ALARM / (14) FAULT | 0103 OUTPUT FREQ | 8.3 | Ramp | 10s | 10s | — |
| **48LC000567-DATA** | 16 FLT/ALARM / (14) FAULT | 0103 OUTPUT FREQ | 10.2 | Ramp | 10s | 10s | — |
| **48LC000570-DATA** | 16 FLT/ALARM / (14) FAULT | 0103 OUTPUT FREQ | 5.2 | Ramp | 10s | 10s | — |
| **48LC000573-DATA** | 16 FLT/ALARM / (14) FAULT | 0103 OUTPUT FREQ | 8.3 | Ramp | 10s | 10s | — |
| **48LC000576-DATA** | 16 FLT/ALARM / (14) FAULT | 0103 OUTPUT FREQ | 10.2 | Ramp | 10s | 10s | — |
| **48LC000579-DATA** | 16 FLT/ALARM / (14) FAULT | 0103 OUTPUT FREQ | 14.5 | Ramp | 10s | 10s | — |
| **48LC000582-DATA** | 16 FLT/ALARM / (14) FAULT | 0103 OUTPUT FREQ | 5.2 | Ramp | 10s | 10s | — |
| **48LC000585-DATA** | 16 FLT/ALARM / (14) FAULT | 0103 OUTPUT FREQ | 14.5 | Ramp | 10s | 10s | — |
| **48LC000588-DATA** | 16 FLT/ALARM / (14) FAULT | 0103 OUTPUT FREQ | 8.3 | Ramp | 10s | 10s | — |
| **48LC000591-DATA** | 16 FLT/ALARM / (14) FAULT | 0103 OUTPUT FREQ | 10.2 | Ramp | 10s | 10s | — |
| **48LC000594-DATA** | 16 FLT/ALARM / (14) FAULT | 0103 OUTPUT FREQ | 14.5 | Ramp | 10s | 10s | — |
| **48LC000597-DATA** | 16 FLT/ALARM / (14) FAULT | 0103 OUTPUT FREQ | 8.3 | Ramp | 10s | 10s | — |
| **48LC000600-DATA** | 16 FLT/ALARM / (14) FAULT | 0103 OUTPUT FREQ | 10.2 | Ramp | 10s | 10s | — |
| **48LC000603-DATA** | 16 FLT/ALARM / (14) FAULT | 0103 OUTPUT FREQ | 5.2 | Ramp | 10s | 10s | — |
| **48LC000606-DATA** | 16 FLT/ALARM / (14) FAULT | 0103 OUTPUT FREQ | 7.1 | Ramp | 10s | 10s | — |
| **48LC000609-DATA** | 16 FLT/ALARM / (14) FAULT | 0103 OUTPUT FREQ | 8.3 | Ramp | 10s | 10s | — |
| **48LC000612-DATA** | 16 FLT/ALARM / (14) FAULT | 0103 OUTPUT FREQ | 10.2 | Ramp | 10s | 10s | — |
| **48LC000615-DATA** | 16 FLT/ALARM / (14) FAULT | 0103 OUTPUT FREQ | 5.2 | Ramp | 10s | 10s | — |
| **48LC000618-DATA** | 16 FLT/ALARM / (14) FAULT | 0103 OUTPUT FREQ | 8.3 | Ramp | 10s | 10s | — |
| **48LC000621-DATA** | 16 FLT/ALARM / (14) FAULT | 0103 OUTPUT FREQ | 10.2 | Ramp | 10s | 10s | — |
| **48LC000624-DATA** | 16 FLT/ALARM / (14) FAULT | 0103 OUTPUT FREQ | 14.5 | Ramp | 10s | 10s | — |
| **48LC000627-DATA** | 16 FLT/ALARM / (14) FAULT | 0103 OUTPUT FREQ | 5.2 | Ramp | 10s | 10s | — |
| **48LC000630-DATA** | 16 FLT/ALARM / (14) FAULT | 0103 OUTPUT FREQ | 8.3 | Ramp | 10s | 10s | — |
| **48LC000633-DATA** | 16 FLT/ALARM / (14) FAULT | 0103 OUTPUT FREQ | 10.2 | Ramp | 10s | 10s | — |
| **48LC000636-DATA** | 16 FLT/ALARM / (14) FAULT | 0103 OUTPUT FREQ | 14.5 | Ramp | 10s | 10s | — |
| **48LC000639-DATA** | 16 FLT/ALARM / (14) FAULT | 0103 OUTPUT FREQ | 8.3 | Ramp | 10s | 10s | — |
| **48LC000643-DATA** | 16 FLT/ALARM / (14) FAULT | 0103 OUTPUT FREQ | 8.3 | Ramp | 10s | 10s | — |
| **48LC000646-DATA** | 16 FLT/ALARM / (14) FAULT | 0103 OUTPUT FREQ | 10.2 | Ramp | 10s | 10s | — |
| **48LC000649-DATA** | 16 FLT/ALARM / (14) FAULT | 0103 OUTPUT FREQ | 8.3 | Ramp | 10s | 10s | — |
| **48LC000652-DATA** | 16 FLT/ALARM / (14) FAULT | 0103 OUTPUT FREQ | 10.2 | Ramp | 10s | 10s | — |
| **48LC000655-DATA** | 16 FLT/ALARM / (14) FAULT | 0103 OUTPUT FREQ | 14.5 | Ramp | 10s | 10s | — |

LEGEND

— = HVAC Default, field does not require change.

## Table 30 — ACH550/580 VFD Parameters, for 48/50 Units with I/O Flex Controls (cont)

| LOOKUP VARIABLE | STATION ID | BAUD RATE | PARITY | EFB STATION ID | EFB BAUD RATE | EFB PARITY | COMM PROT SEL | RUN ENABLE | CROSS REFERENCE | |
|---|---|---|---|---|---|---|---|---|---|---|
| VFD PARAMETERS | 5201 / 58.03 | 5202 / 58.04 | 5203 / 58.05 | 5302 / 58.03 | 5303 / 58.04 | 5304 / 58.05 | 9802 / 58.01 | 1601 / 20.40 | EM_PKG | CL_PKG |
| 48TM001122-DATA | 1 | 9.6 kb/s | 8 NONE 1 | — | — | — | 64 ModBus Plus / 502-Modbus/TCP | — | N/A | — |
| 48TM001123-DATA | 1 | 9.6 kb/s | 8 NONE 1 | — | — | — | 64 ModBus Plus / 502-Modbus/TCP | — | N/A | — |
| 48TM001130-DATA | 1 | 9.6 kb/s | 8 NONE 1 | — | — | — | 64 ModBus Plus / 502-Modbus/TCP | — | N/A | — |
| 48TM001135-DATA | 1 | 9.6 kb/s | 8 NONE 1 | — | — | — | 64 ModBus Plus / 502-Modbus/TCP | — | N/A | — |
| 48TM001207-DATA | 1 | 9.6 kb/s | 8 NONE 1 | — | — | — | 64 ModBus Plus / 502-Modbus/TCP | — | N/A | — |
| 50TM000603-DATA | 1 | 9.6 kb/s | 8 NONE 1 | — | — | — | 64 ModBus Plus / 502-Modbus/TCP | — | N/A | — |
| 50TM000611-DATA | 1 | 9.6 kb/s | 8 NONE 1 | — | — | — | 64 ModBus Plus / 502-Modbus/TCP | — | N/A | — |
| 50TM000606-DATA | 1 | 9.6 kb/s | 8 NONE 1 | — | — | — | 64 ModBus Plus / 502-Modbus/TCP | — | N/A | — |
| 50TM000607-DATA | 1 | 9.6 kb/s | 8 NONE 1 | — | — | — | 64 ModBus Plus / 502-Modbus/TCP | — | N/A | — |
| 50TM000602-DATA | 1 | 9.6 kb/s | 8 NONE 1 | — | — | — | 64 ModBus Plus / 502-Modbus/TCP | — | N/A | — |
| 50TM000605-DATA | 1 | 9.6 kb/s | 8 NONE 1 | — | — | — | 64 ModBus Plus / 502-Modbus/TCP | — | N/A | — |
| 50TM000612-DATA | 1 | 9.6 kb/s | 8 NONE 1 | — | — | — | 64 ModBus Plus / 502-Modbus/TCP | — | N/A | — |
| 50TM000604-DATA | 1 | 9.6 kb/s | 8 NONE 1 | — | — | — | 64 ModBus Plus / 502-Modbus/TCP | — | N/A | — |
| 50TM000608-DATA | 1 | 9.6 kb/s | 8 NONE 1 | — | — | — | 64 ModBus Plus / 502-Modbus/TCP | — | N/A | — |
| 50TM000609-DATA | 1 | 9.6 kb/s | 8 NONE 1 | — | — | — | 64 ModBus Plus / 502-Modbus/TCP | — | N/A | — |
| 50TM000610-DATA | 1 | 9.6 kb/s | 8 NONE 1 | — | — | — | 64 ModBus Plus / 502-Modbus/TCP | — | N/A | — |
| 48LC000506-DATA | — | — | — | 1 | 76.8kb/s | 8 NONE 1 | BACnet / BACnet MSTP | DI-1 | N/A | N/A |
| 48LC000510-DATA | — | — | — | 1 | 76.8kb/s | 8 NONE 1 | BACnet / BACnet MSTP | DI-1 | N/A | N/A |
| 48LC000513-DATA | — | — | — | 1 | 76.8kb/s | 8 NONE 1 | BACnet / BACnet MSTP | DI-1 | N/A | N/A |
| 48LC000516-DATA | — | — | — | 1 | 76.8kb/s | 8 NONE 1 | BACnet / BACnet MSTP | DI-1 | N/A | N/A |
| 48LC000520-DATA | — | — | — | 1 | 76.8kb/s | 8 NONE 1 | BACnet / BACnet MSTP | DI-1 | N/A | N/A |
| 48LC000523-DATA | — | — | — | 1 | 76.8kb/s | 8 NONE 1 | BACnet / BACnet MSTP | DI-1 | N/A | N/A |
| 48LC000526-DATA | — | — | — | 1 | 76.8kb/s | 8 NONE 1 | BACnet / BACnet MSTP | DI-1 | N/A | N/A |
| 48LC000529-DATA | — | — | — | 1 | 76.8kb/s | 8 NONE 1 | BACnet / BACnet MSTP | DI-1 | N/A | N/A |
| 48LC000534-DATA | — | — | — | 1 | 76.8kb/s | 8 NONE 1 | BACnet / BACnet MSTP | DI-1 | N/A | N/A |
| 48LC000538-DATA | — | — | — | 1 | 76.8kb/s | 8 NONE 1 | BACnet / BACnet MSTP | DI-1 | N/A | N/A |
| 48LC000541-DATA | — | — | — | 1 | 76.8kb/s | 8 NONE 1 | BACnet / BACnet MSTP | DI-1 | N/A | N/A |
| 48LC000544-DATA | — | — | — | 1 | 76.8kb/s | 8 NONE 1 | BACnet / BACnet MSTP | DI-1 | N/A | N/A |
| 48LC000549-DATA | — | — | — | 1 | 76.8kb/s | 8 NONE 1 | BACnet / BACnet MSTP | DI-1 | N/A | N/A |
| 48LC000552-DATA | — | — | — | 1 | 76.8kb/s | 8 NONE 1 | BACnet / BACnet MSTP | DI-1 | N/A | N/A |
| 48LC000555-DATA | — | — | — | 1 | 76.8kb/s | 8 NONE 1 | BACnet / BACnet MSTP | DI-1 | N/A | N/A |
| 48LC000558-DATA | — | — | — | 1 | 76.8kb/s | 8 NONE 1 | BACnet / BACnet MSTP | DI-1 | N/A | N/A |
| 48LC000561-DATA | — | — | — | 1 | 76.8kb/s | 8 NONE 1 | BACnet / BACnet MSTP | DI-1 | N/A | N/A |
| 48LC000564-DATA | — | — | — | 1 | 76.8kb/s | 8 NONE 1 | BACnet / BACnet MSTP | DI-1 | N/A | N/A |
| 48LC000567-DATA | — | — | — | 1 | 76.8kb/s | 8 NONE 1 | BACnet / BACnet MSTP | DI-1 | N/A | N/A |
| 48LC000570-DATA | — | — | — | 1 | 76.8kb/s | 8 NONE 1 | BACnet / BACnet MSTP | DI-1 | N/A | N/A |
| 48LC000573-DATA | — | — | — | 1 | 76.8kb/s | 8 NONE 1 | BACnet / BACnet MSTP | DI-1 | N/A | N/A |
| 48LC000576-DATA | — | — | — | 1 | 76.8kb/s | 8 NONE 1 | BACnet / BACnet MSTP | DI-1 | N/A | N/A |
| 48LC000579-DATA | — | — | — | 1 | 76.8kb/s | 8 NONE 1 | BACnet / BACnet MSTP | DI-1 | N/A | N/A |
| 48LC000582-DATA | — | — | — | 1 | 76.8kb/s | 8 NONE 1 | BACnet / BACnet MSTP | DI-1 | N/A | N/A |
| 48LC000585-DATA | — | — | — | 1 | 76.8kb/s | 8 NONE 1 | BACnet / BACnet MSTP | DI-1 | N/A | N/A |
| 48LC000588-DATA | — | — | — | 1 | 76.8kb/s | 8 NONE 1 | BACnet / BACnet MSTP | DI-1 | N/A | N/A |
| 48LC000591-DATA | — | — | — | 1 | 76.8kb/s | 8 NONE 1 | BACnet / BACnet MSTP | DI-1 | N/A | N/A |
| 48LC000594-DATA | — | — | — | 1 | 76.8kb/s | 8 NONE 1 | BACnet / BACnet MSTP | DI-1 | N/A | N/A |
| 48LC000597-DATA | — | — | — | 1 | 76.8kb/s | 8 NONE 1 | BACnet / BACnet MSTP | DI-1 | N/A | N/A |
| 48LC000600-DATA | — | — | — | 1 | 76.8kb/s | 8 NONE 1 | BACnet / BACnet MSTP | DI-1 | N/A | N/A |
| 48LC000603-DATA | — | — | — | 1 | 76.8kb/s | 8 NONE 1 | BACnet / BACnet MSTP | DI-1 | N/A | N/A |
| 48LC000606-DATA | — | — | — | 1 | 76.8kb/s | 8 NONE 1 | BACnet / BACnet MSTP | DI-1 | N/A | N/A |
| 48LC000609-DATA | — | — | — | 1 | 76.8kb/s | 8 NONE 1 | BACnet / BACnet MSTP | DI-1 | N/A | N/A |
| 48LC000612-DATA | — | — | — | 1 | 76.8kb/s | 8 NONE 1 | BACnet / BACnet MSTP | DI-1 | N/A | N/A |
| 48LC000615-DATA | — | — | — | 1 | 76.8kb/s | 8 NONE 1 | BACnet / BACnet MSTP | DI-1 | N/A | N/A |
| 48LC000618-DATA | — | — | — | 1 | 76.8kb/s | 8 NONE 1 | BACnet / BACnet MSTP | DI-1 | N/A | N/A |
| 48LC000621-DATA | — | — | — | 1 | 76.8kb/s | 8 NONE 1 | BACnet / BACnet MSTP | DI-1 | N/A | N/A |
| 48LC000624-DATA | — | — | — | 1 | 76.8kb/s | 8 NONE 1 | BACnet / BACnet MSTP | DI-1 | N/A | N/A |
| 48LC000627-DATA | — | — | — | 1 | 76.8kb/s | 8 NONE 1 | BACnet / BACnet MSTP | DI-1 | N/A | N/A |
| 48LC000630-DATA | — | — | — | 1 | 76.8kb/s | 8 NONE 1 | BACnet / BACnet MSTP | DI-1 | N/A | N/A |
| 48LC000633-DATA | — | — | — | 1 | 76.8kb/s | 8 NONE 1 | BACnet / BACnet MSTP | DI-1 | N/A | N/A |
| 48LC000636-DATA | — | — | — | 1 | 76.8kb/s | 8 NONE 1 | BACnet / BACnet MSTP | DI-1 | N/A | N/A |
| 48LC000639-DATA | — | — | — | 1 | 76.8kb/s | 8 NONE 1 | BACnet / BACnet MSTP | DI-1 | N/A | N/A |
| 48LC000643-DATA | — | — | — | 1 | 76.8kb/s | 8 NONE 1 | BACnet / BACnet MSTP | DI-1 | N/A | N/A |
| 48LC000646-DATA | — | — | — | 1 | 76.8kb/s | 8 NONE 1 | BACnet / BACnet MSTP | DI-1 | N/A | N/A |
| 48LC000649-DATA | — | — | — | 1 | 76.8kb/s | 8 NONE 1 | BACnet / BACnet MSTP | DI-1 | N/A | N/A |
| 48LC000652-DATA | — | — | — | 1 | 76.8kb/s | 8 NONE 1 | BACnet / BACnet MSTP | DI-1 | N/A | N/A |
| 48LC000655-DATA | — | — | — | 1 | 76.8kb/s | 8 NONE 1 | BACnet / BACnet MSTP | DI-1 | N/A | N/A |

LEGEND

— = HVAC Default, field does not require change.

## Table 31 — ACH550/580 VFD Common Parameters for 40RU Units with I/O Flex Controls

| PARAMETERS ACH550 \| 580 | DESCRIPTION | SETTING ACH550 / 580 |
|---|---|---|
| **9802 / 58.01** | **COMM PROT SEL** | **Std Modbus / Modbus RTU** |
| **9905 / 99.07** | Voltage | 575 |
| **9907 / 99.08** | Motor Nominal Frequency | 60Hz |
| **9908 / 99.09** | N. RPM | 1725 |
| **1001 / 20.01** | EXT1 Commands | 10 COMM / Emb. Fieldbus |
| **1102 / 19.11** | EXT1/EXT2 Sel | 8 COMM / 32-EFB MCW bit 11 |
| **1103 / 28.11** | REF 1 Select | 8 COMM / 8-EFB ref1 |
| **1201 / 28.22** | Const Speed Sel | DI 3 |
| **1202 / 28.26** | Const Speed 1 | 40Hz |
| **1203 / 28.27** | Const Speed 2 | 60Hz |
| **1204 / 28.28** | Const Speed 3 | 60Hz |
| **1205 / 28.29** | Const Speed 4 | — |
| **1401 / 10.24** | Relay Output 1 | — |
| **1403 / 10.30** | Relay Output 3 | 4 Fault / FLT/(14) Fault |
| **1501 / 13.12** | AO1 Content Sel | 102 Speed / 1-Motor speed used |
| **1601 / 20.40** | RUN ENABLE | — |
| **2007 / 30.13** | Minimum Frequency | 0Hz |
| **2008 / 30.14** | Maximum Frequency | 60Hz |
| **2101 / 21.19** | Start FCN | Auto / Automatic |
| **2102 / 21.03** | Stop FCN | Ramp |
| **2201 / 28.71** | ACCEL/DECEL | Not Sel |
| **2202 / 28.72** | ACCEL | 30s |
| **2203 / 28.73** | DECEL | 30s |
| **2606 / 97.01** | Switching Freq | 4kHz |
| **5101 / 51.01** | FBA Type | 64 ModBus Plus / Modbus/TCP |
| **5201 / 58.03** | Station ID | 1 |
| **5202 / 58.04** | Baud Rate | 9.6 kb/s |
| **5203 / 58.05** | Parity | 8 NONE 1 |
| **5301 / 58.25** | EFB Protocol ID | — |
| **5302 / 58.03** | EFB Station ID | — |
| **5303 / 58.04** | EFB Baud Rate | — |
| **5304 / 58.05** | EFB Parity | — |
| **5305 / 58.25** | EFB CTRL Profile | — |

## Table 32 — ACH550/580 VFD Parameters, for 40RU Units with I/O Flex Controls

| VFD PARAMETERS (ACH550 / ACH580) | PKG ABB ACH550 | MOTOR PART NUMBER | VFD PART NUMBER (ACH550 / ACH580) | DRIVE HP | DESC |
|---|---|---|---|---|---|
| **40RU000205-DATA / 40RU000606-DATA** | 40RU000205 | HD56FR579 | HK30WA360 / HK30WB369 | 3 | 40RU 1.7 HP 575V |
| **40RU000220-DATA / 40RU000608-DATA** | 40RU000220 | HD56FE577 | HK30WA360 / HK30WB369 | 3 | 40RU 2.4 HP 575V |
| **40RU000225-DATA / 40RU000609-DATA** | 40RU000225 | HD58FE577 | HK30WA361 / HK30WB370 | 5 | 40RU 3.7 HP 575V |
| **40RU000208-DATA / 40RU000607-DATA** | 40RU000208 | HD58FE577 | HK30WA361 / HK30WB370 | 5 | 40RU 3.7 HP 575V |

## Table 32 — ACH550/580 VFD Parameters, for 40RU Units with I/O Flex Controls (cont)

| LOOKUP VARIABLE | N. AMPS | N. HP | MAX AMPS | CROSS REFERENCE | |
|---|---|---|---|---|---|
| **VFD PARAMETERS** | **9906 / 99.06** | **9909 / 99.10** | **2003 / 30.17** | **EM_PKG** | **CL_PKG** |
| **40RU000205-DATA / 40RU000606-DATA** | 2.8 | 1.7 | 3.2 | 40RU480132 | — |
| **40RU000220-DATA / 40RU000608-DATA** | 3.8 | 2.4 | 4.4 | 40RU480013 | — |
| **40RU000225-DATA / 40RU000609-DATA** | 4.9 | 3.7 | 5.6 | 40RU480018 | — |
| **40RU000208-DATA / 40RU000607-DATA** | 4.5 | 3.7 | 5.2 | 40RU480135 | — |

LEGEND

— = HVAC Default, field does not require change.

## Table 33 — ACH550/580 VFD Common Parameters for 48/50 Units with ComfortLink Controls

| PARAMETERS ACH550/580 | DESCRIPTION | SETTING ACH550/580 |
|---|---|---|
| **9802 / 58.01** | COMM PROT SEL | 6 LEN / 8 LEN |
| **9907 / 99.08** | Motor Nominal Frequency | 60Hz |
| **1001 / 20.01** | EXT1 Commands | — |
| **1102 / 19.11** | EXT1/EXT2 Sel | — |
| **1103 / 28.11** | REF 1 Select | — |
| **1201 / 28.22** | Const Speed Sel | — |
| **1202 / 28.26** | Const Speed 1 | — |
| **1203 / 28.27** | Const Speed 2 | — |
| **1204 / 28.28** | Const Speed 3 | — |
| **1205 / 28.29** | Const Speed 4 | — |
| **1401 / 10.24** | Relay Output 1 | — |
| **1403 / 10.30** | Relay Output 3 | — |
| **1501 / 13.12** | AO1 Content Sel | — |
| **1601 / 20.40** | RUN ENABLE | — |
| **2007 / 30.13** | Minimum Frequency | — |
| **2008 / 30.14** | Maximum Frequency | — |
| **2101 / 21.19** | Start FCN | — |
| **2102 / 21.03** | Stop FCN | — |
| **2201 / 28.71** | ACCEL/DECEL | — |
| **2202 / 28.72** | ACCEL | — |
| **2203 / 28.73** | DECEL | — |
| **2606 / 97.01** | Switching Freq | — |
| **5101 / 51.01** | FBA Type | — |
| **5201 / 58.03** | Station ID | — |
| **5202 / 58.04** | Baud Rate | — |
| **5203 / 58.05** | Parity | — |
| **5301 / 58.25** | EFB Protocol ID | 0601 hex / NA |
| **5302 / 58.03** | EFB Station ID | 41 |
| **5303 / 58.04** | EFB Baud Rate | 38.4 kb/s |
| **5304 / 58.05** | EFB Parity | 8 NONE 1 |
| **5305 / 58.25** | EFB CTRL Profile | DCU PROFILE / Frequency |

LEGEND

— = HVAC Default, field does not require change.

## Table 34 — ACH550/580 VFD Parameters, for 48/50 Units with ComfortLink Controls

| VFD PARAMETERS | PKG ABB ACH550 | MOTOR PART NUMBER | VFD PART NUMBER (ACH550 / ACH580) | DRIVE HP | DESC |
|---|---|---|---|---|---|
| **48TM482683-DATA** | 48TM482683 | HD56FR233 | HK30WA352 / HK30WB359 | 3 | SRT 1.7 HP 230V |
| **48TM482686-DATA** | 48TM482686 | HD56FR463 | HK30WA356 / HK30WB364 | 3 | SRT 1.7 HP 460V |
| **48TM482689-DATA** | 48TM482689 | HD56FR579 | HK30WA360 / HK30WB369 | 3 | SRT 1.7 HP 575V |
| **48TM482682-DATA** | 48TM482682 | HD56FE653 | HK30WA352 / HK30WB359 | 3 | SRT 2.4 HP 230V |
| **48TM482694-DATA** | 48TM482694 | HD56FE653 | HK30WA356 / HK30WB364 | 3 | SRT 2.4 HP 460V |
| **48TM482681-DATA** | 48TM482681 | HD56FE577 | HK30WA360 / HK30WB369 | 3 | SRT 2.4 HP 575V |
| **48TM482692-DATA** | 48TM482692 | HD58FE654 | HK30WA352 / HK30WB359 | 3 | SRT 2.9 HP 230V |
| **48TM482687-DATA** | 48TM482687 | HD58FE654 | HK30WA356 / HK30WB364 | 3 | SRT 2.9 HP 460V |
| **48TM482684-DATA** | 48TM482684 | HD60FE656 | HK30WA353 / HK30WB360 | 5 | SRT 3.7 HP 230V |
| **48TM482693-DATA** | 48TM482693 | HD60FE656 | HK30WA357 / HK30WB365 | 5 | SRT 3.7 HP 460V |
| **48TM482690-DATA** | 48TM482690 | HD58FE577 | HK30WA361 / HK30WB370 | 5 | SRT 3.7 HP 575V |
| **48TM482685-DATA** | 48TM482685 | HD60FK658 | HK30WA354 / HK30WB361 | 7.5 | SRT 5.3 HP 230V |
| **48TM482688-DATA** | 48TM482688 | HD60FK658 | HK30WA358 / HK30WB366 | 7.5 | SRT 5.3 HP 460V |
| **48TM482691-DATA** | 48TM482691 | HD60FE576 | HK30WA362 / HK30WB371 | 7.5 | SRT 5.3 HP 575V |
| **50TM480915-DATA** | 50TM480915 | HD58FE654 | HK30WA352 / HK30WB359 | 3 | STR 2.9 HP 230V |
| **50TM480916-DATA** | 50TM480916 | HD58FE654 | HK30WA356 / HK30WB364 | 3 | STR 2.9 HP 460V |
| **50TM480917-DATA** | 50TM480917 | HD60FE656 | HK30WA353 / HK30WB360 | 5 | STR 3.7 HP 230V |
| **50TM480918-DATA** | 50TM480918 | HD60FE656 | HK30WA357 / HK30WB365 | 5 | STR 3.7 HP 460V |
| **50TM480919-DATA** | 50TM480919 | HD58FE577 | HK30WA361 / HK30WB370 | 5 | STR 3.7 HP 575V |
| **50TM480921-DATA** | 50TM480921 | HD60FK657 | HK30WA354 / HK30WB361 | 7.5 | STR 5.0 HP 230V |
| **50TM480922-DATA** | 50TM480922 | HD60FK657 | HK30WA358 / HK30WB366 | 7.5 | STR 5.0 HP 460V |
| **50TM480920-DATA** | 50TM480920 | HD60FK577 | HK30WA362 / HK30WB371 | 7.5 | STR 5.0 HP 575V |
| **50HE402817-DATA** | 50HE402817 | HD58FE654 | HK30WA352 / HK30WB359 | 3 | MRT 2.9 HP 230V |
| **50HE402822-DATA** | 50HE402822 | HD58FE654 | HK30WA356 / HK30WB364 | 3 | MRT 2.9 HP 460V |
| **50HE402818-DATA** | 50HE402818 | HD60FE656 | HK30WA353 / HK30WB360 | 5 | MRT 3.7 HP 230V |
| **50HE402823-DATA** | 50HE402823 | HD60FE656 | HK30WA357 / HK30WB365 | 5 | MRT 3.7 HP 460V |
| **50HE402827-DATA** | 50HE402827 | HD58FE577 | HK30WA361 / HK30WB370 | 5 | MRT 3.7 HP 575V |
| **50HE402819-DATA** | 50HE402819 | HD60FK657 | HK30WA354 / HK30WB361 | 7.5 | MRT 5.0 HP 230V |
| **50HE402824-DATA** | 50HE402824 | HD60FK657 | HK30WA358 / HK30WB366 | 7.5 | MRT 5.0 HP 460V |
| **50HE402828-DATA** | 50HE402828 | HD60FK577 | HK30WA362 / HK30WB371 | 7.5 | MRT 5.0 HP 575V |
| **50HE402820-DATA** | 50HE402820 | HD62FK654 | HK30WA354 / HK30WB361 | 7.5 | MRT 7.5 HP 230V |
| **50HE402825-DATA** | 50HE402825 | HD62FK654 | HK30WA358 / HK30WB366 | 7.5 | MRT 7.5 HP 460V |
| **50HE402829-DATA** | 50HE402829 | HD62FL576 | HK30WA362 / HK30WB371 | 7.5 | MRT 7.5 HP 575V |
| **50HE403639-DATA** | 50HE403639 | HD60FK658 | HK30WA354 / HK30WB361 | 7.5 | MRT 5.3 HP 230V |
| **50HE403640-DATA** | 50HE403640 | HD60FK658 | HK30WA358 / HK30WB366 | 7.5 | MRT 5.3 HP 460V |
| **50HE403641-DATA** | 50HE403641 | HD60FE576 | HK30WA362 / HK30WB371 | 7.5 | MRT 5.3 HP 575V |
| **50HE402821-DATA** | 50HE402821 | HD64FK654 | HK30WA355 / HK30WB362 | 10 | MRT 10.0 HP 230V |
| **50HE402826-DATA** | 50HE402826 | HD64FK654 | HK30WA359 / HK30WB367 | 10 | MRT 10.0 HP 460V |
| **50HE402830-DATA** | 50HE402830 | HD64FL576 | HK30WA363 / HK30WB372 | 10 | MRT 10.0 HP 575V |

## Table 34 — ACH550/580 VFD Parameters, for 48/50 Units with ComfortLink Controls (cont)

| LOOKUP VARIABLE | VOLTAGE | N. AMPS | N. RPM | N. HP | MAX AMPS | CROSS REFERENCE | |
|---|---|---|---|---|---|---|---|
| VFD PARAMETERS | 9905 / 99.07 | 9906 / 99.06 | 9908 / 99.09 | 9909 / 99.10 | 2003 / 30.17 | EM_PKG | CL_PKG |
| 48TM482683-DATA | 230 | 5.8 | 1725 | 1.7 | 6.7 | 48TM482532 | 48TM482683 |
| 48TM482686-DATA | 460 | 2.9 | 1725 | 1.7 | 3.3 | 48TM482535 | 48TM482686 |
| 48TM482689-DATA | 575 | 3.1 | 1725 | 1.7 | 3.6 | 48TM482538 | 48TM482689 |
| 48TM482682-DATA | 230 | 7.9 | 1725 | 2.4 | 9.1 | 48TM482531 | 48TM482682 |
| 48TM482694-DATA | 460 | 3.6 | 1725 | 2.4 | 4.1 | 48TM482593 | 48TM482694 |
| 48TM482681-DATA | 575 | 3.8 | 1725 | 2.4 | 4.4 | 48TM482530 | 48TM482681 |
| 48TM482692-DATA | 230 | 9.2 | 1725 | 2.9 | 10.6 | 48TM482591 | 48TM482692 |
| 48TM482687-DATA | 460 | 4.2 | 1725 | 2.9 | 4.8 | 48TM482536 | 48TM482687 |
| 48TM482684-DATA | 230 | 11.7 | 1725 | 3.7 | 13.5 | 48TM482533 | 48TM482684 |
| 48TM482693-DATA | 460 | 5.4 | 1725 | 3.7 | 6.2 | 48TM482592 | 48TM482693 |
| 48TM482690-DATA | 575 | 4.9 | 1725 | 3.7 | 5.6 | 48TM482539 | 48TM482690 |
| 48TM482685-DATA | 230 | 13.6 | 1740 | 5.3 | 15.6 | 48TM482534 | 48TM482685 |
| 48TM482688-DATA | 460 | 6.4 | 1740 | 5.3 | 7.4 | 48TM482537 | 48TM482688 |
| 48TM482691-DATA | 575 | 6 | 1725 | 5.3 | 6.9 | 48TM482540 | 48TM482691 |
| 50TM480915-DATA | 230 | 9.2 | 1725 | 2.9 | 10.6 | 50TM480822 | 50TM480915 |
| 50TM480916-DATA | 460 | 4.2 | 1725 | 2.9 | 4.8 | 50TM480842 | 50TM480916 |
| 50TM480917-DATA | 230 | 11.7 | 1725 | 3.7 | 13.5 | 50TM480837 | 50TM480917 |
| 50TM480918-DATA | 460 | 5.4 | 1725 | 3.7 | 6.2 | 50TM480838 | 50TM480918 |
| 50TM480919-DATA | 575 | 4.9 | 1725 | 3.7 | 5.6 | 50TM480821 | 50TM480919 |
| 50TM480921-DATA | 230 | 17.1 | 1760 | 5 | 19.7 | 50TM480824 | 50TM480921 |
| 50TM480922-DATA | 460 | 8.6 | 1760 | 5 | 9.9 | 50TM480843 | 50TM480922 |
| 50TM480920-DATA | 575 | 7.6 | 1745 | 5 | 8.7 | 50TM480823 | 50TM480920 |
| 50HE402817-DATA | 230 | 9.2 | 1725 | 2.9 | 10.6 | 50HE402582 | 50HE402817 |
| 50HE402822-DATA | 460 | 4.2 | 1725 | 2.9 | 4.8 | 50HE402587 | 50HE402822 |
| 50HE402818-DATA | 230 | 11.7 | 1725 | 3.7 | 13.5 | 50HE402583 | 50HE402818 |
| 50HE402823-DATA | 460 | 5.4 | 1725 | 3.7 | 6.2 | 50HE402588 | 50HE402823 |
| 50HE402827-DATA | 575 | 4.9 | 1725 | 3.7 | 5.6 | 50HE402592 | 50HE402827 |
| 50HE402819-DATA | 230 | 17.1 | 1760 | 5 | 19.7 | 50HE402584 | 50HE402819 |
| 50HE402824-DATA | 460 | 8.6 | 1760 | 5 | 9.9 | 50HE402589 | 50HE402824 |
| 50HE402828-DATA | 575 | 7.6 | 1745 | 5 | 8.7 | 50HE402593 | 50HE402828 |
| 50HE402820-DATA | 230 | 23.5 | 1760 | 7.5 | 27 | 50HE402585 | 50HE402820 |
| 50HE402825-DATA | 460 | 11.9 | 1760 | 7.5 | 13.7 | 50HE402590 | 50HE402825 |
| 50HE402829-DATA | 575 | 9 | 1750 | 7.5 | 10.4 | 50HE402594 | 50HE402829 |
| 50HE403639-DATA | 230 | 13.6 | 1740 | 5.3 | 15.6 | 50HE402584 | 50HE402819 |
| 50HE403640-DATA | 460 | 6.4 | 1740 | 5.3 | 7.4 | 50HE402589 | 50HE402824 |
| 50HE403641-DATA | 575 | 6 | 1725 | 5.3 | 6.9 | 50HE402593 | 50HE402828 |
| 50HE402821-DATA | 230 | 30.4 | 1755 | 10 | 35 | 50HE402586 | 50HE402821 |
| 50HE402826-DATA | 460 | 15.2 | 1755 | 10 | 17.5 | 50HE402591 | 50HE402826 |
| 50HE402830-DATA | 575 | 11 | 1755 | 10 | 12.7 | 50HE402595 | 50HE402830 |

## VFD REMOTE KEYPAD

NOTE: The following only applies when a unit with the factory-installed SAV™ option is equipped with the field-installed Remote VFD Keypad (Part Number: CRDISKKIT001A00) ACH550/ACS320 or (Part Number: CRDISKKIT003A00) ACH580.

On 48/50 Series single package rooftop units and 40RU fan coils equipped with the SAV option, the supply fan speed is controlled by a 3-phase VFD. See Fig. 6-23 for the location of the VFD in the units covered by this supplement.

The VFD is powered during normal operation to prevent condensation from forming on the boards during the off mode and is stopped by driving the speed to 0. The units use ABB VFDs. The interface wiring for the VFDs is shown in Fig. 29 and 30 (on page 21). Terminal designations are shown in the Terminal Designation table (see Tables 12 and 13 on page 21). Configurations are shown in the VFD Keypad Parameters tables (see Tables 38-44 on pages 83-90).

Details on ACH550/ACS320 operation with remote keypad start below. For details on remote keypad for ACH580 VFDs, see "ACH580 Operation with Remote Keypad" on page 77.

### ACH550/ACS320 Operation with Remote Keypad

The remote keypad used with ACH550/ACS320 VFDs is shown in Fig. 53. The functions of SOFT KEYS (1 and 2) change depending on what is displayed on the screen. The function of SOFT KEY 1 matches the word in the lower left-hand box on the display screen. The function of SOFT KEY 2 matches the word in the lower right-hand box on the display screen. If the box is empty, then the SOFT KEY does not have a function on that specific screen. The UP and DOWN keys are used to navigate through the menus. The OFF key is used to turn off the VFD. The AUTO key is used to change control of the drive to automatic control. The HAND key is used to change control of the drive to local (hand-held) control. The HELP button is used to access the help screens.

For the VFD to operate on the units covered by this document, the drive must be set in AUTO mode. The word "AUTO" will appear in the upper left hand corner of the VFD display. Press the AUTO button to set the drive in AUTO mode.

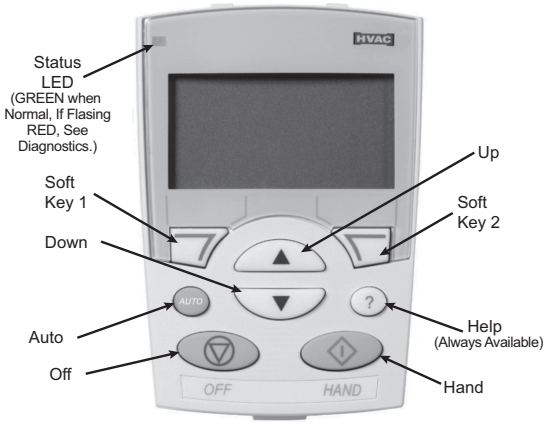


**Fig. 53 — ACH550/ACS320 VFD Keypad**

START UP WITH ASSISTANT

Initial start-up has been performed at the factory. Use of the start up assistant will override factory VFD configurations.

**⚠ CAUTION**

CONFIGURATION OVERRIDE HAZARD

DO NOT USE ABB OR CARRIER START-UP ASSISTANT ON THIS VFD APPLICATION! Use of start-up assistant will override the factory VFD configurations!

START UP BY CHANGING PARAMETERS INDIVIDUALLY

Initial start-up is performed at the factory. To start up the VFD by changing individual parameters, perform the following procedure:

1. Select MENU (SOFT KEY 2). The Main menu will be displayed.
2. Use the UP or DOWN keys to highlight PARAMETERS on the display screen and press ENTER (SOFT KEY 2).
3. Use the UP or DOWN keys to highlight the desired parameter group and press SEL (SOFT KEY 2).
4. Use the UP or DOWN keys to highlight the desired parameter and press EDIT 320/550 (SOFT KEY 2).
5. Use the UP or DOWN keys to change the value of the parameter.
6. Press SAVE (SOFT KEY 2) to store the modified value. Press CANCEL (SOFT KEY 1) to keep the previous value. Any modifications that are not saved will not be changed.
7. Choose another parameter or press EXIT/BACK (SOFT KEY 1) to return to the listing of parameter groups. Continue until all the parameters have been configured and then press EXIT/BACK (SOFT KEY 1) to return to the main menu.

NOTE: The current parameter value appears above the highlight parameter. To view the default parameter value, press the UP and DOWN keys simultaneously. To restore the default factory settings, select the application macro "HVAC Default." ACH550/ASC320 only.

### ACH550/ACS320 VFD Modes

The VFD has several different modes for configuring, operating, and diagnosing the VFD. The modes are:

1. Standard Display mode — shows drive status information and operates the drive
2. Parameters mode — edits parameter values individually
3. Start-up Assistant mode — guides the start up and configuration
4. Changed Parameters mode — shows all changed parameters
5. Drive Parameter Backup mode — stores or uploads the parameters
6. Clock Set mode — sets the time and date for the drive
7. I/O Settings mode — checks and edits the I/O settings

STANDARD DISPLAY MODE

Use the standard display mode to read information on the drive status and operate the drive. To reach the standard display mode, press EXIT until the LCD display shows status information as described below. (See Fig. 54.)

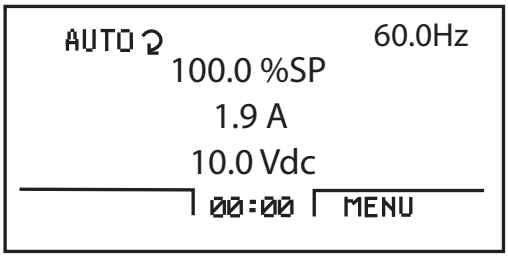


**Fig. 54 — Standard Display Example**

The top line of the LCD display shows the basic status information of the drive. The HAND icon indicates that the drive control is local from the control panel. The AUTO icon indicates that the drive is in remote control mode, such as the basic I/O or field bus.

The arrow icon indicates the drive and motor rotation status. A rotating arrow (clockwise or counterclockwise) indicates that

the drive is running and at set point and the shaft direction is forward or reverse. A rotating blinking arrow indicates that the drive is running but not at set point. A stationary arrow indicates that the drive is stopped. For the units covered in this manual, the correct display rotation is clockwise.

The upper right corner shows the frequency set point that the drive will maintain.

Using parameter group 34, the middle of the LCD display can be configured to display 3 parameter values. The default display shows parameters 0103 (OUTPUT FREQ) in percent speed, 0104 (CURRENT) in amperes, and 0120 (AI1) in voltage DC.

The bottom corners of the LCD display show the functions currently assigned to the two soft keys. The lower middle displays the current time (if configured to show the time).

The first time the drive is powered up, it is in the OFF mode. To switch to local hand-held control and control the drive using the control panel, press and hold the HAND button. Pressing the HAND button switches the drive to hand control while keeping the drive running. Press the AUTO button to switch to remote input control. To start the drive press the HAND or AUTO buttons, to stop the drive press the OFF button.

To adjust the speed in HAND mode, press the UP or DOWN buttons (the reference changes immediately). The reference can be modified in the local control (HAND) mode, and can be parameterized (using Group 11 reference select) to also allow modification in the remote control mode.

PARAMETERS MODE

The Parameters mode is used to change the parameters on the drive. To change parameters, perform the following procedure:

1. Select MENU (SOFT KEY 2). The Main menu will be displayed.
2. Use the UP or DOWN keys to highlight PARAMETERS on the display screen and press ENTER (SOFT KEY 2).
3. Use the UP or DOWN keys to highlight the desired parameter group and press SEL (SOFT KEY 2).
4. Use the UP or DOWN keys to highlight the desired parameter and press EDIT (SOFT KEY 2).
5. Use the UP or DOWN keys to change the value of the parameter.
6. Press SAVE (SOFT KEY 2) to store the modified value. Press CANCEL (SOFT KEY 1) to keep the previous value. Any modifications that are not saved will not be changed.
7. Choose another parameter or press EXIT (SOFT KEY 1) to return to the listing of parameter groups. Continue until all the parameters have been configured and then press EXIT (SOFT KEY 1) to return to the main menu.

NOTE: The current parameter value appears above the highlight parameter. To view the default parameter value, press the UP and DOWN keys simultaneously. To restore the default factory settings, select the Carrier application macro.

CHANGED PARAMETERS MODE

The Changed Parameters mode is used to view and edit recently changed parameters on the drive. To view the changed parameters, perform the following procedure:

1. Select MENU (SOFT KEY 2). The Main menu will be displayed.
2. Use the UP or DOWN keys to highlight CHANGED PAR on the display screen and press ENTER (SOFT KEY 2). A list of the recently changed parameters will be displayed.
3. Use the UP or DOWN keys to highlight the desired parameter group and press EDIT (SOFT KEY 2) to change the parameter if desired.
4. Press EXIT (SOFT KEY 1) to exit the Changed Parameters mode.

DRIVE PARAMETER BACKUP MODE

The drive parameter back up mode is used to export the parameters from one drive to another. The parameters can be uploaded from a VFD to the removable control panel. The control panel can then be transferred to another drive and the parameters downloaded into memory.

Depending on the motor and application, there are two options available. The first option is to download all parameters. This copies both application and motor parameters to the drive from the control panel. This is recommended when using the same application for drives of the same size. This can also be used to create a backup of the parameters group for the drive.

The second option downloads only the application parameters to the drive. This is recommended when using the same application for drives of different sizes. Parameters 9905, 9906, 9907, 9908, 9909, 1605, 1607, 5201, and group 51 parameters and internal motor parameters are not copied.

***Upload All Parameters***

To upload and store parameters in the control panel from the VFD, perform the following procedure:

1. Select MENU (SOFT KEY 2). The Main menu will be displayed.
2. Use the UP or DOWN keys to highlight PAR BACKUP on the display screen and press ENTER (SOFT KEY 2).
3. Use the UP or DOWN keys to highlight UPLOAD TO PANEL and press SEL (SOFT KEY 2).
4. The text “Copying Parameters” will be displayed with a progress indicator. To stop the process, select ABORT (SOFT KEY 1).
5. When the upload is complete, the text “Parameter upload successful” will be displayed.
6. The display will then return to the PAR BACKUP menu. Select EXIT (SOFT KEY 1) to return to the main menu.
7. The control panel can now be disconnected from the drive.

***Download All Parameters***

To download all parameters from the control panel to the VFD, perform the following procedure:

1. Install the control panel with the correct parameters onto the VFD.
2. Select MENU (SOFT KEY 2). The Main menu will be displayed.
3. Use the UP or DOWN keys to highlight PAR BACKUP on the display screen and press ENTER (SOFT KEY 2).
4. Use the UP or DOWN keys to highlight DOWNLOAD TO DRIVE ALL and press SEL (SOFT KEY 2).
5. The text “Restoring Parameters” will be displayed with a progress indicator. To stop the process, select ABORT (SOFT KEY 1).
6. When the download is complete, the text “Parameter download successful” will be displayed.
7. The display will then return to the PAR BACKUP menu. Select EXIT (SOFT KEY 1) to return to the main menu.
8. The control panel can now be disconnected from the drive.

***Download Application Parameters***

To download application parameters only to the control panel from the VFD, perform the following procedure:

1. Install the control panel with the correct parameters onto the VFD.
2. Select MENU (SOFT KEY 2). The Main menu will be displayed.
3. Use the UP or DOWN keys to highlight PAR BACKUP on the display screen and press ENTER (SOFT KEY 2).

4. Use the UP or DOWN keys to highlight DOWNLOAD APPLICATION and press SEL (SOFT KEY 2).
5. The text "Downloading Parameters (partial)" will be displayed with a progress indicator. To stop the process, select ABORT (SOFT KEY 1).
6. When the download is complete, the text "Parameter download successful" will be displayed.
7. The display will then return to the PAR BACKUP menu. Select EXIT (SOFT KEY 1) to return to the main menu.
8. The control panel can now be disconnected from the drive.

CLOCK SET MODE

Use the clock set mode to set the date and time for the internal clock of the VFD. In order to use the timer functions of the VFD control, the internal clock must be set. The date is used to determine weekdays and is visible in the fault logs.

To set the clock, perform the following procedure:

1. Select MENU (SOFT KEY 2). The Main menu will be displayed.
2. Use the UP or DOWN keys to highlight CLOCK SET on the display screen and press ENTER (SOFT KEY 2). The clock set parameter list will be displayed.
3. Use the UP or DOWN keys to highlight CLOCK VISIBILITY and press SEL (SOFT KEY 2). This parameter is used to display or hide the clock on the screen. Use the UP or DOWN keys to change the parameter setting. Press OK (SOFT KEY 2) to save the configuration and return to the Clock Set menu.
4. Use the UP or DOWN keys to highlight SET TIME and press SEL (SOFT KEY 2). Use the UP or DOWN keys to change the hours and minutes. Press OK (SOFT KEY 2) to save the configuration and return to the Clock Set menu.
5. Use the UP or DOWN keys to highlight TIME FORMAT and press SEL (SOFT KEY 2). Use the UP or DOWN keys to change the parameter setting. Press OK (SOFT KEY 2) to save the configuration and return to the Clock Set menu.
6. Use the UP or DOWN keys to highlight SET DATE and press SEL (SOFT KEY 2). Use the UP or DOWN keys to change the day, month, and year. Press OK (SOFT KEY 2) to save the configuration and return to the Clock Set menu.
7. Use the UP or DOWN keys to highlight DATE FORMAT and press SEL (SOFT KEY 2). Use the UP or DOWN keys to change the parameter setting. Press OK (SOFT KEY 2) to save the configuration and return to the Clock Set menu.
8. Press EXIT (SOFT KEY 1) twice to return to the main menu.

I/O SETTINGS MODE

Use the I/O Settings mode to view and edit the I/O settings.

To configure the I/O settings, perform the following procedure:

1. Select MENU (SOFT KEY 2). The Main menu will be displayed.
2. Use the UP or DOWN keys to highlight I/O SETTINGS on the display screen and press ENTER (SOFT KEY 2). The I/O Settings parameter list will be displayed.
3. Use the UP or DOWN keys to highlight the desired I/O setting and press SEL (SOFT KEY 2).
4. Use the UP or DOWN keys to select the parameter to view. Press OK (SOFT KEY 2).
5. Use the UP or DOWN keys to change the parameter setting. Press SAVE (SOFT KEY 2) to save the configuration. Press CANCEL (SOFT KEY 1) to keep the previous value. Any modifications that are not saved will not be changed.
6. Press EXIT (SOFT KEY 1) twice to return to the main menu.

## ACH550/ACS320 VFD Diagnostics

The drive detects error situations and reports them using:

1. Green and red LEDs on the body of the drive (located under the keypad)
2. Status LED on the control panel
3. Control panel display
4. The Fault Word and Alarm Word parameter bits (parameters 0305 to 0309)

The form of the display depends on the severity of the error. The user can specify the severity for many errors by directing the drive to ignore the error situation, report the situation as an alarm, or report the situation as a fault.

FAULTS (RED LED LIT)

The VFD signals that it has detected a severe error, or fault, by:

1. Enabling the red LED on the drive (LED is either steady or flashing)
2. Setting an appropriate bit in a Fault Word parameter (0305 to 0307)
3. Overriding the control panel display with the display of a fault code
4. Stopping the motor (if it was on)

ALARMS (GREEN LED FLASHING)

For less severe errors, called alarms, the diagnostic display is advisory. For these situations, the drive is simply reporting that it had detected something unusual. In these situations, the drive:

1. Flashes the green LED on the drive (does not apply to alarms that arise from control panel operation errors)
2. Sets an appropriate bit in an Alarm Word parameter (0308 or 0309)
3. Overrides the control panel display with the display of an alarm code and/or name

Alarm messages disappear from the control panel display after a few seconds. The message returns periodically as long as the alarm condition exists. See Table 35 for a list of alarm codes.

## Correcting Faults

The recommended corrective action for faults is shown in the Fault Codes Table 35. The VFD can also be reset to remove the fault. If an external source for a start command is selected and is active, the VFD may start immediately after fault reset.

To reset a fault indicated by a flashing red LED, turn off the power for 5 minutes. To reset a fault indicated by a red LED (not flashing), press RESET from the control panel or turn off the power for 5 minutes. Depending on the value of parameter 1604 (FAULT RESET SELECT), digital input or serial communication could also be used to reset the drive. When the fault has been corrected, the motor can be started.

## History

For reference, the last three fault codes are stored into parameters 0401, 0412, 0413. For the most recent fault (identified by parameter 0401), the drive stores additional data (in parameters 0402 - 0411) to aid in troubleshooting a problem. For example, a parameter 0404 stores the motor speed at the time of the fault. To clear the fault history (all of Group 04, Fault History parameters), follow these steps:

1. In the control panel, Parameters mode, select parameter 0401.
2. Press EDIT.
3. Press the UP and DOWN buttons simultaneously.
4. Press SAVE.

## CORRECTING ALARMS

To correct alarms, first determine if the alarm requires any corrective action (action is not always required). Use Table 36 to find and address the root cause of the problem.

If diagnostics troubleshooting has determined that the drive is defective during the warranty period, contact Carrier.

### Table 35 — ACH550/ACS320 Fault Codes

| FAULT CODE | FAULT NAME IN PANEL | DESCRIPTION AND RECOMMENDED CORRECTIVE ACTION |
|---|---|---|
| | | |
| 1 | OVERCURRENT | Output current is excessive. Check for excessive motor load, insufficient acceleration time (parameters 2202 ACCELER TIME 1, default 30 seconds), or faulty motor, motor cables or connections. |
| 2 | DC OVERVOLT | Intermediate circuit DC voltage is excessive. Check for static or transient over voltages in the input power supply, insufficient deceleration time (parameters 2203 DECELER TIME 1, default 30 seconds), or undersized brake chopper (if present). |
| 3 | DEV OVERTEMP | Drive heat sink is overheated. Temperature is at or above 115°C (239°F). Check for fan failure, obstructions in the air flow, dirt or dust coating on the heat sink, excessive ambient temperature, or excessive motor load. |
| 4 | SHORT CIRC | Fault current. Check for short-circuit in the motor cable(s) or motor or supply disturbances. |
| 5 | OVERLOAD | Inverter overload condition. The drive output current exceeds the ratings. |
| 6 | DC UNDERVOLT | Intermediate circuit DC voltage is not sufficient. Check for missing phase in the input power supply, blown fuse, or under voltage on main circuit. |
| 7 | AI1 LOSS | Analog input 1 loss. Analog input value is less than AI1 FLT LIMIT (3021). Check source and connection for analog input and parameter settings for AI1 FLT LIMIT (3021) and 3001 AI<MIN FUNCTION. |
| 8 | AI2 LOSS | Analog input 2 loss. Analog input value is less than AI2 FLT LIMIT (3022). Check source and connection for analog input and parameter settings for AI2 FLT LIMIT (3022) and 3001 AI<MIN FUNCTION. |
| 9 | MOT OVERTEMP | Motor is too hot, as estimated by the drive. Check for overloaded motor. Adjust the parameters used for the estimate (3005 - 3009). Check the temperature sensors and Group 35 parameters. |
| 10 | PANEL LOSS | Panel communication is lost and either drive is in local control mode (the control panel displays LOC), or drive is in remote control mode (REM) and is parameterized to accept start/stop, direction or reference from the control panel.<br>To correct check the communication lines and connections. Check parameter 3002 PANEL COMM ERROR, parameters in Group 10: Command Inputs and Group 11:Reference Select (if drive operation is REM). |
| 11 | ID RUN FAIL | The motor ID run was not completed successfully. Check motor connections. |
| 12 | MOTOR STALL | Motor or process stall. Motor is operating in the stall region. Check for excessive load or insufficient motor power. Check parameters 3010 - 3012. |
| 13 | RESERVED | Not used. |
| 14 | EXT FAULT 1 | Digital input defined to report first external fault is active. See parameter 3003 EXTERNAL FAULT 1. |
| 15 | EXT FAULT 2 | Digital input defined to report second external fault is active. See parameter 3004 EXTERNAL FAULT 2. |
| 16 | EARTH FAULT | The load on the input power system is out of balance. Check for faults in the motor or motor cable. Verify that motor cable does not exceed maximum specified length. |
| 17 | UNDERLOAD | Motor load is lower than expected. Check for disconnected load. Check parameters 3013 UNDERLOAD FUNCTION through 3015 UNDERLOAD CURVE. |
| 18 | THERM FAIL | Internal fault. The thermistor measuring the internal temperature of the drive is open or shorted. Contact Carrier. |
| 19 | OPEX LINK | Internal fault. A communication-related problem has been detected between the OMIO and OINT boards. Contact Carrier. |
| 20 | OPEX PWR | Internal fault. Low voltage condition detected on the OINT board. Contact Carrier. |
| 21 | CURR MEAS | Internal fault. Current measurement is out of range. Contact Carrier. |
| 22 | SUPPLY PHASE | Ripple voltage in the DC link is too high. Check for missing main phase or blown fuse. |
| 23 | RESERVED | Not used. |
| 24 | OVERSPEED | Motor speed is greater than 120% of the larger (in magnitude) of 2001 MINIMUM SPEED or 2002 MAXIMUM SPEED parameters. Check parameter settings for 2001 and 2002. Check adequacy of motor braking torque. Check applicability of torque control. Check brake chopper and resistor. |
| 25 | RESERVED | Not used. |
| 26 | DRIVE ID | Internal fault. Configuration block drive ID is not valid. |
| 27 | CONFIG FILE | Internal configuration file has an error. Contact Carrier. |
| 28 | SERIAL 1 ERR | Field bus communication has timed out. Check fault setup (3018 COMM FAULT FUNC and 3019 COMM FAULT TIME). Check communication settings (Group 51 or 53 as appropriate). Check for poor connections and/or noise on line. |
| 29 | EFB CON FILE | Error in reading the configuration file for the field bus adapter. |
| 30 | FORCE TRIP | Fault trip forced by the field bus. See the field bus reference literature. |
| 31 | EFB 1 | Fault code reserved for the EFB protocol application. The meaning is protocol dependent. |
| 32 | EFB 2 | Fault code reserved for the EFB protocol application. The meaning is protocol dependent. |
| 33 | EFB 3 | Fault code reserved for the EFB protocol application. The meaning is protocol dependent. |
| 34 | MOTOR PHASE | Fault in the motor circuit. One of the motor phases is lost. Check for motor fault, motor cable fault, thermal relay fault, or internal fault. |
| 35 | OUTP WIRING | Error in power wiring suspected. Check that input power wired to drive output. Check for ground faults. |
| 101 - 105 | SYSTEM ERROR | Error internal to the drive. Contact Carrier and report the error number. |
| 1000 | PAR HZRPM | Parameter values are inconsistent. Check for any of the following:<br>2001 MINIMUM SPEED > 2002 MAXIMUM SPEED<br>2007 MINIMUM FREQ > 2008 MAXIMUM FREQ<br>2001 MINIMUM SPEED / 9908 MOTOR NOM SPEED is outside of the range: -128/+128<br>2002 MAXIMUM SPEED / 9908 MOTOR NOM SPEED is outside of the range: -128/+128<br>2007 MINIMUM FREQ / 9907 MOTOR NOM FREQ is outside of the range: - 128/+128<br>2008 MAXIMUM FREQ / 9907 MOTOR NOM FREQ is outside of the range: -128/+128 |
| 1001 | PAR PFA REFNG | Parameter values are inconsistent. Check that 2007 MINIMUM FREQ is negative, when 8123 PFA ENABLE is active. |
| 1002 | PAR PFA IOCNF | Parameter values are inconsistent. The number of programmed PFA relays does not match with Interlock configuration, when 8123 PFA ENABLE is active. Check consistency of RELAY OUTPUT parameters 1401 - 1403, and 1410 - 1412. Check 8117 NR OF AUX MOTORS, 8118 AUTOCHANGE INTERV, and 8120 INTERLOCKS. |

## Table 35 — ACH550/ACS320 Fault Codes (cont)

| FAULT CODE | FAULT NAME IN PANEL | DESCRIPTION AND RECOMMENDED CORRECTIVE ACTION |
|---|---|---|
| **1003** | PAR AI SCALE | Parameter values are inconsistent. Check that parameter 1301 AI 1 MIN > 1302 AI 1 MAX and that parameter 1304 AI 2 MIN > 1305 AI 2 MAX. |
| **1004** | PAR AO SCALE | Parameter values are inconsistent. Check that parameter 1504 AO 1 MIN > 1505 AO 1 MAX and that parameter 1510 AO 2 MIN > 1511 AO 2 MAX. |
| **1005** | PAR PCU 2 | Parameter values for power control are inconsistent: Improper motor nominal kVA or motor nominal power. Check the following parameters:<br>1.1 < (9906 MOTOR NOM CURR * 9905 MOTOR NOM VOLT * 1.73 / PN) < 2.6<br>Where: PN = 1000 * 9909 MOTOR NOM POWER (if units are kW) or PN = 746<br>* 9909 MOTOR NOM POWER (if units are HP, e.g., in US) |
| **1006** | PAR EXT RO | Parameter values are inconsistent. Check the extension relay module for connection and 1410 - 1412 RELAY OUTPUTS 4 - 6 have non-zero values. |
| **1007** | PAR FBUS | Parameter values are inconsistent. Check that a parameter is set for field bus control (e.g., 1001 EXT1 COMMANDS = 10 (COMM)), but 9802 COMM PROT SEL = 0. |
| **1008** | PAR PFA MODE | Parameter values are inconsistent. The 9904 MOTOR CTRL MODE must = 3 (SCALAR SPEED) when 8123 PFA ENABLE activated. |
| **1009** | PAR PCU 1 | Parameter values for power control are inconsistent or improper motor nominal frequency or speed. Check for both of the following:<br>1 < (60 * 9907 MOTOR NOM FREQ / 9908 MOTOR NOM SPEED < 16<br>0.8 < 9908 MOTOR NOM SPEED / (120 * 9907 MOTOR NOM FREQ / Motor poles) < 0.992 |
| **1010** | OVERRIDE/PFA CONFLICT | Override mode is enabled and PFA is activated at the same time. This cannot be done because PFA interlocks cannot be observed in the override mode. |

## Table 36 — ACH550/ACS320 Alarm Codes

| ALARM CODE | ALARM NAME IN PANEL | DESCRIPTION AND RECOMMENDED CORRECTIVE ACTION |
|---|---|---|
| **2001** | — | Reserved |
| **2002** | — | Reserved |
| **2003** | — | Reserved |
| **2004** | DIR LOCK | The change in direction being attempted is not allowed. Do not attempt to change the direction of motor rotation, or Change parameter 1003 DIRECTION to allow direction change (if reverse operation is safe). |
| **2005** | I/O COMM | Field bus communication has timed out. Check fault setup (3018 COMM FAULT FUNC and 3019 COMM FAULT TIME). Check communication settings (Group 51 or 53 as appropriate). Check for poor connections and/or noise on line. |
| **2006** | AI1 LOSS | Analog input 1 is lost, or value is less than the minimum setting. Check input source and connections. Check the parameter that sets the minimum (3021) and the parameter that sets the Alarm/Fault operation (3001). |
| **2007** | AI2 LOSS | Analog input 2 is lost, or value is less than the minimum setting. Check input source and connections. Check parameter that sets the minimum (3022) and the parameter that sets the Alarm/Fault operation (3001). |
| **2008** | PANEL LOSS | Panel communication is lost and either the VFD is in local control mode (the control panel displays HAND), or the VFD is in remote control mode (AUTO) and is parameterized to accept start/stop, direction or reference from the control panel. To correct, check the communication lines and connections, Parameter 3002 PANEL LOSS, and parameters in groups 10 COMMAND INPUTS and 11 REFERENCE SELECT (if drive operation is REM). |
| **2009** | — | Reserved |
| **2010** | MOT OVERTEMP | Motor is hot, based on either the VFD estimate or on temperature feedback. This alarm warns that a Motor Overload fault trip may be near. Check for overloaded motor. Adjust the parameters used for the estimate (3005 - 3009). Check the temperature sensors and Group 35 parameters. |
| **2011** | UNDERLOAD | Motor load is lower than expected. This alarm warns that a Motor Underload fault trip may be near. Check that the motor and drive ratings match (motor is NOT undersized for the drive). Check the settings on parameters 3013 to 3015. |
| **2012** | MOTOR STALL | Motor is operating in the stall region. This alarm warns that a Motor Stall fault trip may be near. |
| **2013**[a] | AUTORESET | This alarm warns that the drive is about to perform an automatic fault reset, which may start the motor. To control automatic reset, use parameter group 31 (AUTOMATIC RESET). |
| **2014** | AUTOCHANGE | This alarm warns that the PFA autochange function is active. To control PFA, use parameter group 81 (PFA) and the Pump Alternation macro. |
| **2015** | PFA INTERLOCK | This alarm warns that the PFA interlocks are active, which means that the drive cannot start any motor (when Autochange is used), or a speed regulated motor (when Autochange is not used). |
| **2016** | — | Reserved |
| **2017**[a] | OFF BUTTON | This alarm indicates that the OFF button has been pressed. |
| **2018** | PID SLEEP | This alarm warns that the PID sleep function is active, which means that the motor could accelerate when the PID sleep function ends. To control PID sleep, use parameters 4022 - 4026 or 4122 - 4126. |
| **2019** | ID RUN | The VFD is performing an ID run. |
| **2020** | OVERRIDE | Override mode is activated. |
| **2021** | START ENABLE 1 MISSING | This alarm warns that the Start Enable 1 signal is missing. To control Start Enable 1 function, use parameter 1608. To correct, check the digital input configuration and the communication settings. |
| **2022** | START ENABLE 2 MISSING | This alarm warns that the Start Enable 2 signal is missing. To control Start Enable 2 function, use parameter 1609. To correct, check the digital input configuration and the communication settings. |
| **2023** | EMERGENCY STOP | Emergency stop is activated. |

NOTE(S):

a. This alarm is not indicated by a relay output, even when the relay output is configured to indicate alarm conditions, parameter 1401 RELAY OUTPUT = 5 (ALARM) or 16 (FLT/ALARM).

## Reset After Using Start-Up Assistant

**⚠ CAUTION**

CONFIGURATION OVERRIDE HAZARD

DO NOT USE ABB OR CARRIER START-UP ASSISTANT ON THIS VFD APPLICATION! Use of start-up assistant will override the factory VFD configurations!

The following section details how to reset the VFD after accidentally using Start-Up Assistant.

When the VFD has been incorrectly programmed by using Start-Up Assistant, the drive may be locked in an override loop because of motor ID Run Fail (error code 11) and First Start (error code 2025).

Use the following procedure to reset the factory configurations for ACS320 VFDs:

1. Disconnect unit power. Lock-out/tag out.
2. Remove the VFD's terminal cover.
3. Disconnect the D11 input at terminal 12. The terminals are numbered on the bottom of the block (see Fig. 55 for the location of terminal block that contains terminal 12).
4. Connect the VFD Keypad accessory to the VFD (if not already connected).

NOTE: The VFD Keypad is a field-installed accessory; it is not included with the factory-installed VFD option.

5. Go immediately to parameter 1705 OVERRIDE ENABLE and select "Off".

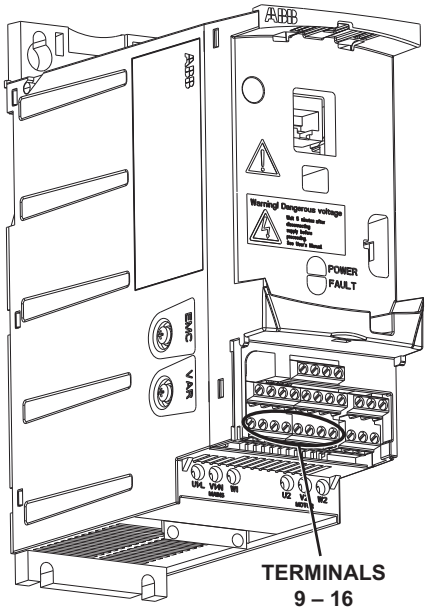


**Fig. 55 — ACS320 Terminal Blocks**

6. At this point, providing you have a clean backup of the drive, you can select "DOWNLOAD FULL SET" from 'PAR BACKUP" from the Main Menu.
   If you do not have a clean backup the drive will have to be manually programmed following the instructions in this document.
7. When the correct parameters have been uploaded, disconnect power to the unit, reconnect DI1 to Terminal 12, and replace the terminal cover.
8. Reconnect power to the unit. The VFD is now commissioned from the backup file.

Use the following procedure to reset the factory configurations for ACH550 VFDs:

1. Disconnect unit power. Lock-out/tag-out.
2. Remove the VFD's front cover (see Fig. 39 on page 31).
3. Disconnect the DI1 input at Terminal 13 (see Fig. 56 for location of DI1).
4. Connect the VFD Keypad accessory to the VFD (if not already connected).

NOTE: The VFD Keypad is a field-installed accessory; it is not included with the factory-installed VFD option.

5. With the wire disconnected, use the keypad to stop the loop and enter "358" in parameter 1704 OVERRIDE PASS CODE.
6. Go immediately to parameter 1705 OVERRIDE ENABLE and select "Off".
7. At this point, providing you have a clean backup of the drive, you can select "DOWNLOAD FULL SET" from "PAR BACKUP" from the Main Menu.
8. If you do not have a clean backup the drive will have to be manually programmed following the instructions in this document.
9. When the correct parameters have been uploaded, disconnect power to the unit, reconnect DI1 to Terminal 13, and replace the VFD cover.
10. Reconnect power to the unit. The VFD is now commissioned from the backup file.

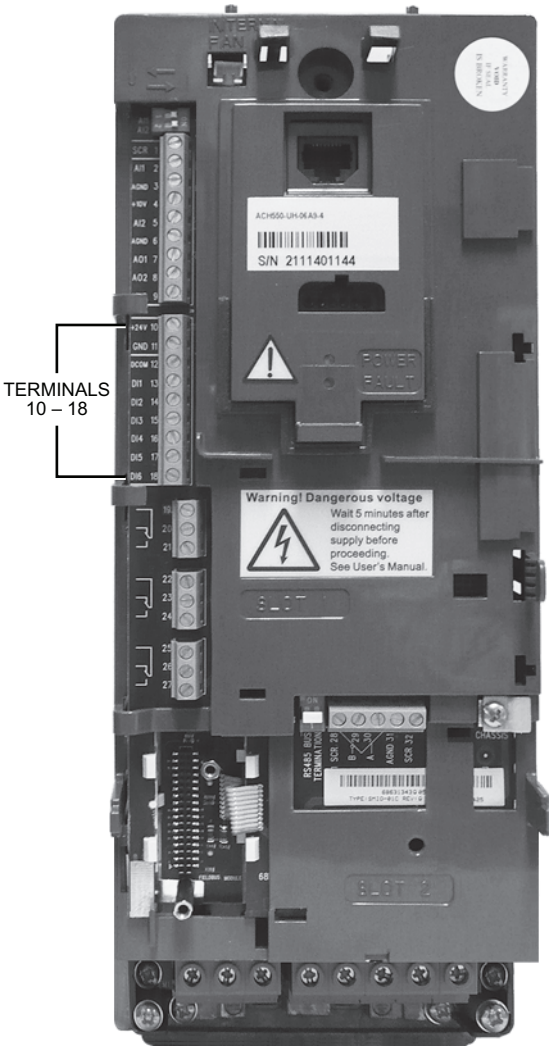


**Fig. 56 — Terminal Block Location on ACH550 VFD**

## ACH580 Operation with Remote Keypad

The VFD keypad is shown in Fig. 57 and Fig 58. The functions of the Left and Right Softkeys ( and ) change depending on what is displayed on the screen. The function of Left Softkey matches the word in the lower left-hand box on the display screen. The function of Right Softkey matches the word in the lower right-hand box on the display screen. If the box is empty, then the Softkey does not have a function on that specific screen. The Arrow Keys are used to navigate through the menus. The Off key is used to turn off the VFD. The AUTO key is used to change control of the drive to automatic control. The Hand key is used to change control of the drive to local (handheld) control. The Help key is used to access the help screens.

For the VFD to operate on the units covered by this document, the drive must be set in AUTO mode. The word "AUTO" will appear in the upper left hand corner of the VFD display. Press the AUTO button to set the drive in AUTO mode.

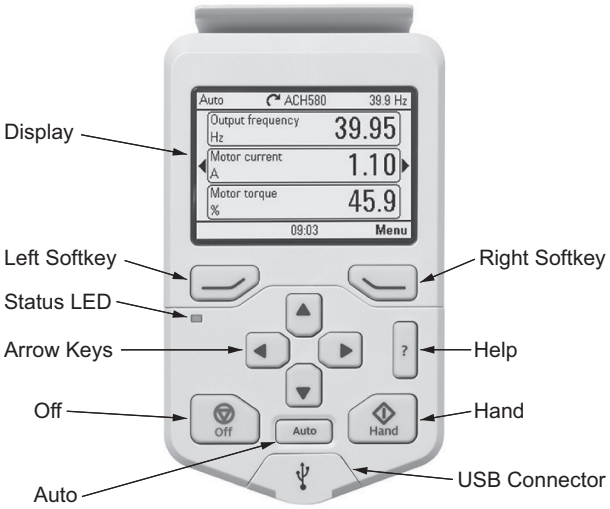


**Fig. 57 — ACH580 VFD Keypad — Front**

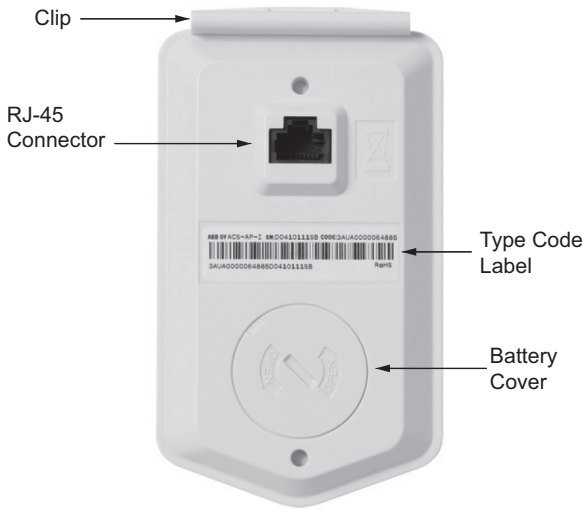


**Fig. 58 — ACH580 VFD Keypad — Back**

FIRST START ASSISTANT

Initial start-up has been performed at the factory. Use of the start up assistant will override factory VFD configurations.

**⚠ CAUTION**

CONFIGURATION OVERRIDE HAZARD

DO NOT USE ABB OR CARRIER FIRST START ASSISTANT ON THIS VFD APPLICATION! Use of first start assistant will override the factory VFD configurations!

Use the following procedure to reset the factory configurations for ACH580 VFDs:

1. Disconnect unit power. Lock-out/tag-out.
2. Remove the VFD's front cover.
3. Disconnect the DI1 input at Terminal 13 (see Fig. 59 for location of DI1).

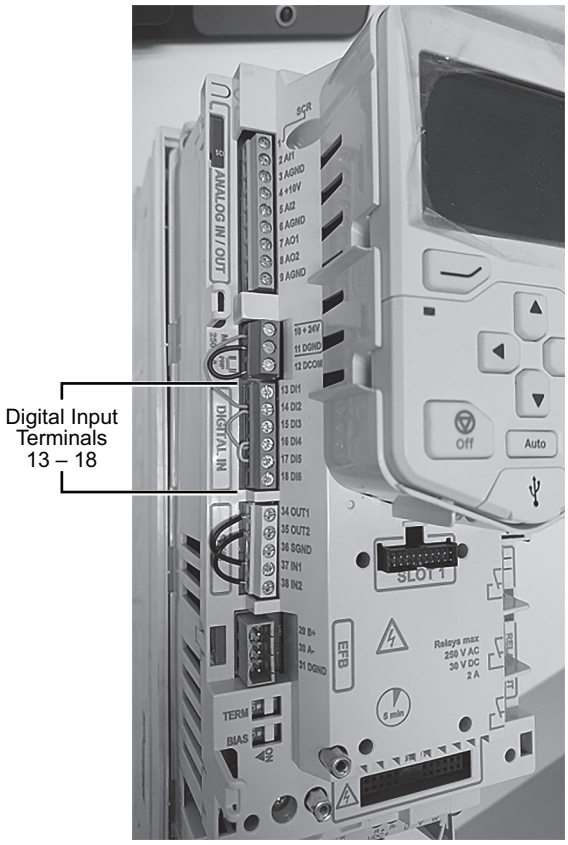


**Fig. 59 — Digital Input Terminal Block Location on ACH580 VFD**

4. Connect the VFD Keypad accessory to the VFD (if not already connected).

NOTE: The VFD Keypad is a field-installed accessory; it is not included with the factory-installed VFD option.

5. At this point, providing you have a clean backup of the drive, you can select "RESTORE" from "BACKUP" Menu from the Main Menu.

   Please Note: To restore a backup, the drive has to be in Local control.
6. If you do not have a clean backup the drive will have to be manually programmed following the instructions in this document.
7. When the correct parameters have been uploaded, disconnect power to the unit, reconnect DI1 to Terminal 13, and replace the VFD cover.

8. Reconnect power to the unit. The VFD is now commissioned from the backup file.

START UP BY CHANGING PARAMETERS INDIVIDUALLY

Initial start-up is performed at the factory. To start up the VFD by changing individual parameters, perform the following procedure:

1. Select MENU (Press ). The Main menu is displayed.
2. Use the UP or DOWN keys to highlight PARAMETERS on the display screen and press ENTER (Press ).
3. Use the UP or DOWN keys to highlight the desired parameter group and press SEL (Press ).
4. Use the UP or DOWN keys to highlight the desired parameter and press EDIT (Press ).
5. Use the UP or DOWN keys to change the value of the parameter.
6. Press SAVE (Press ) to store the modified value. Press CANCEL (Press ) to keep the previous value. Any modifications that are not saved will not be changed.
7. Choose another parameter or press EXIT/BACK (Press ) to return to the listing of parameter groups. Continue until all the parameters have been configured and then press EXIT/BACK (Press ) to return to the main menu.

NOTE: The current parameter value appears above the highlight parameter. To view the default parameter value, press the UP and DOWN keys simultaneously.

## ACH580 VFD Modes

The VFD has several different modes for configuring, operating, and diagnosing the VFD. The modes are:

1. Standard Display mode — shows drive status information and operates the drive
2. Parameters mode — edits parameter values individually
3. Start-up Assistant mode — guides the start up and configuration
4. Changed Parameters mode — shows all changed parameters
5. Drive Parameter Backup mode — stores or uploads the parameters
6. Clock Set mode — sets the time and date for the drive
7. I/O Settings mode — checks and edits the I/O settings

ACH580 STANDARD DISPLAY MODE

Use the standard display mode to read information on the drive status and operate the drive. To reach the standard display mode, press BACK until the LCD display shows status information as described below. (See Fig. 60.)

The top line of the LCD display shows the basic status information of the drive. The HAND icon indicates that the drive control is local from the control panel. The AUTO icon indicates that the drive is in remote control mode, such as the basic I/O or field bus.

The arrow icon indicates the drive and motor rotation status. A rotating arrow (clockwise or counterclockwise) indicates that the drive is running and at set point and the shaft direction is forward or reverse. A rotating blinking arrow indicates that the drive is running but not at set point. A stationary arrow indicates that the drive is stopped. For the units covered in this manual, the correct display rotation is clockwise.

The upper right corner shows the frequency set point that the drive will maintain.From Home view press “Options” then “Edit Home View” to change the Home layout, the middle of the LCD display can be configured to display 3 parameter values, Graphs or digital indicators. The default display shows (OUTPUT FREQ) in percent speed, (CURRENT) in amperes, and (AI1) in voltage DC.

The bottom corners of the LCD display show the functions currently assigned to the two soft keys. The lower middle displays the current time (if configured to show the time).

The first time the drive is powered up, it is in the OFF mode. To switch to local hand-held control and control the drive using the control panel, press and hold the HAND button. Pressing the HAND button switches the drive to hand control while keeping the drive running. Press the AUTO button to switch to remote input control. To start the drive press the HAND or AUTO buttons, to stop the drive press the OFF button.

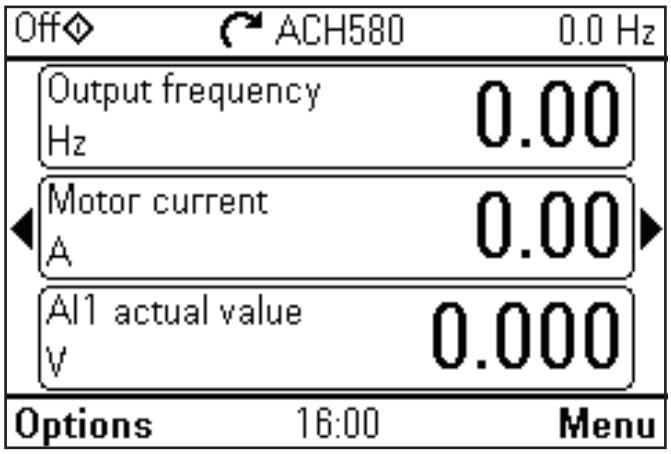


**Fig. 60 — ACH580 Standard Display Example**

The top line of the LCD display shows the basic status information of the drive. The HAND icon indicates that the drive control is local from the control panel. The AUTO icon indicates that the drive is in remote control mode, such as the basic I/O or field bus.

The arrow icon indicates the drive and motor rotation status. A rotating arrow (clockwise or counterclockwise) indicates that the drive is running and at set point and the shaft direction is forward or reverse. A rotating blinking arrow indicates that the drive is running but not at set point. A stationary arrow indicates that the drive is stopped. For the units covered in this manual, the correct display rotation is clockwise.

The upper right corner shows the frequency set point that the drive will maintain.

From Home view press “Options” then “Edit Home View” to change the Home layout, the middle of the LCD display can be configured to display 3 parameter values, Graphs or digital indicators. The default display shows (OUTPUT FREQ) in percent speed, (CURRENT) in amperes, and (AI1) in voltage DC.

The bottom corners of the LCD display show the functions currently assigned to the two soft keys. The lower middle displays the current time (if configured to show the time).

The first time the drive is powered up, it is in the OFF mode. To switch to local hand-held control and control the drive using the control panel, press and hold the HAND button. Pressing the HAND button switches the drive to hand control while keeping the drive running. Press the AUTO button to switch to remote input control. To start the drive press the HAND or AUTO buttons, to stop the drive press the OFF button.

To adjust the speed in HAND mode, press the UP or DOWN buttons (the reference changes immediately). The reference can be modified in the local control (HAND) mode, and can be parameterized (using Group 11 reference select) to also allow modification in the remote control mode.

PARAMETERS MODE

The Parameters mode is used to change the parameters on the drive. To change parameters, perform the following procedure:

1. Select MENU (Press ). The Main menu will be displayed.
2. Use the UP or DOWN keys to highlight PARAMETERS on the display screen and press Select (Press ).
3. Use the UP or DOWN keys to highlight the desired parameter group and press Select (Press ).
4. Use the UP or DOWN keys to highlight the desired parameter and press EDIT (Press ).
5. Use the UP or DOWN keys to change the value of the parameter.
6. Press SAVE (Press ) to store the modified value. Press CANCEL (Press ) to keep the previous value. Any modifications that are not saved will not be changed.
7. Choose another parameter or press BACK (Press ) to return to the listing of parameter groups. Continue until all the parameters have been configured and then press EXIT (Press ) to return to the main menu.

CHANGED PARAMETERS MODE

The Changed Parameters mode is used to view and edit recently changed parameters on the drive. To view the changed parameters, perform the following procedure:

1. Select MENU (Press ). The Main menu will be displayed.
2. Use the UP or DOWN keys to highlight PARAMETERS on the display screen and press Select (Press ).
3. Use the UP or DOWN keys to highlight MODIFIED on the display screen and press Select (Press ). A list of the recently changed parameters will be displayed.
4. Use the UP or DOWN keys to highlight the desired parameter group and press EDIT (Press ) to change the parameter if desired.
5. Press BACK (Press ) to exit the Changed Parameters mode.

DRIVE PARAMETER BACKUP MODE

The drive parameter back up mode is used to export the parameters from one drive to another. The parameters can be uploaded from a VFD to the removable control panel. The control panel can then be transferred to another drive and the parameters downloaded into memory.

Depending on the motor and application, there are two options available. The first option is to download all parameters. This copies both application and motor parameters to the drive from the control panel. This is recommended when using the same application for drives of the same size. This can also be used to create a backup of the parameters group for the drive.

The second option downloads only the application parameters to the drive. This is recommended when using the same application for drives of different sizes. Parameters 99.07, 99.06, 99.08, 99.09, 99.10, and group 51 parameters and internal motor parameters are not copied.

***Upload All Parameters***

To upload and store parameters in the control panel from the VFD insert the Keypad into the VFD slot (Fig. 61) and animation will appear loading the VFD configuration.

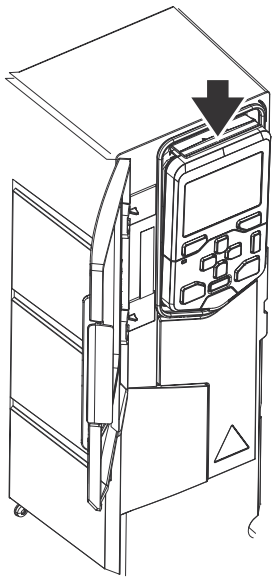

**Fig. 61 — Insert Keypad in Slot**

***Download All Parameters From Backup***

To download all parameters from the control panel to the VFD, perform the following procedure:

1. Install the control panel with the correct parameters onto the VFD.
2. Select MENU (Press ). The Main menu will be displayed.
3. Use the UP or DOWN keys to highlight BACKUPS on the display screen and press SEL (Press ).
4. Use the UP or DOWN keys to highlight the backup file and press SEL (Press ).
5. The text “Restoring Parameters” will be displayed with a progress indicator. To stop the process, select CANCEL (Press ).
6. When the download is complete, the text "Parameter download successful" will be displayed.
7. The display will then return to the PAR BACKUP menu. Select BACK (Press ) to return to the main menu.
8. The control panel can now be disconnected from the drive.

CLOCK SET MODE

Use the clock set mode to set the date and time for the internal clock of the VFD. In order to use the timer functions of the VFD control, the internal clock must be set. The date is used to determine weekdays and is visible in the fault logs.

To set the clock, perform the following procedure:

1. Select MENU (Press ). The Main menu will be displayed.
2. Use the UP or DOWN keys to highlight PRIMARY SETT. on the display screen and press ENTER (Press ). The Sub list will be displayed.
3. Use the UP or DOWN keys to highlight Clock, region, display and press SEL (Press ). This parameter is used to display or hide the clock on the screen. Use the UP or DOWN keys to change the parameter setting. Press OK (Press ) to save the configuration and return to the Sub list menu.
4. Use the UP or DOWN keys to highlight SET TIME and press SEL (Press ). Use the UP or DOWN keys to change the hours and minutes. Press OK (Press ) to save the configuration and return to the Clock Set menu.

5. Use the UP or DOWN keys to highlight TIME FORMAT and press SEL (Press ). Use the UP or DOWN keys to change the parameter setting. Press OK (Press ) to save the configuration and return to the Clock Set menu.
6. Use the UP or DOWN keys to highlight SET DATE and press SEL (Press ). Use the UP or DOWN keys to change the day, month, and year. Press OK (Press ) to save the configuration and return to the Clock Set menu.
7. Use the UP or DOWN keys to highlight DATE FORMAT and press SEL (Press ). Use the UP or DOWN keys to change the parameter setting. Press OK (Press ) to save the configuration and return to the Clock Set menu.
8. Press BACK (Press ). twice to return to the main menu.

I/O SETTINGS MODE

Use the I/O Settings mode to view and edit the I/O settings.

To configure the I/O settings, perform the following procedure:

1. Select MENU (Press ). The Main menu will be displayed.
2. Use the UP or DOWN keys to highlight PRIMARY SETT. on the display screen and press SEL (Press ). The Sub list will be displayed.
3. Use the UP or DOWN keys to highlight ADVANCED OPTIONS/FUNCTIONS. on the display screen and press SEL (Press ) The Sub list will be displayed.
4. Use the UP or DOWN keys to highlight I/O SETTINGS on the display screen and press SEL (Press ). The I/O Settings parameter list will be displayed.
5. Use the UP or DOWN keys to highlight the desired I/O setting and press SEL (Press ).
6. Use the UP or DOWN keys to select the parameter to view. Press OK (Press ).
7. Use the UP or DOWN keys to change the parameter setting. Press SAVE (Press ). to save the configuration. Press CANCEL (SOFT KEY 1) to keep the previous value. Any modifications that are not saved will not be changed.
8. Press BACK (Press ) twice to return to the main menu.

## ACH580 VFD Diagnostics

The drive detects error situations and reports them using:

1. Status LED on the control panel
2. Control panel display
3. The Fault Word and Alarm Word parameter bits

The form of the display depends on the severity of the error. The user can specify the severity for many errors by directing the drive to ignore the error situation, report the situation as an alarm, or report the situation as a fault.

FAULTS (RED LED LIT)

The VFD signals that it has detected a severe error, or fault, by:

1. Enabling the red LED on the drive (LED is either steady or flashing)
2. Setting an appropriate bit in a Fault Word parameter
3. Overriding the control panel display with the display of a fault code
4. Stopping the motor (if it was on)

The fault code on the control panel display is temporary. Pressing the MENU, (Press ). buttons removes the fault message. The message reappears after a few seconds if the control panel is not touched, and the fault is still active. See Table 37 for a list of fault codes.

ALARMS (GREEN LED FLASHING)

For less severe errors, called alarms, the diagnostic display is advisory. For these situations, the drive is simply reporting that it had detected something unusual. In these situations, the drive:

1. Flashes the green LED on the drive (does not apply to alarms that arise from control panel operation errors)
2. Sets an appropriate bit in an Alarm Word parameter
3. Overrides the control panel display with the display of an alarm code and/or name

Alarm messages disappear from the control panel display after a few seconds. The message returns periodically as long as the alarm condition exists. See Table 37 for a list of alarm codes.

CORRECTING FAULTS

The recommended corrective action for faults is shown in Table 37. The VFD can also be reset to remove the fault. If an external source for a start command is selected and is active, the VFD may start immediately after fault reset.

To reset a fault indicated by a flashing red LED, turn off the power for 5 minutes. To reset a fault indicated by a red LED (not flashing), press RESET from the control panel or turn off the power for 5 minutes. Depending on the value of parameter, digital input or serial communication could also be used to reset the drive. When the fault has been corrected, the motor can be started.

CORRECTING ALARMS

To correct alarms, first determine if the alarm requires any corrective action (action is not always required). Use Table 37 to find and address the root cause of the problem.

If diagnostics troubleshooting has determined that the drive is defective during the warranty period, contact Carrier.

## Table 37 — Fault and Alarm Codes for ACH580 VFD

| CODE (HEX) | WARNING / AUX. CODE | CAUSE | WHAT TO DO |
|---|---|---|---|
| **A2B1** | Overcurrent | Output current has exceeded internal fault limit.<br>In addition to an actual overcurrent situation, this warning may also be caused by an earth fault or supply phase loss. | Check motor load.<br>Check acceleration times in parameter group 23 Speed reference ramp (speed control) or 28 Frequency reference chain (frequency control). Also check parameters 46.01 Speed scaling, 46.02 Frequency scaling and 46.03 Torque scaling.<br>Check motor and motor cable (including phasing and delta/star connection). Check for an earth fault in motor or motor cables by measuring the insulation resistances of motor and motor cable. See chapter Electrical installation, section Checking the insulation of the assembly in the Hardware manual of the drive.<br>Check there are no contactors opening and closing in motor cable.<br>Check that the start-up data in parameter group 99 Motor data corresponds to the motor rating plate.<br>Check that there are no power factor correction capacitors or surge absorbers in motor cable. |
| **A2B3** | Earth leakage | Drive has detected load unbalance typically due to earth fault in motor or motor cable. | Check there are no power factor correction capacitors or surge absorbers in motor cable.<br>Check for an earth fault in motor or motor cables by measuring the insulation resistances of motor and motor cable. See chapter Electrical installation, section Checking the insulation of the assembly in the Hardware manual of the drive. If an earth fault is found, fix or change the motor cable and/or motor. If no earth fault can be detected, contact your local Carrier representative. |
| **A2B4** | Short circuit | Short-circuit in motor cable(s) or motor. | Check motor and motor cable for cabling errors.<br>Check motor and motor cable (including phasing and delta/star connection). Check for an earth fault in motor or motor cables by measuring the insulation resistances of motor and motor cable. See chapter Electrical installation, section Checking the insulation of the assembly in the Hardware manual of the drive.<br>Check there are no power factor correction capacitors or surge absorbers in motor cable. |
| **A6A4** | Motor nominal value | The motor parameters are set incorrectly. | Check the auxiliary code. See actions for each code below. |
| **A6A4** | Motor nominal value 0001 | The drive is not dimensioned correctly. | Check the auxiliary code. See actions for each code below.<br>Check the settings of the motor configuration parameters in groups 98 and 99.<br>Check that the drive is sized correctly for the motor. |
| **A780** | Motor stall Programmable warning: 31.24 Stall function | Motor is operating in stall region because of, for example, excessive load or insufficient motor power. | Check motor load and drive ratings. Check fault function parameters. |
| **A783** | Motor overload | Motor current is too high. | Check for overloaded motor.<br>Adjust the parameters used for the motor overload function (35.51...35.53) and 35.55...35.56. |
| **A784** | Motor disconnect | All three output phases are disconnected from motor. | Check that switches between drive and motor are closed.<br>Check that all cables between drive and motor are connected and secured. If no issue was detected and drive output was actually connected to motor, contact Carrier. |
| **A7AB** | Extension I/O configuration failure | Installed extension module is not the same as configured. | Check that the installed extension module (shown by parameter 15.02 Detected extension module) is the same as selected by parameter 15.01 Extension module type. |
| **A7C1** | FBA A communication Programmable warning: 50.02 FBA A comm loss func | Cyclical communication between drive and fieldbus adapter module A or between PLC and fieldbus adapter module A is lost. | Check status of fieldbus communication. See user documentation of fieldbus interface.<br>Check settings of parameter groups 50 Fieldbus adapter (FBA), 51 FBA A settings, 52 FBA A data in and 53 FBA A data out.<br>Check cable connections.<br>Check if communication master is able to communicate. |
| **A7CE** | EFB comm loss Programmable warning: 58.14 Communication loss action | Communication break in embedded fieldbus (EFB) communication. | Check the status of the fieldbus master (online/offline/error etc.).<br>Check cable connections to the EIA-485/X5 terminals 29, 30 and 31 on the control unit. |
| **A7EE** | Panel loss Programmable warning: 49.05 Communication loss action | Control panel or PC tool selected as active control location for drive has ceased communicating. | Check PC tool or control panelcconnection.<br>Check control panel connector.<br>Check mounting platform if being used. Disconnect and reconnect the control panel. |
| **A88F** | Cooling fan | Maintenance timer limit exceeded. | Consider changing the cooling fan. Parameter 05.04 Fan on-time counter shows the running time of the cooling fan. |
| **AFAA** | Auto reset | A fault is about to be auto reset. | Informative warning. See the settings in parameter group 31 Fault functions. |
| **AFE1** | Emergency stop (off2) | Drive has received an emergency stop (mode selection off2) command. | Check that it is safe to continue operation. Then return emergency stop push button to normal position. Restart drive.<br>If the emergency stop was unintentional, check the source selected by parameter 21.05 Emergency stop source. |
| **AFE2** | Emergency stop (off 1 or off3) | Drive has received an emergency stop (mode selection off1 or off3) command. | Check that it is safe to continue operation. Then return emergency stop push button to normal position. Restart drive.<br>If the emergency stop was unintentional, check the source selected by parameter 21.05 Emergency stop source.<br>Informative warning. See parameter 21.22 Start delay. |

## Table 37 — Fault and Alarm Codes for ACH580 VFD (cont)

| CODE (HEX) | WARNING / AUX. CODE | CAUSE | WHAT TO DO |
|---|---|---|---|
| **AFE9** | Start delay | The start delay is active and the drive will start the motor after a predefined delay. | Check that it is safe to continue operation. Then return emergency stop push button to normal position. Restart drive. If the emergency stop was unintentional, check the source selected by parameter 21.05 Emergency stop source. Informative warning. See parameter 21.22 Start delay. Check the setting of (and source selected by) parameter 20.40 Run permissive. |
| **AFED** | Run permissive | Run permissive is keeping the drive from running the motor. | |
| **AFEE** | Start interlock 1 | Start interlock 1 is keeping the drive from starting. | Check the signal source selected for parameter 20.41 Start interlock 1. |
| **AFEF** | Start interlock 2 | Start interlock 2 is keeping the drive from starting. | Check the signal source selected for parameter 20.42 Start interlock 2. |
| **AFF0** | Start interlock 3 | Start interlock 3 is keeping the drive from starting. | Check the signal source selected for parameter 20.43 Start interlock 3. |
| **AFF1** | Start interlock 4 | Start interlock 4 is keeping the drive from starting. | Check the signal source selected for parameter 20.44 Start interlock 4. |
| **AFF2** | Run permissive forced warning | A forced DI is used as a source for parameter 20.40 Run permissive. | If 20.40 Run permissive uses DIx as the source, check if the bit corresponding to DIx in parameter 10.03 DI force selection is 1. |
| **AFF3** | Start interlock forced warning | One or more forced DIs is used as a source for one or more of parameters 20.41 Start interlock 1 ... 20.44 Start interlock 4. | Check all parameters 20.41 Start interlock 1 ... 20.44 Start interlock 4. If any of these parameters uses DIx as the source, check if the bit corresponding to DIx in parameter 10.03 DI force selection is 1. |
| **AFF5** | Override new start required | The Safe torque off function was active and has been reset while in Override. | A new start signal is required to start the drive again. |
| **AFF6** | Identification run | Motor ID run will occur at next start. | Informative warning. |
| **AFF8** | Motor heating active | Pre-heating is being performed | Informative warning.<br>Motor pre-heating is active. Current specified by parameter 21.16 Preheating current is being passed through the motor. |
| **AFFE** | Override active | Drive is in Override mode. | Informative warning. |
| **B5A2** | Power applied | The drive was powered up or the control board was rebooted successfully. | Informative event. |
| **B681** | Hand mode selected | The drive was placed in Hand mode. | Informative event. Check the control panel to ensure that the current control location is correct. |
| **B682** | Off mode selected | The drive was placed in Off mode. | Informative event. Check the control panel to ensure that the current control location is correct. |
| **B683** | Auto mode selected | The drive was placed in Auto mode. | Informative event. Check the control panel to ensure that the current control location is correct. |
| **2310** | Overcurrent | Output current has exceeded internal fault limit.<br>In addition to an actual overcurrent situation, this fault may also be caused by an earth fault or supply phase loss. | Check motor load.<br>Check acceleration times in parameter group 23 Speed reference ramp (speed control) or 28 Frequency reference chain (frequency control). Also check parameters 46.01 Speed scaling, 46.02 Frequency scaling and 46.03 Torque scaling.<br>Check motor and motor cable (including phasing and delta/star connection). Check there are no contactors opening and closing in motor cable.<br>Check that the start-up data in parameter group 99 corresponds to the motor rating plate.<br>Check that there are no power factor correction capacitors or surge absorbers in motor cable.<br>Check for an earth fault in motor or motor cables by measuring the insulation resistances of motor and motor cable. See chapter Electrical installation, section Checking the insulation of the assembly in the Hardware manual of the drive. |
| **FF61** | ID run | Motor ID run was not completed successfully. | Check safety circuit connections. For more information, see chapter The Safe torque off function in the Hardware manual of the drive and description of parameter 31.22 STO indication run/stop(page 520).<br>Check the value of parameter 95.04 Control board supply.<br>Check the nominal motor values in parameter group 99 Motor data. Check that no external control system is connected to the drive.<br>Cycle the power to the drive (and its control unit, if powered separately). Check that no operation limits prevent the completion of the ID run. Restore parameters to default settings and try again.<br>Check that the motor shaft is not locked. Check the auxiliary code. See actions for each code below. |

## ALL ACH580 ACH550 AND ACH320 KEYPADS

### Control Panel Cleaning

Use a soft damp cloth to clean the control panel. Avoid harsh cleaners which could scratch the display window.

### Battery Replacement

A battery is only used in assistant control panels that have the clock function available and enabled. The battery keeps the clock operating in memory during power interruptions. The expected life for the battery is greater than ten years. To remove the battery, use a coin to rotate the battery holder on the back of the control panel. Replace the battery with type CR2032.

## VFD Remote Keypad Parameters

### Table 38 — ACH550/580VFD Parameters — 48/50TC 07-14, 50TCQ 07-12, 48/50HC 07-12 and 50HCQ 08-09

| VFD Part Number | ACH550 Replacement Component Part Number | ACH580 Replacement Component Part Number | Description | Motor Part Number | Voltage 9905 99.07 | Nom Amps 9906 99.06 | Motor Nom Freq 9907 99.08 | Nom RPM 9908 99.09 | Nom HP 9909 99.10 | Const Speed Sel 1201 22.22 | Const Speed 1 1202 28.26 | Const Speed 2 1203 28.27 | Const Speed 3 1204 28.28 |
|---|---|---|---|---|---|---|---|---|---|---|---|---|---|
| **HK30WA364** | HK30WA302 | HK30WB358 | 1.7 HP 230V | HD56FR233 | 230 | 5.8 | 60Hz | 1725 | 1.7 | DI 2,3 | 40Hz | 60Hz | 60Hz |
| **HK30WA356** | HK30WA318 | HK30WB364 | 1.7 HP 460V | HD56FR463 | 460 | 2.9 | 60Hz | 1725 | 1.7 | DI 2,3 | 40Hz | 60Hz | 60Hz |
| **HK30WA366** | HK30WA332 | HK30WB368 | 1.7 HP 575V | HD56FR579 | 575 | 3.1 | 60Hz | 1725 | 1.7 | DI 2,3 | 40Hz | 60Hz | 60Hz |
| **HK30WA352** | HK30WA303 | HK30WB359 | 2.4 HP 230V | HD56FE653 | 230 | 7.9 | 60Hz | 1725 | 2.4 | DI 2,3 | 40Hz | 60Hz | 60Hz |
| **HK30WA356** | HK30WA318 | HK30WB364 | 2.4 HP 460V | HD56FE653 | 460 | 4 | 60Hz | 1725 | 2.4 | DI 2,3 | 40Hz | 60Hz | 60Hz |
| **HK30WA360** | HK30WA333 | HK30WB369 | 2.4 HP 575V | HD56FE577 | 575 | 3.4 | 60Hz | 1725 | 2.4 | DI 2,3 | 40Hz | 60Hz | 60Hz |
| **HK30WA352** | HK30WA303 | HK30WB359 | 2.9 HP 230V | HD58FE654 | 230 | 9.2 | 60Hz | 1725 | 2.9 | DI 2,3 | 40Hz | 60Hz | 60Hz |
| **HK30WA356** | HK30WA318 | HK30WB364 | 2.9 HP 460V | HD58FE654 | 460 | 4.6 | 60Hz | 1725 | 2.9 | DI 2,3 | 40Hz | 60Hz | 60Hz |
| **HK30WA353** | HK30WA304 | HK30WB360 | 3.7 HP 230V | HD60FE656 | 230 | 11.2 | 60Hz | 1725 | 3.7 | DI 2,3 | 40Hz | 60Hz | 60Hz |
| **HK30WA357** | HK30WA319 | HK30WB365 | 3.7 HP 460V | HD60FE656 | 460 | 5.6 | 60Hz | 1725 | 3.7 | DI 2,3 | 40Hz | 60Hz | 60Hz |
| **HK30WA361** | HK30WA334 | HK30WB370 | 3.7 HP 575V | HD58FE577 | 575 | 4.2 | 60Hz | 1725 | 3.7 | DI 2,3 | 40Hz | 60Hz | 60Hz |
| **HK30WA354** | HK30WA305 | HK30WB361 | 5.3 HP 230V | HD60FK658 | 230 | 13 | 60Hz | 1740 | 5.3 | DI 2,3 | 40Hz | 60Hz | 60Hz |
| **HK30WA358** | HK30WA320 | HK30WB366 | 5.3 HP 460V | HD60FK658 | 460 | 6.4 | 60Hz | 1740 | 5.3 | DI 2,3 | 40Hz | 60Hz | 60Hz |
| **HK30WA362** | HK30WA335 | HK30WB371 | 5.3 HP 575V | HD60FE576 | 575 | 5.4 | 60Hz | 1725 | 5.3 | DI 2,3 | 40Hz | 60Hz | 60Hz |

### Table 38 — ACH550/580VFD Parameters — 48/50TC 07-14, 50TCQ 07-12, 48/50HC 07-12 and 50HCQ 08-09 (cont)

| VFD Part Number | ACH550 Replacement Component Part Number | ACH580 Replacement Component Part Number | Description | Relay Out 3 1403 10.3 | Max Amps 2003 30.17 | Min Freq 2007 30.13 | Max Freq 2008 30.14 | Switch Freq 2606 97.01 | Start Fcn 2101 21.19 | Stop Fcn 2102 21.03 | Accel/ Decel 2201 21.19 | Accel 2202 28.72 | Decel 2203 28.73 |
|---|---|---|---|---|---|---|---|---|---|---|---|---|---|
| **HK30WA364** | HK30WA302 | HK30WB358 | 1.7 HP 230V | FLT/ (14) Fault | 6.7 | 0Hz | 60Hz | 4kHz | Auto Automatic | Ramp | Not Sel / 0 | 30 sec | 30 sec |
| **HK30WA356** | HK30WA318 | HK30WB364 | 1.7 HP 460V | FLT/ (14) Fault | 3.3 | 0Hz | 60Hz | 4kHz | Auto Automatic | Ramp | Not Sel / 0 | 30 sec | 30 sec |
| **HK30WA366** | HK30WA332 | HK30WB368 | 1.7 HP 575V | FLT/ (14) Fault | 3.6 | 0Hz | 60Hz | 4kHz | Auto Automatic | Ramp | Not Sel / 0 | 30 sec | 30 sec |
| **HK30WA352** | HK30WA303 | HK30WB359 | 2.4 HP 230V | FLT/ (14) Fault | 9.1 | 0Hz | 60Hz | 4kHz | Auto Automatic | Ramp | Not Sel / 0 | 30 sec | 30 sec |
| **HK30WA356** | HK30WA318 | HK30WB364 | 2.4 HP 460V | FLT/ (14) Fault | 4.6 | 0Hz | 60Hz | 4kHz | Auto Automatic | Ramp | Not Sel / 0 | 30 sec | 30 sec |
| **HK30WA360** | HK30WA333 | HK30WB369 | 2.4 HP 575V | FLT/ (14) Fault | 3.9 | 0Hz | 60Hz | 4kHz | Auto Automatic | Ramp | Not Sel / 0 | 30 sec | 30 sec |
| **HK30WA352** | HK30WA303 | HK30WB359 | 2.9 HP 230V | FLT/ (14) Fault | 10.6 | 0Hz | 60Hz | 4kHz | Auto Automatic | Ramp | Not Sel / 0 | 30 sec | 30 sec |
| **HK30WA356** | HK30WA318 | HK30WB364 | 2.9 HP 460V | FLT/ (14) Fault | 5.3 | 0Hz | 60Hz | 4kHz | Auto Automatic | Ramp | Not Sel / 0 | 30 sec | 30 sec |
| **HK30WA353** | HK30WA304 | HK30WB360 | 3.7 HP 230V | FLT/ (14) Fault | 12.9 | 0Hz | 60Hz | 4kHz | Auto Automatic | Ramp | Not Sel / 0 | 30 sec | 30 sec |
| **HK30WA357** | HK30WA319 | HK30WB365 | 3.7 HP 460V | FLT/ (14) Fault | 6.4 | 0Hz | 60Hz | 4kHz | Auto Automatic | Ramp | Not Sel / 0 | 30 sec | 30 sec |
| **HK30WA361** | HK30WA334 | HK30WB370 | 3.7 HP 575V | FLT/ (14) Fault | 4.8 | 0Hz | 60Hz | 4kHz | Auto Automatic | Ramp | Not Sel / 0 | 30 sec | 30 sec |
| **HK30WA354** | HK30WA305 | HK30WB361 | 5.3 HP 230V | FLT/ (14) Fault | 15.0 | 0Hz | 60Hz | 4kHz | Auto Automatic | Ramp | Not Sel / 0 | 30 sec | 30 sec |
| **HK30WA358** | HK30WA320 | HK30WB366 | 5.3 HP 460V | FLT/ (14) Fault | 7.4 | 0Hz | 60Hz | 4kHz | Auto Automatic | Ramp | Not Sel / 0 | 30 sec | 30 sec |
| **HK30WA362** | HK30WA335 | HK30WB371 | 5.3 HP 575V | FLT/ (14) Fault | 6.2 | 0Hz | 60Hz | 4kHz | Auto Automatic | Ramp | Not Sel / 0 | 30 sec | 30 sec |

## Table 39 — ACH550/580 VFD Parameters — 48/50TC 16, 50TCQ 14, 48/50HC 14 and 50HCQ 12

| VFD Part Number | ACH550 Replacement Component Part Number | ACH580 Replacement Component Part Number | Description | Motor Part Number | Voltage 9905 99.07 | Nom Amps 9906 99.06 | Motor Nom Freq 9907 99.08 | Nom RPM 9908 99.09 | Nom HP 9909 99.10 | Const Speed Sel 1201 22.22 | Const Speed 1 1202 28.26 | Const Speed 2 1203 28.27 | Const Speed 3 1204 28.28 |
|---|---|---|---|---|---|---|---|---|---|---|---|---|---|
| **HK30WA352** | HK30WA303 | HK30WB359 | 2.4 HP 230V | HD56FE653 | 230 | 7.9 | 60Hz | 1725 | 2.4 | DI 2,3 | 40Hz | 60Hz | 60Hz |
| **HK30WA356** | HK30WA318 | HK30WB364 | 2.4 HP 460V | HD56FE653 | 460 | 4 | 60Hz | 1725 | 2.4 | DI 2,3 | 40Hz | 60Hz | 60Hz |
| **HK30WA360** | HK30WA333 | HK30WB369 | 2.4 HP 575V | HD56FE577 | 575 | 3.4 | 60Hz | 1725 | 2.4 | DI 2,3 | 40Hz | 60Hz | 60Hz |
| **HK30WA352** | HK30WA303 | HK30WB359 | 2.9 HP 230V | HD58FE654 | 230 | 9.2 | 60Hz | 1725 | 2.9 | DI 2,3 | 40Hz | 60Hz | 60Hz |
| **HK30WA356** | HK30WA318 | HK30WB364 | 2.9 HP 460V | HD58FE654 | 460 | 4.6 | 60Hz | 1725 | 2.9 | DI 2,3 | 40Hz | 60Hz | 60Hz |
| **HK30WA353** | HK30WA304 | HK30WB360 | 3.7 HP 230V | HD60FE656 | 230 | 11.2 | 60Hz | 1725 | 3.7 | DI 2,3 | 40Hz | 60Hz | 60Hz |
| **HK30WA357** | HK30WA319 | HK30WB365 | 3.7 HP 460V | HD60FE656 | 460 | 5.6 | 60Hz | 1725 | 3.7 | DI 2,3 | 40Hz | 60Hz | 60Hz |
| **HK30WA361** | HK30WA334 | HK30WB370 | 3.7 HP 575V | HD58FE577 | 575 | 4.2 | 60Hz | 1725 | 3.7 | DI 2,3 | 40Hz | 60Hz | 60Hz |
| **HK30WA354** | HK30WA305 | HK30WB361 | 5.0 HP 230V | HD60FL657 | 230 | 16.7 | 60Hz | 1745 | 5 | DI 2,3 | 40Hz | 60Hz | 60Hz |
| **HK30WA358** | HK30WA320 | HK30WB366 | 5.0 HP 460V | HD60FL657 | 460 | 8.4 | 60Hz | 1745 | 5 | DI 2,3 | 40Hz | 60Hz | 60Hz |
| **HK30WA362** | HK30WA335 | HK30WB371 | 5.0 HP 575V | HD60FL575 | 575 | 5.1 | 60Hz | 1725 | 5 | DI 2,3 | 40Hz | 60Hz | 60Hz |
| **HK30WA354** | HK30WA305 | HK30WB361 | 5.0 HP 230V | HD60FK657 | 230 | 14.7 | 60Hz | 1760 | 5 | DI 2,3 | 40Hz | 60Hz | 60Hz |
| **HK30WA358** | HK30WA320 | HK30WB366 | 5.0 HP 460V | HD60FK657 | 460 | 6.8 | 60Hz | 1760 | 5 | DI 2,3 | 40Hz | 60Hz | 60Hz |
| **HK30WA362** | HK30WA335 | HK30WB371 | 5.0 HP 575V | HD60FL576 | 575 | 5.4 | 60Hz | 1745 | 5 | DI 2,3 | 40Hz | 60Hz | 60Hz |

## Table 39 — ACH550/580 VFD Parameters — 48/50TC 16, 50TCQ 14, 48/50HC 14 and 50HCQ 12 (cont)

| VFD Part Number | ACH550 Replacement Component Part Number | ACH580 Replacement Component Part Number | Description | Relay Out 3 1403 10.3 | Max Amps 2003 30.17 | Min Freq 2007 30.13 | Max Freq 2008 30.14 | Switch Freq 2606 97.01 | Start Fcn 2101 21.19 | Stop Fcn 2102 21.03 | Accel/ Decel 2201 21.19 | Accel 2202 28.72 | Decel 2203 28.73 |
|---|---|---|---|---|---|---|---|---|---|---|---|---|---|
| **HK30WA352** | HK30WA303 | HK30WB359 | 2.4 HP 230V | FLT/ 14 Fault | 3.9 | 0Hz | 60Hz | 4kHz | Auto Automatic | Ramp | Not Sel / 0 | 30 sec | 30 sec |
| **HK30WA356** | HK30WA318 | HK30WB364 | 2.4 HP 460V | FLT/ 14 Fault | 10.6 | 0Hz | 60Hz | 4kHz | Auto Automatic | Ramp | Not Sel / 0 | 30 sec | 30 sec |
| **HK30WA360** | HK30WA333 | HK30WB369 | 2.4 HP 575V | FLT/ 14 Fault | 5.3 | 0Hz | 60Hz | 4kHz | Auto Automatic | Ramp | Not Sel / 0 | 30 sec | 30 sec |
| **HK30WA352** | HK30WA303 | HK30WB359 | 2.9 HP 230V | FLT/ 14 Fault | 12.9 | 0Hz | 60Hz | 4kHz | Auto Automatic | Ramp | Not Sel / 0 | 30 sec | 30 sec |
| **HK30WA356** | HK30WA318 | HK30WB364 | 2.9 HP 460V | FLT/ 14 Fault | 6.4 | 0Hz | 60Hz | 4kHz | Auto Automatic | Ramp | Not Sel / 0 | 30 sec | 30 sec |
| **HK30WA353** | HK30WA304 | HK30WB360 | 3.7 HP 230V | FLT/ 14 Fault | 4.8 | 0Hz | 60Hz | 4kHz | Auto Automatic | Ramp | Not Sel / 0 | 30 sec | 30 sec |
| **HK30WA357** | HK30WA319 | HK30WB365 | 3.7 HP 460V | FLT/ 14 Fault | 19.2 | 0Hz | 60Hz | 4kHz | Auto Automatic | Ramp | Not Sel / 0 | 30 sec | 30 sec |
| **HK30WA361** | HK30WA334 | HK30WB370 | 3.7 HP 575V | FLT/ 14 Fault | 9.7 | 0Hz | 60Hz | 4kHz | Auto Automatic | Ramp | Not Sel / 0 | 30 sec | 30 sec |
| **HK30WA354** | HK30WA305 | HK30WB361 | 5.0 HP 230V | FLT/ 14 Fault | 5.9 | 0Hz | 60Hz | 4kHz | Auto Automatic | Ramp | Not Sel / 0 | 30 sec | 30 sec |
| **HK30WA358** | HK30WA320 | HK30WB366 | 5.0 HP 460V | FLT/ 14 Fault | 16.9 | 0Hz | 60Hz | 4kHz | Auto Automatic | Ramp | Not Sel / 0 | 30 sec | 30 sec |
| **HK30WA362** | HK30WA335 | HK30WB371 | 5.0 HP 575V | FLT/ 14 Fault | 7.8 | 0Hz | 60Hz | 4kHz | Auto Automatic | Ramp | Not Sel / 0 | 30 sec | 30 sec |
| **HK30WA354** | HK30WA305 | HK30WB361 | 5.0 HP 230V | FLT/ 14 Fault | 6.2 | 0Hz | 60Hz | 4kHz | Auto Automatic | Ramp | Not Sel / 0 | 30 sec | 30 sec |
| **HK30WA358** | HK30WA320 | HK30WB366 | 5.0 HP 460V | FLT/ 14 Fault | 3.9 | 0Hz | 60Hz | 4kHz | Auto Automatic | Ramp | Not Sel / 0 | 30 sec | 30 sec |
| **HK30WA362** | HK30WA335 | HK30WB371 | 5.0 HP 575V | FLT/ 14 Fault | 10.6 | 0Hz | 60Hz | 4kHz | Auto Automatic | Ramp | Not Sel / 0 | 30 sec | 30 sec |

## Table 40 — ACH550/580 VFD Parameters — 48/50TC17-30, 50TCQ 17-24 and 48/50HC 17-28

| VFD Part Number | ACH550 Replacement Component Part Number | ACH580 Replacement Component Part Number | Description | Motor Part Number | Voltage 9905 99.07 | Nom Amps 9906 99.06 | Motor Nom Freq 9907 99.08 | Nom RPM 9908 99.09 | Nom HP 9909 99.10 | Const Speed Sel 1201 22.22 | Const Speed 1 1202 28.26 | Const Speed 2 1203 28.27 | Const Speed 3 1204 28.28 |
|---|---|---|---|---|---|---|---|---|---|---|---|---|---|
| **HK30WA352** | HK30WA303 | HK30WB304 | 2.9 HP 230V | HD58FE654 | 230 | 9.2 | 60Hz | 1725 | 2.9 | DI 2,3 | 40Hz | 60Hz | 60Hz |
| **HK30WA356** | HK30WA318 | HK30WB320 | 2.9 HP 460V | HD58FE654 | 460 | 4.6 | 60Hz | 1725 | 2.9 | DI 2,3 | 40Hz | 60Hz | 60Hz |
| **HK30WA353** | HK30WA304 | HK30WB305 | 3.7 HP 230V | HD60FE656 | 230 | 11.2 | 60Hz | 1725 | 3.7 | DI 2,3 | 40Hz | 60Hz | 60Hz |
| **HK30WA357** | HK30WA319 | HK30WB321 | 3.7 HP 460V | HD60FE656 | 460 | 5.6 | 60Hz | 1725 | 3.7 | DI 2,3 | 40Hz | 60Hz | 60Hz |
| **HK30WA361** | HK30WA334 | HK30WB341 | 3.7 HP 575V | HD58FE577 | 575 | 4.2 | 60Hz | 1725 | 3.7 | DI 2,3 | 40Hz | 60Hz | 60Hz |
| **HK30WA354** | HK30WA305 | HK30WB306 | 5.0 HP 230V | HD60FK657 | 230 | 14.7 | 60Hz | 1760 | 5 | DI 2,3 | 40Hz | 60Hz | 60Hz |
| **HK30WA358** | HK30WA320 | HK30WB322 | 5.0 HP 460V | HD60FK657 | 460 | 6.8 | 60Hz | 1760 | 5 | DI 2,3 | 40Hz | 60Hz | 60Hz |
| **HK30WA362** | HK30WA335 | HK30WB342 | 5.0 HP 575V | HD60FL576 | 575 | 5.4 | 60Hz | 1745 | 5 | DI 2,3 | 40Hz | 60Hz | 60Hz |
| **HK30WA354** | HK30WA305 | HK30WB306 | 7.5 HP 230V | HD62FK654 | 230 | 23.5 | 60Hz | 1760 | 7.5 | DI 2,3 | 40Hz | 60Hz | 60Hz |
| **HK30WA358** | HK30WA320 | HK30WB322 | 7.5 HP 460V | HD62FK654 | 460 | 11.9 | 60Hz | 1760 | 7.5 | DI 2,3 | 40Hz | 60Hz | 60Hz |
| **HK30WA362** | HK30WA335 | HK30WB342 | 7.5 HP 575V | HD62FL576 | 575 | 9 | 60Hz | 1750 | 7.5 | DI 2,3 | 40Hz | 60Hz | 60Hz |
| **HK30WA354** | HK30WA305 | HK30WB306 | 5.0 HP 230V | HD60FL650 | 230 | 16.7 | 60Hz | 1740 | 5 | DI 2,3 | 40Hz | 60Hz | 60Hz |
| **HK30WA358** | HK30WA320 | HK30WB322 | 5.0 HP 460V | HD60FL650 | 460 | 8.4 | 60Hz | 1740 | 5 | DI 2,3 | 40Hz | 60Hz | 60Hz |
| **HK30WA362** | HK30WA335 | HK30WB342 | 5.0 HP 575V | HD60FL575 | 575 | 5.1 | 60Hz | 1725 | 5 | DI 2,3 | 40Hz | 60Hz | 60Hz |
| **HK30WA354** | HK30WA305 | HK30WB306 | 5.3 HP 230V | HD60FK658 | 230 | 13 | 60Hz | 1740 | 5.3 | DI 2,3 | 40Hz | 60Hz | 60Hz |
| **HK30WA358** | HK30WA320 | HK30WB322 | 5.3 HP 460V | HD60FK658 | 460 | 6.4 | 60Hz | 1740 | 5.3 | DI 2,3 | 40Hz | 60Hz | 60Hz |
| **HK30WA362** | HK30WA335 | HK30WB342 | 5.3 HP 575V | HD60FE576 | 575 | 5.4 | 60Hz | 1725 | 5.3 | DI 2,3 | 40Hz | 60Hz | 60Hz |
| **HK30WA354** | HK30WA305 | HK30WB306 | 7.5 HP 230V | HD62FL650 | 230 | 22.9 | 60Hz | 1745 | 7.5 | DI 2,3 | 40Hz | 60Hz | 60Hz |
| **HK30WA358** | HK30WA320 | HK30WB322 | 7.5 HP 460V | HD62FL650 | 460 | 11.5 | 60Hz | 1745 | 7.5 | DI 2,3 | 40Hz | 60Hz | 60Hz |
| **HK30WA362** | HK30WA335 | HK30WB342 | 7.5 HP 575V | HD62FL575 | 575 | 8.1 | 60Hz | 1745 | 7.5 | DI 2,3 | 40Hz | 60Hz | 60Hz |
| **HK30WA355** | HK30WA306 | HK30WB307 | 10.0 HP 230V | HD64FK654 | 230 | 28 | 60Hz | 1755 | 10 | DI 2,3 | 40Hz | 60Hz | 60Hz |
| **HK30WA359** | HK30WA321 | HK30WB323 | 10.0 HP 460V | HD64FK654 | 460 | 12.6 | 60Hz | 1755 | 10 | DI 2,3 | 40Hz | 60Hz | 60Hz |
| **HK30WA363** | HK30WA336 | HK30WB343 | 10.0 HP 575V | HD64FL576 | 575 | 11 | 60Hz | 1755 | 10 | DI 2,3 | 40Hz | 60Hz | 60Hz |
| **HK30WA355** | HK30WA306 | HK30WB307 | 10.0 HP 230V | HD64FL650 | 230 | 30.8 | 60Hz | 1745 | 10 | DI 2,3 | 40Hz | 60Hz | 60Hz |
| **HK30WA359** | HK30WA321 | HK30WB323 | 10.0 HP 460V | HD64FL650 | 460 | 15.4 | 60Hz | 1745 | 10 | DI 2,3 | 40Hz | 60Hz | 60Hz |
| **HK30WA363** | HK30WA336 | HK30WB343 | 10.0 HP 575V | HD64FL575 | 575 | 11 | 60Hz | 1740 | 10 | DI 2,3 | 40Hz | 60Hz | 60Hz |

## Table 40 — ACH550/580 VFD Parameters — 48/50TC17-30, 50TCQ 17-24 and 48/50HC 17-28 (cont)

| VFD Part Number | ACH550 Replacement Component Part Number | ACH580 Replacement Component Part Number | Description | Relay Out 3 1403 10.3 | Max Amps 2003 30.17 | Min Freq 2007 30.13 | Max Freq 2008 30.14 | Switch Freq 2606 97.01 | Start Fcn 2101 21.19 | Stop Fcn 2102 21.03 | Accel/ Decel 2201 21.19 | Accel 2202 28.72 | Decel 2203 28.73 |
|---|---|---|---|---|---|---|---|---|---|---|---|---|---|
| **HK30WA352** | HK30WA303 | HK30WB304 | 2.9 HP 230V | FLT/ (14) Fault | 10.6 | 0Hz | 60Hz | 4kHz | Auto Automatic | Ramp | Not Sel / 0 | 30 sec | 30 sec |
| **HK30WA356** | HK30WA318 | HK30WB320 | 2.9 HP 460V | FLT/ (14) Fault | 5.3 | 0Hz | 60Hz | 4kHz | Auto Automatic | Ramp | Not Sel / 0 | 30 sec | 30 sec |
| **HK30WA353** | HK30WA304 | HK30WB305 | 3.7 HP 230V | FLT/ (14) Fault | 12.9 | 0Hz | 60Hz | 4kHz | Auto Automatic | Ramp | Not Sel / 0 | 30 sec | 30 sec |
| **HK30WA357** | HK30WA319 | HK30WB321 | 3.7 HP 460V | FLT/ (14) Fault | 6.4 | 0Hz | 60Hz | 4kHz | Auto Automatic | Ramp | Not Sel / 0 | 30 sec | 30 sec |
| **HK30WA361** | HK30WA334 | HK30WB341 | 3.7 HP 575V | FLT/ (14) Fault | 4.8 | 0Hz | 60Hz | 4kHz | Auto Automatic | Ramp | Not Sel / 0 | 30 sec | 30 sec |
| **HK30WA354** | HK30WA305 | HK30WB306 | 5.0 HP 230V | FLT/ (14) Fault | 16.9 | 0Hz | 60Hz | 4kHz | Auto Automatic | Ramp | Not Sel / 0 | 30 sec | 30 sec |
| **HK30WA358** | HK30WA320 | HK30WB322 | 5.0 HP 460V | FLT/ (14) Fault | 7.8 | 0Hz | 60Hz | 4kHz | Auto Automatic | Ramp | Not Sel / 0 | 30 sec | 30 sec |
| **HK30WA362** | HK30WA335 | HK30WB342 | 5.0 HP 575V | FLT/ (14) Fault | 6.2 | 0Hz | 60Hz | 4kHz | Auto Automatic | Ramp | Not Sel / 0 | 30 sec | 30 sec |
| **HK30WA354** | HK30WA305 | HK30WB306 | 7.5 HP 230V | FLT/ (14) Fault | 27 | 0Hz | 60Hz | 4kHz | Auto Automatic | Ramp | Not Sel / 0 | 30 sec | 30 sec |
| **HK30WA358** | HK30WA320 | HK30WB322 | 7.5 HP 460V | FLT/ (14) Fault | 13.7 | 0Hz | 60Hz | 4kHz | Auto Automatic | Ramp | Not Sel / 0 | 30 sec | 30 sec |
| **HK30WA362** | HK30WA335 | HK30WB342 | 7.5 HP 575V | FLT/ (14) Fault | 10.4 | 0Hz | 60Hz | 4kHz | Auto Automatic | Ramp | Not Sel / 0 | 30 sec | 30 sec |
| **HK30WA354** | HK30WA305 | HK30WB306 | 5.0 HP 230V | FLT/ (14) Fault | 19.2 | 0Hz | 60Hz | 4kHz | Auto Automatic | Ramp | Not Sel / 0 | 30 sec | 30 sec |
| **HK30WA358** | HK30WA320 | HK30WB322 | 5.0 HP 460V | FLT/ (14) Fault | 9.7 | 0Hz | 60Hz | 4kHz | Auto Automatic | Ramp | Not Sel / 0 | 30 sec | 30 sec |
| **HK30WA362** | HK30WA335 | HK30WB342 | 5.0 HP 575V | FLT/ (14) Fault | 5.9 | 0Hz | 60Hz | 4kHz | Auto Automatic | Ramp | Not Sel / 0 | 30 sec | 30 sec |
| **HK30WA354** | HK30WA305 | HK30WB306 | 5.3 HP 230V | FLT/ (14) Fault | 15.0 | 0Hz | 60Hz | 4kHz | Auto Automatic | Ramp | Not Sel / 0 | 30 sec | 30 sec |
| **HK30WA358** | HK30WA320 | HK30WB322 | 5.3 HP 460V | FLT/ (14) Fault | 7.4 | 0Hz | 60Hz | 4kHz | Auto Automatic | Ramp | Not Sel / 0 | 30 sec | 30 sec |
| **HK30WA362** | HK30WA335 | HK30WB342 | 5.3 HP 575V | FLT/ (14) Fault | 6.2 | 0Hz | 60Hz | 4kHz | Auto Automatic | Ramp | Not Sel / 0 | 30 sec | 30 sec |
| **HK30WA354** | HK30WA305 | HK30WB306 | 7.5 HP 230V | FLT/ (14) Fault | 26.3 | 0Hz | 60Hz | 4kHz | Auto Automatic | Ramp | Not Sel / 0 | 30 sec | 30 sec |
| **HK30WA358** | HK30WA320 | HK30WB322 | 7.5 HP 460V | FLT/ (14) Fault | 13.2 | 0Hz | 60Hz | 4kHz | Auto Automatic | Ramp | Not Sel / 0 | 30 sec | 30 sec |
| **HK30WA362** | HK30WA335 | HK30WB342 | 7.5 HP 575V | FLT/ (14) Fault | 9.3 | 0Hz | 60Hz | 4kHz | Auto Automatic | Ramp | Not Sel / 0 | 30 sec | 30 sec |
| **HK30WA355** | HK30WA306 | HK30WB307 | 10.0 HP 230V | FLT/ (14) Fault | 32.2 | 0Hz | 60Hz | 4kHz | Auto Automatic | Ramp | Not Sel / 0 | 30 sec | 30 sec |
| **HK30WA359** | HK30WA321 | HK30WB323 | 10.0 HP 460V | FLT/ (14) Fault | 14.5 | 0Hz | 60Hz | 4kHz | Auto Automatic | Ramp | Not Sel / 0 | 30 sec | 30 sec |
| **HK30WA363** | HK30WA336 | HK30WB343 | 10.0 HP 575V | FLT/ (14) Fault | 12.7 | 0Hz | 60Hz | 4kHz | Auto Automatic | Ramp | Not Sel / 0 | 30 sec | 30 sec |
| **HK30WA355** | HK30WA306 | HK30WB307 | 10.0 HP 230V | FLT/ (14) Fault | 35.4 | 0Hz | 60Hz | 4kHz | Auto Automatic | Ramp | Not Sel / 0 | 30 sec | 30 sec |
| **HK30WA359** | HK30WA321 | HK30WB323 | 10.0 HP 460V | FLT/ (14) Fault | 17.7 | 0Hz | 60Hz | 4kHz | Auto Automatic | Ramp | Not Sel / 0 | 30 sec | 30 sec |
| **HK30WA363** | HK30WA336 | HK30WB343 | 10.0 HP 575V | FLT/ (14) Fault | 12.7 | 0Hz | 60Hz | 4kHz | Auto Automatic | Ramp | Not Sel / 0 | 30 sec | 30 sec |

## Table 41 — ACH550/580 VFD Parameters — 40RUA 07-30, 40RUS 08-30 and 40RUQ 07-25

| VFD Part Number | ACH550 Replacement Component Part Number | ACH580 Replacement Component Part Number | Description | Motor Part Number | Volt (9905/ 99.07) | Nom Amps (9906/ 99.06) | Motor Nom Freq (9907/ 99.08) | Nom RPM (9908) | Nom HP (9909/ 99.09) | Const Speed Sel (1201/ 28.22) | Const Speed 1 (1202/ 28.26) | Const Speed 2 (1203/ 28.27) | Const Speed 3 (1204/ 28.28) |
|---|---|---|---|---|---|---|---|---|---|---|---|---|---|
| **HK30WA360** | HK30WA360 | HK30WB369 | 1.7 HP 575V | HD56FR579 | 575 | 2.8 | 60Hz | 1725 | 1.7 | DI 2,3 | 40Hz | 60Hz | 60Hz |
| **HK30WA360** | HK30WA360 | HK30WB369 | 2.4 HP 575V | HD56FE577 | 575 | 3.8 | 60Hz | 1725 | 2.4 | DI 2,3 | 40Hz | 60Hz | 60Hz |
| **HK30WA361** | HK30WA361 | HK30WB370 | 3.7 HP 575V | HD58FE577 | 575 | 4.9 | 60Hz | 1725 | 3.7 | DI 2,3 | 40Hz | 60Hz | 60Hz |
| **HK30WA361** | HK30WA361 | HK30WB370 | 3.7 HP 575V | HD58FE577 | 575 | 4.5 | 60Hz | 1725 | 3.7 | DI 2,3 | 40Hz | 60Hz | 60Hz |
| **HK30WA362** | HK30WA362 | HK30WB371 | 5.0 HP 575V | HD60FK577 | 575 | 8.0 | 60Hz | 1725 | 5 | DI 2,3 | 40Hz | 60Hz | 60Hz |
| **HK30WA362** | HK30WA362 | HK30WB371 | 7.5 HP 575V | HD62FL576 | 575 | 9.0 | 60Hz | 1725 | 7.5 | DI 2,3 | 40Hz | 60Hz | 60Hz |
| **HK30WA363** | HK30WA363 | HK30WB372 | 10 HP 575V | HD64FL576 | 575 | 11.0 | 60Hz | 1725 | 10 | DI 2,3 | 40Hz | 60Hz | 60Hz |
| **HK30WA360** | HK30WA360 | HK30WB369 | 1.7 HP 575V | HD56FR579 | 575 | 2.8 | 60Hz | 1725 | 1.7 | DI 3 | 40Hz | 60Hz | 60Hz |
| **HK30WA360** | HK30WA360 | HK30WB369 | 2.4 HP 575V | HD56FE577 | 575 | 3.8 | 60Hz | 1725 | 2.4 | DI 3 | 40Hz | 60Hz | 60Hz |
| **HK30WA361** | HK30WA361 | HK30WB370 | 3.7 HP 575V | HD58FE577 | 575 | 4.9 | 60Hz | 1725 | 3.7 | DI 3 | 40Hz | 60Hz | 60Hz |
| **HK30WA361** | HK30WA361 | HK30WB370 | 3.7 HP 575V | HD58FE577 | 575 | 4.5 | 60Hz | 1725 | 3.7 | DI 3 | 40Hz | 60Hz | 60Hz |

## Table 41 — ACH550/580 VFD Parameters — 40RUA 07-30, 40RUS 08-30 and 40RUQ 07-25 (cont)

| VFD Part Number | ACH550 Replacement Component Part Number | ACH580 Replacement Component Part Number | Relay Out 3 (1403/10.30) | Max Amps (2003/ 30.17) | Min Freq (2007/ 30.13) | Max Freq (2008/ 30.14) | Switch Freq (2606/ 97.01) | Start Fcn (2101/21.19) | Stop Fcn (2102/ 21.03) | Accel/ Decel (2201/ 28.71) | Accel (2202/ 28.72) | Decel (2203/ 28.73) |
|---|---|---|---|---|---|---|---|---|---|---|---|---|
| **HK30WA360** | HK30WA360 | HK30WB369 | FLT/ (14) Fault | 3.2 | 0Hz | 60Hz | 4kHz | Auto / Automatic | Ramp | Not Sel / 0 | 30s | 30s |
| **HK30WA360** | HK30WA360 | HK30WB369 | FLT/ (14) Fault | 4.4 | 0Hz | 60Hz | 4kHz | Auto / Automatic | Ramp | Not Sel / 0 | 30s | 30s |
| **HK30WA361** | HK30WA361 | HK30WB370 | FLT/ (14) Fault | 5.6 | 0Hz | 60Hz | 4kHz | Auto / Automatic | Ramp | Not Sel / 0 | 30s | 30s |
| **HK30WA361** | HK30WA361 | HK30WB370 | FLT/ (14) Fault | 5.2 | 0Hz | 60Hz | 4kHz | Auto / Automatic | Ramp | Not Sel / 0 | 30s | 30s |
| **HK30WA362** | HK30WA362 | HK30WB371 | FLT/ (14) Fault | 9.2 | 0Hz | 60Hz | 4kHz | Auto / Automatic | Ramp | Not Sel / 0 | 30s | 30s |
| **HK30WA362** | HK30WA362 | HK30WB371 | FLT/ (14) Fault | 10.4 | 0Hz | 60Hz | 4kHz | Auto / Automatic | Ramp | Not Sel / 0 | 30s | 30s |
| **HK30WA363** | HK30WA363 | HK30WB372 | FLT/ (14) Fault | 12.7 | 0Hz | 60Hz | 4kHz | Auto / Automatic | Ramp | Not Sel / 0 | 30s | 30s |
| **HK30WA360** | HK30WA360 | HK30WB369 | FLT/ (14) Fault | 3.2 | 0Hz | 60Hz | 4kHz | Auto / Automatic | Ramp | Not Sel / 0 | 30s | 30s |
| **HK30WA360** | HK30WA360 | HK30WB369 | FLT/ (14) Fault | 4.4 | 0Hz | 60Hz | 4kHz | Auto / Automatic | Ramp | Not Sel / 0 | 30s | 30s |
| **HK30WA361** | HK30WA361 | HK30WB370 | FLT/ (14) Fault | 5.6 | 0Hz | 60Hz | 4kHz | Auto / Automatic | Ramp | Not Sel / 0 | 30s | 30s |
| **HK30WA361** | HK30WA361 | HK30WB370 | FLT/ (14) Fault | 5.2 | 0Hz | 60Hz | 4kHz | Auto / Automatic | Ramp | Not Sel / 0 | 30s | 30s |

## Table 42 — ACS320 VFD Parameters — 48/50TC07-16 and 50TCQ07-14 (208/230V and 460V units only)

| VFD Part Number | Replacement Component Part Number | Description | Motor Part Number | Volt (9905) | Nom Amps (9906) | Motor Nom Freq (9907) | Nom RPM (9908) | Nom HP (9909) | Const Speed Sel (1201) | Const Speed 1 (1202) | Const Speed 2 (1203) | Const Speed 3 (1204) |
|---|---|---|---|---|---|---|---|---|---|---|---|---|
| **HK30WA523** | HK30WA506 | SRT 1.7 HP 230V | HD56FR233 | 230 | 5.8 | 60 Hz | 1725 | 1.7 | DI 2,3 | 40 Hz | 60 Hz | 60 Hz |
| **HK30WA530** | HK30WA512 | SRT 1.7 HP 460V | HD56FR463 | 460 | 2.9 | 60 Hz | 1725 | 1.7 | DI 2,3 | 40 Hz | 60H z | 60 Hz |
| **HK30WA523** | HK30WA506 | SRT 2.4 HP 230V | HD56FE653 | 230 | 7.9 | 60 Hz | 1725 | 2.4 | DI 2,3 | 40 Hz | 60 Hz | 60 Hz |
| **HK30WA530** | HK30WA512 | SRT 2.4 HP 460V | HD56FE653 | 460 | 3.6 | 60 Hz | 1725 | 2.4 | DI 2,3 | 40 Hz | 60 Hz | 60 Hz |
| **HK30WA523** | HK30WA506 | SRT 2.9 HP 230V | HD58FE654 | 230 | 9.2 | 60 Hz | 1725 | 2.9 | DI 2,3 | 40 Hz | 60 Hz | 60 Hz |
| **HK30WA530** | HK30WA512 | SRT 2.9 HP 460V | HD58FE654 | 460 | 4.2 | 60 Hz | 1725 | 2.9 | DI 2,3 | 40 Hz | 60 Hz | 60 Hz |
| **HK30WA523** | HK30WA506 | SRT 3.7 HP 230V | HD60FE656 | 230 | 11.7 | 60 Hz | 1725 | 3.7 | DI 2,3 | 40 Hz | 60 Hz | 60 Hz |
| **HK30WA534** | HK30WA517 | SRT 3.7 HP 460V | HD60FE656 | 460 | 5.4 | 60 Hz | 1725 | 3.7 | DI 2,3 | 40 Hz | 60 Hz | 60 Hz |
| **HK30WA524** | HK30WA507 | SRT 5.3 HP 230V | HD60FK658 | 230 | 13.6 | 60 Hz | 1740 | 5.3 | DI 2,3 | 40 Hz | 60 Hz | 60 Hz |
| **HK30WA532** | HK30WA514 | SRT 5.3 HP 460V | HD60FK658 | 460 | 6.4 | 60 Hz | 1740 | 5.3 | DI 2,3 | 40 Hz | 60 Hz | 60 Hz |
| **HK30WA523** | HK30WA506 | STR 2.9 HP 230V | HD58FE654 | 230 | 9.2 | 60 Hz | 1725 | 2.9 | DI 2,3 | 40 Hz | 60 Hz | 60 Hz |
| **HK30WA530** | HK30WA512 | STR 2.9 HP 460V | HD58FE654 | 460 | 4.2 | 60 Hz | 1725 | 2.9 | DI 2,3 | 40 Hz | 60 Hz | 60 Hz |
| **HK30WA523** | HK30WA506 | STR 3.7 HP 230V | HD60FE656 | 230 | 11.7 | 60 Hz | 1725 | 3.7 | DI 2,3 | 40 Hz | 60 Hz | 60 Hz |
| **HK30WA534** | HK30WA517 | STR 3.7 HP 460V | HD60FE656 | 460 | 5.4 | 60 Hz | 1725 | 3.7 | DI 2,3 | 40 Hz | 60 Hz | 60 Hz |
| **HK30WA524** | HK30WA507 | STR 5.0 HP 230V | HD60FK657 | 230 | 17.1 | 60 Hz | 1760 | 5.0 | DI 2,3 | 40 Hz | 60 Hz | 60 Hz |
| **HK30WA532** | HK30WA514 | STR 5.0 HP 460V | HD60FK657 | 460 | 8.6 | 60 Hz | 1760 | 5.0 | DI 2,3 | 40 Hz | 60 Hz | 60 Hz |

## Table 42 — ACS320 VFD Parameters — 48/50TC07-16 and 50TCQ07-14 (208/230V and 460V units only) (cont)

| VFD Part Number | Replacement Component Part Number | Description | Motor Part Number | Relay Out 1 (1401) | Max Amps (2003) | Min Freq (2007) | Max Freq (2008) | Switch Freq (2606) | Start Fcn (2101) | Stop Fcn (2102) | Accel/ Decel (2201) | Accel (2202) | Decel (2203) |
|---|---|---|---|---|---|---|---|---|---|---|---|---|---|
| **HK30WA523** | HK30WA506 | SRT 1.7 HP 230V | HD56FR233 | 16 FLT/ Alarm | 6.7 | 0 Hz | 60 Hz | 4 kHz | Auto | Ramp | Not Sel | 30 sec | 30 sec |
| **HK30WA530** | HK30WA512 | SRT 1.7 HP 460V | HD56FR463 | 16 FLT/Alarm | 3.3 | 0 Hz | 60 Hz | 4 kHz | Auto | Ramp | Not Sel | 30 sec | 30 sec |
| **HK30WA523** | HK30WA506 | SRT 2.4 HP 230V | HD56FE653 | 16 FLT/Alarm | 9.1 | 0 Hz | 60 Hz | 4 kHz | Auto | Ramp | Not Sel | 30 sec | 30 sec |
| **HK30WA530** | HK30WA512 | SRT 2.4 HP 460V | HD56FE653 | 16 FLT/Alarm | 4.1 | 0 Hz | 60 Hz | 4 kHz | Auto | Ramp | Not Sel | 30 sec | 30 sec |
| **HK30WA523** | HK30WA506 | SRT 2.9 HP 230V | HD58FE654 | 16 FLT/Alarm | 10.6 | 0 Hz | 60 Hz | 4 kHz | Auto | Ramp | Not Sel | 30 sec | 30 sec |
| **HK30WA530** | HK30WA512 | SRT 2.9 HP 460V | HD58FE654 | 16 FLT/Alarm | 4.8 | 0 Hz | 60 Hz | 4 kHz | Auto | Ramp | Not Sel | 30 sec | 30 sec |
| **HK30WA523** | HK30WA506 | SRT 3.7 HP 230V | HD60FE656 | 16 FLT/Alarm | 13.5 | 0 Hz | 60 Hz | 4 kHz | Auto | Ramp | Not Sel | 30 sec | 30 sec |
| **HK30WA534** | HK30WA517 | SRT 3.7 HP 460V | HD60FE656 | 16 FLT/Alarm | 6.2 | 0 Hz | 60 Hz | 4 kHz | Auto | Ramp | Not Sel | 30 sec | 30 sec |
| **HK30WA524** | HK30WA507 | SRT 5.3 HP 230V | HD60FK658 | 16 FLT/Alarm | 15.6 | 0 Hz | 60 Hz | 4 kHz | Auto | Ramp | Not Sel | 30 sec | 30 sec |
| **HK30WA532** | HK30WA514 | SRT 5.3 HP 460V | HD60FK658 | 16 FLT/Alarm | 7.4 | 0 Hz | 60 Hz | 4 kHz | Auto | Ramp | Not Sel | 30 sec | 30 sec |
| **HK30WA523** | HK30WA506 | STR 2.9 HP 230V | HD58FE654 | 16 FLT/Alarm | 10.6 | 0 Hz | 60 Hz | 4 kHz | Auto | Ramp | Not Sel | 30 sec | 30 sec |
| **HK30WA530** | HK30WA512 | STR 2.9 HP 460V | HD58FE654 | 16 FLT/Alarm | 4.8 | 0 Hz | 60 Hz | 4 kHz | Auto | Ramp | Not Sel | 30 sec | 30 sec |
| **HK30WA523** | HK30WA506 | STR 3.7 HP 230V | HD60FE656 | 16 FLT/Alarm | 13.5 | 0 Hz | 60 Hz | 4 kHz | Auto | Ramp | Not Sel | 30 sec | 30 sec |
| **HK30WA534** | HK30WA517 | STR 3.7 HP 460V | HD60FE656 | 16 FLT/Alarm | 6.2 | 0 Hz | 60 Hz | 4 kHz | Auto | Ramp | Not Sel | 30 sec | 30 sec |
| **HK30WA524** | HK30WA507 | STR 5.0 HP 230V | HD60FK657 | 16 FLT/Alarm | 19.7 | 0 Hz | 60 Hz | 4 kHz | Auto | Ramp | Not Sel | 30 sec | 30 sec |
| **HK30WA532** | HK30WA514 | STR 5.0 HP 460V | HD60FK657 | 16 FLT/Alarm | 9.9 | 0 Hz | 60 Hz | 4 kHz | Auto | Ramp | Not Sel | 30 sec | 30 sec |

## Table 43 — ACS320 VFD Parameters — 48/50TC17-30 and 50TCQ17-24 (208/230V and 460V units only)

| VFD Part Number | Replacement Component Part Number | Description | Motor Part Number | Volt (9905) | Nom Amps (9906) | Motor Nom Freq (9907) | Nom RPM (9908) | Nom HP (9909) | Const Speed Sel (1201) | Const Speed 1 (1202) | Const Speed 2 (1203) | Const Speed 3 (1204) |
|---|---|---|---|---|---|---|---|---|---|---|---|---|
| **HK30WA523** | HK30WA506 | MRT 2.9 HP 230V | HD58FE654 | 230 | 9.2 | 60 Hz | 1725 | 2.9 | DI 2,3 | 40 Hz | 60 Hz | 60 Hz |
| **HK30WA530** | HK30WA512 | MRT 2.9 HP 460V | HD58FE654 | 460 | 4.2 | 60 Hz | 1725 | 2.9 | DI 2,3 | 40 Hz | 60 Hz | 60 Hz |
| **HK30WA523** | HK30WA506 | MRT 3.7 HP 230V | HD60FE656 | 230 | 11.7 | 60 Hz | 1725 | 3.7 | DI 2,3 | 40 Hz | 60 Hz | 60 Hz |
| **HK30WA534** | HK30WA517 | MRT 3.7 HP 460V | HD60FE656 | 460 | 5.4 | 60 Hz | 1725 | 3.7 | DI 2,3 | 40 Hz | 60 Hz | 60 Hz |
| **HK30WA524** | HK30WA507 | MRT 5.0 HP 230V | HD60FK657 | 230 | 17.1 | 60 Hz | 1760 | 5.0 | DI 2,3 | 40 Hz | 60 Hz | 60 Hz |
| **HK30WA532** | HK30WA514 | MRT 5.0 HP 460V | HD60FK657 | 460 | 8.6 | 60 Hz | 1760 | 5.0 | DI 2,3 | 40 Hz | 60 Hz | 60 Hz |
| **HK30WA524** | HK30WA507 | MRT 7.5 HP 230V | HD62FK654 | 230 | 23.5 | 60 Hz | 1760 | 7.5 | DI 2,3 | 40 Hz | 60 Hz | 60 Hz |
| **HK30WA532** | HK30WA514 | MRT 7.5 HP 460V | HD62FK654 | 460 | 11.9 | 60 Hz | 1760 | 7.5 | DI 2,3 | 40 Hz | 60 Hz | 60 Hz |
| **HK30WA524** | HK30WA507 | MRT 5.3 HP 230V | HD60FK658 | 230 | 13.6 | 60 Hz | 1740 | 5.3 | DI 2,3 | 40 Hz | 60 Hz | 60 Hz |
| **HK30WA532** | HK30WA514 | MRT 5.3 HP 460V | HD60FK658 | 460 | 6.4 | 60 Hz | 1740 | 5.3 | DI 2,3 | 40 Hz | 60 Hz | 60 Hz |
| **HK30WA525** | HK30WA508 | MRT 10.0 HP 230V | HD64FK654 | 230 | 30.4 | 60 Hz | 1755 | 10.0 | DI 2,3 | 40 Hz | 60 Hz | 60 Hz |
| **HK30WA533** | HK30WA515 | MRT 10.0 HP 460V | HD64FK654 | 460 | 15.2 | 60 Hz | 1755 | 10.0 | DI 2,3 | 40 Hz | 60 Hz | 60 Hz |

## Table 43 — ACS320 VFD Parameters — 48/50TC17-30 and 50TCQ17-24 (208/230V and 460V units only) (cont)

| VFD Part Number | Replacement Component Part Number | Description | Motor Part Number | Relay Out 1 (1401) | Max Amps (2003) | Min Freq (2007) | Max Freq (2008) | Switch Freq (2606) | Start Fcn (2101) | Stop Fcn (2102) | Accel/ Decel (2201) | Accel (2202) | Decel (2203) |
|---|---|---|---|---|---|---|---|---|---|---|---|---|---|
| **HK30WA523** | HK30WA506 | MRT 2.9 HP 230V | HD58FE654 | 16 FLT/Alarm | 10.6 | 0 Hz | 60 Hz | 4 kHz | Auto | Ramp | Not Sel | 30 sec | 30 sec |
| **HK30WA530** | HK30WA512 | MRT 2.9 HP 460V | HD58FE654 | 16 FLT/Alarm | 4.8 | 0 Hz | 60 Hz | 4 kHz | Auto | Ramp | Not Sel | 30 sec | 30 sec |
| **HK30WA523** | HK30WA506 | MRT 3.7 HP 230V | HD60FE656 | 16 FLT/Alarm | 13.5 | 0 Hz | 60 Hz | 4 kHz | Auto | Ramp | Not Sel | 30 sec | 30 sec |
| **HK30WA534** | HK30WA517 | MRT 3.7 HP 460V | HD60FE656 | 16 FLT/Alarm | 6.2 | 0 Hz | 60 Hz | 4 kHz | Auto | Ramp | Not Sel | 30 sec | 30 sec |
| **HK30WA524** | HK30WA507 | MRT 5.0 HP 230V | HD60FK657 | 16 FLT/Alarm | 19.7 | 0 Hz | 60 Hz | 4 kHz | Auto | Ramp | Not Sel | 30 sec | 30 sec |
| **HK30WA532** | HK30WA514 | MRT 5.0 HP 460V | HD60FK657 | 16 FLT/Alarm | 9.9 | 0 Hz | 60 Hz | 4 kHz | Auto | Ramp | Not Sel | 30 sec | 30 sec |
| **HK30WA524** | HK30WA507 | MRT 7.5 HP 230V | HD62FK654 | 16 FLT/Alarm | 27.0 | 0 Hz | 60 Hz | 4 kHz | Auto | Ramp | Not Sel | 30 sec | 30 sec |
| **HK30WA532** | HK30WA514 | MRT 7.5 HP 460V | HD62FK654 | 16 FLT/Alarm | 13.7 | 0 Hz | 60 Hz | 4 kHz | Auto | Ramp | Not Sel | 30 sec | 30 sec |
| **HK30WA524** | HK30WA507 | MRT 5.3 HP 230V | HD60FK658 | 16 FLT/Alarm | 15.6 | 0 Hz | 60 Hz | 4 kHz | Auto | Ramp | Not Sel | 30 sec | 30 sec |
| **HK30WA532** | HK30WA514 | MRT 5.3 HP 460V | HD60FK658 | 16 FLT/Alarm | 7.4 | 0 Hz | 60 Hz | 4 kHz | Auto | Ramp | Not Sel | 30 sec | 30 sec |
| **HK30WA525** | HK30WA508 | MRT 10.0 HP 230V | HD64FK654 | 16 FLT/Alarm | 35.0 | 0 Hz | 60 Hz | 4 kHz | Auto | Ramp | Not Sel | 30 sec | 30 sec |
| **HK30WA533** | HK30WA515 | MRT 10.0 HP 460V | HD64FK654 | 16 FLT/Alarm | 17.1 | 0 Hz | 60 Hz | 4 kHz | Auto | Ramp | Not Sel | 30 sec | 30 sec |

## Table 44 — ACS320 VFD Parameters — 40RU (208/230V and 460V units only)

| VFD Part Number | Replacement Component Part Number | Description | Motor Part Number | Volt (9905) | Nom Amps (9906) | Motor Nom Freq (9907) | Nom RPM (9908) | Nom HP (9909) | Const Speed Sel (1201) | Const Speed 1 (1202) | Const Speed 2 (1203) | Const Speed 3 (1204) |
|---|---|---|---|---|---|---|---|---|---|---|---|---|
| **HK30WA523** | HK30WA506 | 1.7 HP 230V | HD56FR233 | 230 | 5.8 | 60Hz | 1725 | 1.7 | DI 2,3 | 40Hz | 60Hz | 60Hz |
| **HK30WA530** | HK30WA512 | 1.7 HP 460V | HD56FR463 | 460 | 2.9 | 60Hz | 1725 | 1.7 | DI 2,3 | 40Hz | 60Hz | 60Hz |
| **HK30WA523** | HK30WA506 | 2.4 HP 230V | HD56FE653 | 230 | 7.1 | 60Hz | 1725 | 2.4 | DI 2,3 | 40Hz | 60Hz | 60Hz |
| **HK30WA530** | HK30WA512 | 2.4 HP 460V | HD56FE653 | 460 | 3.4 | 60Hz | 1725 | 2.4 | DI 2,3 | 40Hz | 60Hz | 60Hz |
| **HK30WA523** | HK30WA506 | 2.9 HP 230V | HD58FE654 | 230 | 8.6 | 60Hz | 1725 | 2.9 | DI 2,3 | 40Hz | 60Hz | 60Hz |
| **HK30WA530** | HK30WA512 | 2.9 HP 460V | HD58FE654 | 460 | 3.8 | 60Hz | 1725 | 2.9 | DI 2,3 | 40Hz | 60Hz | 60Hz |
| **HK30WA523** | HK30WA506 | 3.7 HP 230V | HD60FE656 | 230 | 10.8 | 60Hz | 1725 | 3.7 | DI 2,3 | 40Hz | 60Hz | 60Hz |
| **HK30WA534** | HK30WA517 | 3.7 HP 460V | HD60FE656 | 460 | 4.9 | 60Hz | 1725 | 3.7 | DI 2,3 | 40Hz | 60Hz | 60Hz |
| **HK30WA523** | HK30WA506 | 3.7 HP 230V | HD58FR236 | 230 | 10.2 | 60Hz | 1725 | 3.7 | DI 2,3 | 40Hz | 60Hz | 60Hz |
| **HK30WA534** | HK30WA517 | 3.7 HP 460V | HD58FR236 | 460 | 4.8 | 60Hz | 1725 | 3.7 | DI 2,3 | 40Hz | 60Hz | 60Hz |
| **HK30WA524** | HK30WA507 | 5.0 HP 230V | HD60FK657 | 230 | 17.0 | 60Hz | 1760 | 5 | DI 2,3 | 40Hz | 60Hz | 60Hz |
| **HK30WA532** | HK30WA514 | 5.0 HP 460V | HD60FK657 | 460 | 7.6 | 60Hz | 1760 | 5 | DI 2,3 | 40Hz | 60Hz | 60Hz |
| **HK30WA524** | HK30WA507 | 7.5 HP 230V | HD62FK654 | 230 | 21.5 | 60Hz | 1760 | 7.5 | DI 2,3 | 40Hz | 60Hz | 60Hz |
| **HK30WA532** | HK30WA514 | 7.5 HP 460V | HD62FK654 | 460 | 14.3 | 60Hz | 1760 | 7.5 | DI 2,3 | 40Hz | 60Hz | 60Hz |
| **HK30WA525** | HK30WA508 | 10 HP 230V | HD64FK654 | 230 | 28 | 60Hz | 1755 | 10 | DI 2,3 | 40Hz | 60Hz | 60Hz |
| **HK30WA533** | HK30WA515 | 10 HP 460V | HD64FK654 | 460 | 15.2 | 60Hz | 1755 | 10 | DI 2,3 | 40Hz | 60Hz | 60Hz |
| **HK30WA523** | HK30WA506 | 1.7 HP 230V | HD56FR233 | 230 | 5.8 | 60Hz | 1725 | 1.7 | DI 2,3 | 40Hz | 60Hz | 60Hz |
| **HK30WA530** | HK30WA512 | 1.7 HP 460V | HD56FR463 | 460 | 2.9 | 60Hz | 1725 | 1.7 | DI 2,3 | 40Hz | 60Hz | 60Hz |
| **HK30WA523** | HK30WA506 | 2.4 HP 230V | HD56FE653 | 230 | 7.1 | 60Hz | 1725 | 2.4 | DI 2,3 | 40Hz | 60Hz | 60Hz |
| **HK30WA530** | HK30WA512 | 2.4 HP 460V | HD56FE653 | 460 | 3.4 | 60Hz | 1725 | 2.4 | DI 2,3 | 40Hz | 60Hz | 60Hz |
| **HK30WA523** | HK30WA506 | 3.7 HP 230V | HD60FE656 | 230 | 10.8 | 60Hz | 1725 | 3.7 | DI 2,3 | 40Hz | 60Hz | 60Hz |
| **HK30WA534** | HK30WA517 | 3.7 HP 460V | HD60FE656 | 460 | 4.9 | 60Hz | 1725 | 3.7 | DI 2,3 | 40Hz | 60Hz | 60Hz |
| **HK30WA523** | HK30WA506 | 3.7 HP 230V | HD58FR236 | 230 | 10.2 | 60Hz | 1725 | 3.7 | DI 2,3 | 40Hz | 60Hz | 60Hz |
| **HK30WA534** | HK30WA517 | 3.7 HP 460V | HD58FR236 | 460 | 4.8 | 60Hz | 1725 | 3.7 | DI 2,3 | 40Hz | 60Hz | 60Hz |

## Table 44 — ACS320 VFD Parameters — 40RU (208/230V and 460V units only) (cont)

| VFD Part Number | Replacement Component Part Number | Description | Motor Part Number | Relay Out 1 (1403) | Max Amps (2003) | Min Freq (2007) | Max Freq (2008) | Switch Freq (2606) | Start Fcn (2101) | Stop Fcn (2102) | Accel/ Decel (2201) | Accel (2202) | Decel (2203) |
|---|---|---|---|---|---|---|---|---|---|---|---|---|---|
| **HK30WA523** | HK30WA506 | 1.7 HP 230V | HD56FR233 | 16 FLT/Alarm | 6.7 | 0Hz | 60Hz | 4kHz | Auto | (1) Coast | Not Sel | 30 sec | 30 sec |
| **HK30WA530** | HK30WA512 | 1.7 HP 460V | HD56FR463 | 16 FLT/Alarm | 3.3 | 0Hz | 60Hz | 4kHz | Auto | (1) Coast | Not Sel | 30 sec | 30 sec |
| **HK30WA523** | HK30WA506 | 2.4 HP 230V | HD56FE653 | 16 FLT/Alarm | 8.2 | 0Hz | 60Hz | 4kHz | Auto | (1) Coast | Not Sel | 30 sec | 30 sec |
| **HK30WA530** | HK30WA512 | 2.4 HP 460V | HD56FE653 | 16 FLT/Alarm | 3.9 | 0Hz | 60Hz | 4kHz | Auto | (1) Coast | Not Sel | 30 sec | 30 sec |
| **HK30WA523** | HK30WA506 | 2.9 HP 230V | HD58FE654 | 16 FLT/Alarm | 9.9 | 0Hz | 60Hz | 4kHz | Auto | (1) Coast | Not Sel | 30 sec | 30 sec |
| **HK30WA530** | HK30WA512 | 2.9 HP 460V | HD58FE654 | 16 FLT/Alarm | 4.4 | 0Hz | 60Hz | 4kHz | Auto | (1) Coast | Not Sel | 30 sec | 30 sec |
| **HK30WA523** | HK30WA506 | 3.7 HP 230V | HD60FE656 | 16 FLT/Alarm | 12.4 | 0Hz | 60Hz | 4kHz | Auto | (1) Coast | Not Sel | 30 sec | 30 sec |
| **HK30WA534** | HK30WA517 | 3.7 HP 460V | HD60FE656 | 16 FLT/Alarm | 5.6 | 0Hz | 60Hz | 4kHz | Auto | (1) Coast | Not Sel | 30 sec | 30 sec |
| **HK30WA523** | HK30WA506 | 3.7 HP 230V | HD58FR236 | 16 FLT/Alarm | 11.7 | 0Hz | 60Hz | 4kHz | Auto | (1) Coast | Not Sel | 30 sec | 30 sec |
| **HK30WA534** | HK30WA517 | 3.7 HP 460V | HD58FR236 | 16 FLT/Alarm | 5.5 | 0Hz | 60Hz | 4kHz | Auto | (1) Coast | Not Sel | 30 sec | 30 sec |
| **HK30WA524** | HK30WA507 | 5.0 HP 230V | HD60FK657 | 16 FLT/Alarm | 19.6 | 0Hz | 60Hz | 4kHz | Auto | (1) Coast | Not Sel | 30 sec | 30 sec |
| **HK30WA532** | HK30WA514 | 5.0 HP 460V | HD60FK657 | 16 FLT/Alarm | 8.7 | 0Hz | 60Hz | 4kHz | Auto | (1) Coast | Not Sel | 30 sec | 30 sec |
| **HK30WA524** | HK30WA507 | 7.5 HP 230V | HD62FK654 | 16 FLT/Alarm | 24.7 | 0Hz | 60Hz | 4kHz | Auto | (1) Coast | Not Sel | 30 sec | 30 sec |
| **HK30WA532** | HK30WA514 | 7.5 HP 460V | HD62FK654 | 16 FLT/Alarm | 16.4 | 0Hz | 60Hz | 4kHz | Auto | (1) Coast | Not Sel | 30 sec | 30 sec |
| **HK30WA525** | HK30WA508 | 10 HP 230V | HD64FK654 | 16 FLT/Alarm | 32.2 | 0Hz | 60Hz | 4kHz | Auto | (1) Coast | Not Sel | 30 sec | 30 sec |
| **HK30WA533** | HK30WA515 | 10 HP 460V | HD64FK654 | 16 FLT/Alarm | 17.5 | 0Hz | 60Hz | 4kHz | Auto | (1) Coast | Not Sel | 30 sec | 30 sec |
| **HK30WA523** | HK30WA506 | 1.7 HP 230V | HD56FR233 | 16 FLT/Alarm | 6.7 | 0Hz | 60Hz | 4kHz | (1) AUTO | (1) Coast | Not Sel | 30 sec | 10.0 sec |
| **HK30WA530** | HK30WA512 | 1.7 HP 460V | HD56FR463 | 16 FLT/Alarm | 3.3 | 0Hz | 60Hz | 4kHz | (1) AUTO | (1) Coast | Not Sel | 30 sec | 10.0 sec |
| **HK30WA523** | HK30WA506 | 2.4 HP 230V | HD56FE653 | 16 FLT/Alarm | 8.2 | 0Hz | 60Hz | 4kHz | (1) AUTO | (1) Coast | Not Sel | 30 sec | 10.0 sec |
| **HK30WA530** | HK30WA512 | 2.4 HP 460V | HD56FE653 | 16 FLT/Alarm | 3.9 | 0Hz | 60Hz | 4kHz | (1) AUTO | (1) Coast | Not Sel | 30 sec | 10.0 sec |
| **HK30WA523** | HK30WA506 | 3.7 HP 230V | HD60FE656 | 16 FLT/Alarm | 12.4 | 0Hz | 60Hz | 4kHz | (1) AUTO | (1) Coast | Not Sel | 30 sec | 10.0 sec |
| **HK30WA534** | HK30WA517 | 3.7 HP 460V | HD60FE656 | 16 FLT/Alarm | 5.6 | 0Hz | 60Hz | 4kHz | (1) AUTO | (1) Coast | Not Sel | 30 sec | 10.0 sec |
| **HK30WA523** | HK30WA506 | 3.7 HP 230V | HD58FR236 | 16 FLT/Alarm | 11.7 | 0Hz | 60Hz | 4kHz | (1) AUTO | (1) Coast | Not Sel | 30 sec | 10.0 sec |
| **HK30WA534** | HK30WA517 | 3.7 HP 460V | HD58FR236 | 16 FLT/Alarm | 5.5 | 0Hz | 60Hz | 4kHz | (1) AUTO | (1) Coast | Not Sel | 30 sec | 10.0 sec |

© 2023 Carrier