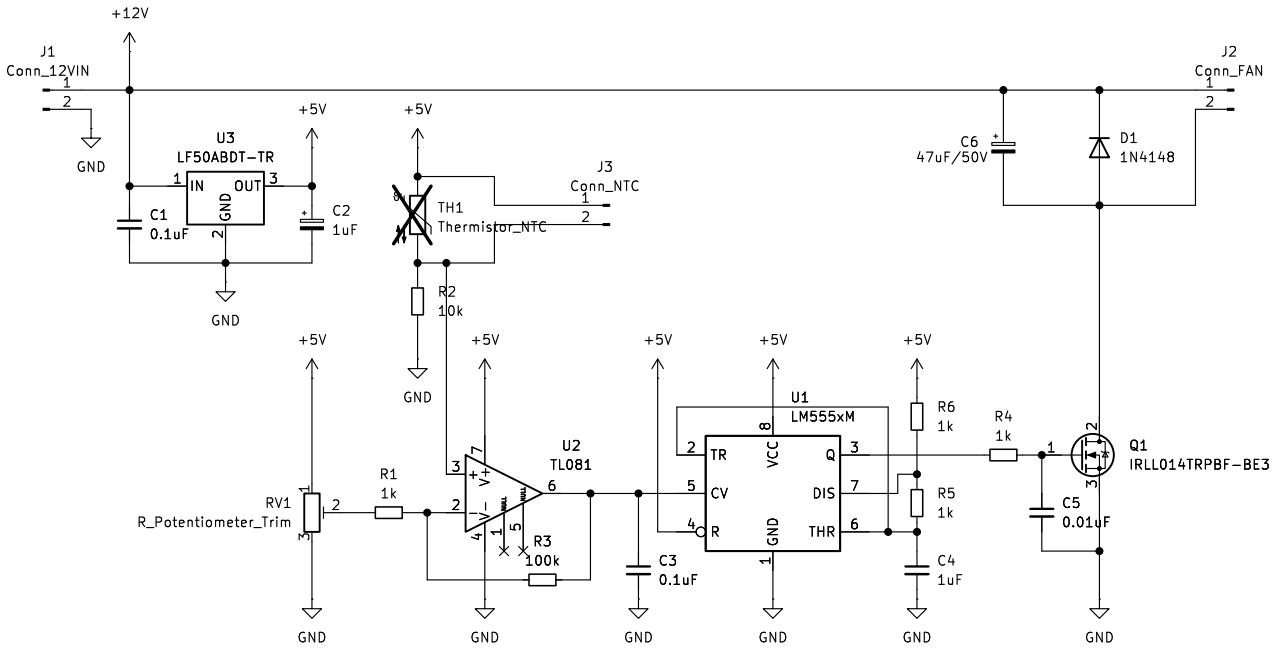

Sheet: /
File: kzpe.kicad_sch

Title:

Size: A4	Date:	**Rev:**
KiCad E.D.A. 8.0.3		Id: 1/1