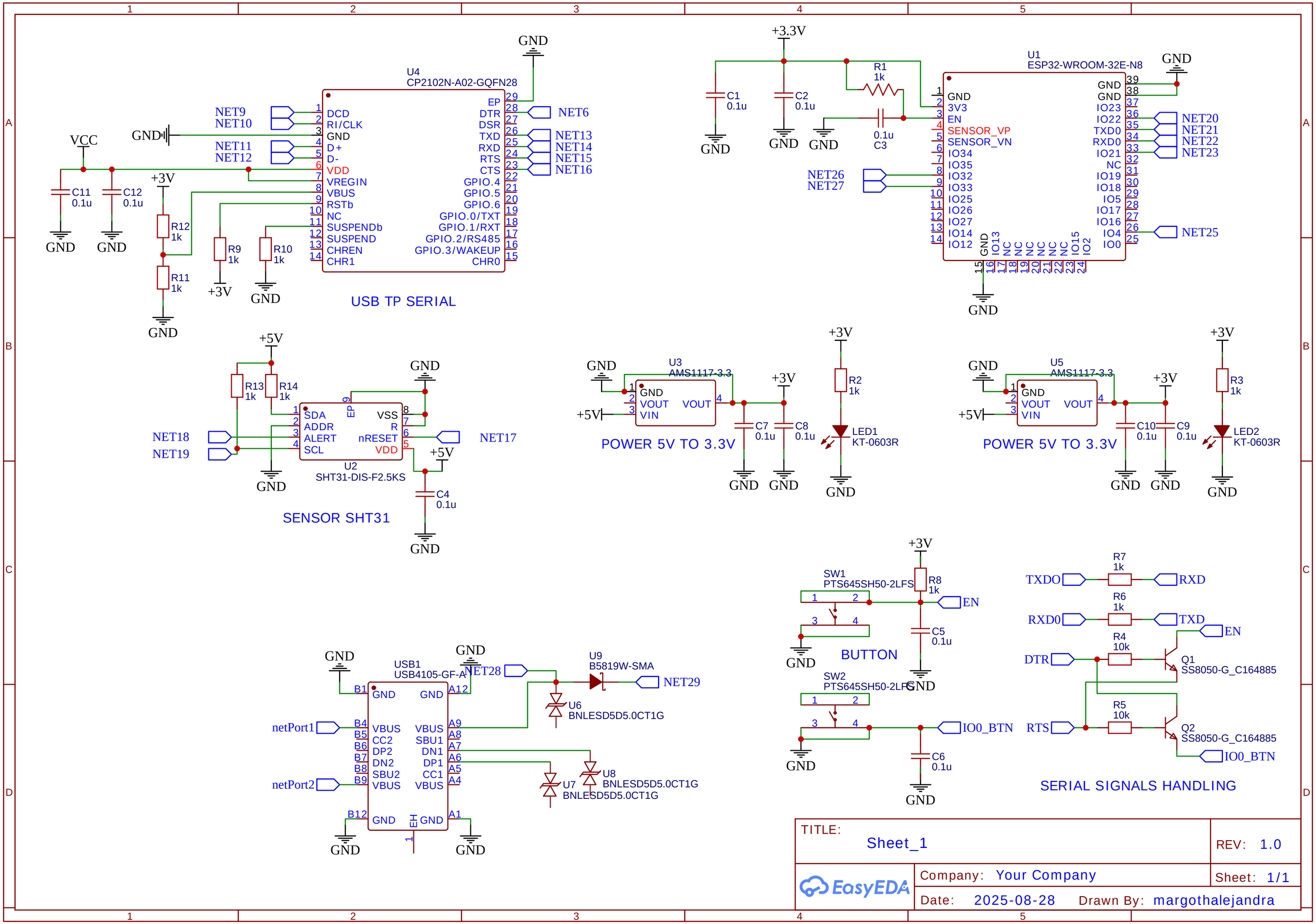
U4
CP2102N-A02-GQFN28
DCD
RI/CLK
GND
D+
D-
VDD
VREGIN
VBUS
RSTb
NC
SUSPENDb
SUSPEND
CHREN
CHR1
EP
DTR
DSR
TXD
RXD
RTS
CTS
GPIO.4
GPIO.5
GPIO.6
GPIO.0/TXT
GPIO.1/RXT
GPIO.2/RS485
GPIO.3/WAKEUP
CHR0
NET9
NET10
NET11
NET12
NET6
NET13
NET14
NET15
NET16
VCC
C11 0.1u
C12 0.1u
R12 1k
R11 1k
R9 1k
R10 1k
USB TP SERIAL
U1
ESP32-WROOM-32E-N8
3V3
EN
SENSOR_VP
SENSOR_VN
IO34
IO35
IO32
IO33
IO25
IO26
IO27
IO14
IO12
IO13
IO23
IO22
TXD0
RXD0
IO21
NC
IO19
IO18
IO5
IO17
IO16
IO4
IO0
IO15
IO2
NET20
NET21
NET22
NET23
NET25
NET26
NET27
C1 0.1u
C2 0.1u
R1 1k
C3 0.1u
+3.3V
+3V
+5V
GND
R13 1k
R14 1k
SDA
ADDR
ALERT
SCL
VSS
R
nRESET
VDD
U2
SHT31-DIS-F2.5KS
NET18
NET19
NET17
C4 0.1u
SENSOR SHT31
U3
AMS1117-3.3
VOUT
VIN
C7 0.1u
C8 0.1u
R2 1k
LED1
KT-0603R
POWER 5V TO 3.3V
U5
AMS1117-3.3
C10 0.1u
C9 0.1u
R3 1k
LED2
KT-0603R
POWER 5V TO 3.3V
SW1
PTS645SH50-2LFS
R8 1k
EN
C5 0.1u
BUTTON
SW2
PTS645SH50-2LFS
IO0_BTN
C6 0.1u
TXDO
RXD
R7 1k
RXD0
TXD
R6 1k
DTR
R4 10k
Q1
SS8050-G_C164885
RTS
R5 10k
Q2
SS8050-G_C164885
SERIAL SIGNALS HANDLING
USB1
USB4105-GF-A
B1
B4
B5
B6
B7
B8
B9
B12
A12
A9
A8
A7
A6
A5
A4
A1
VBUS
CC2
DP2
DN2
SBU2
SBU1
DN1
DP1
CC1
netPort1
netPort2
NET28
NET29
U9
B5819W-SMA
U6
BNLESD5D5.0CT1G
U7
BNLESD5D5.0CT1G
U8
BNLESD5D5.0CT1G
TITLE:
Sheet_1
REV: 1.0
Company: Your Company
Sheet: 1/1
Date: 2025-08-28
Drawn By: margothalejandra
EasyEDA