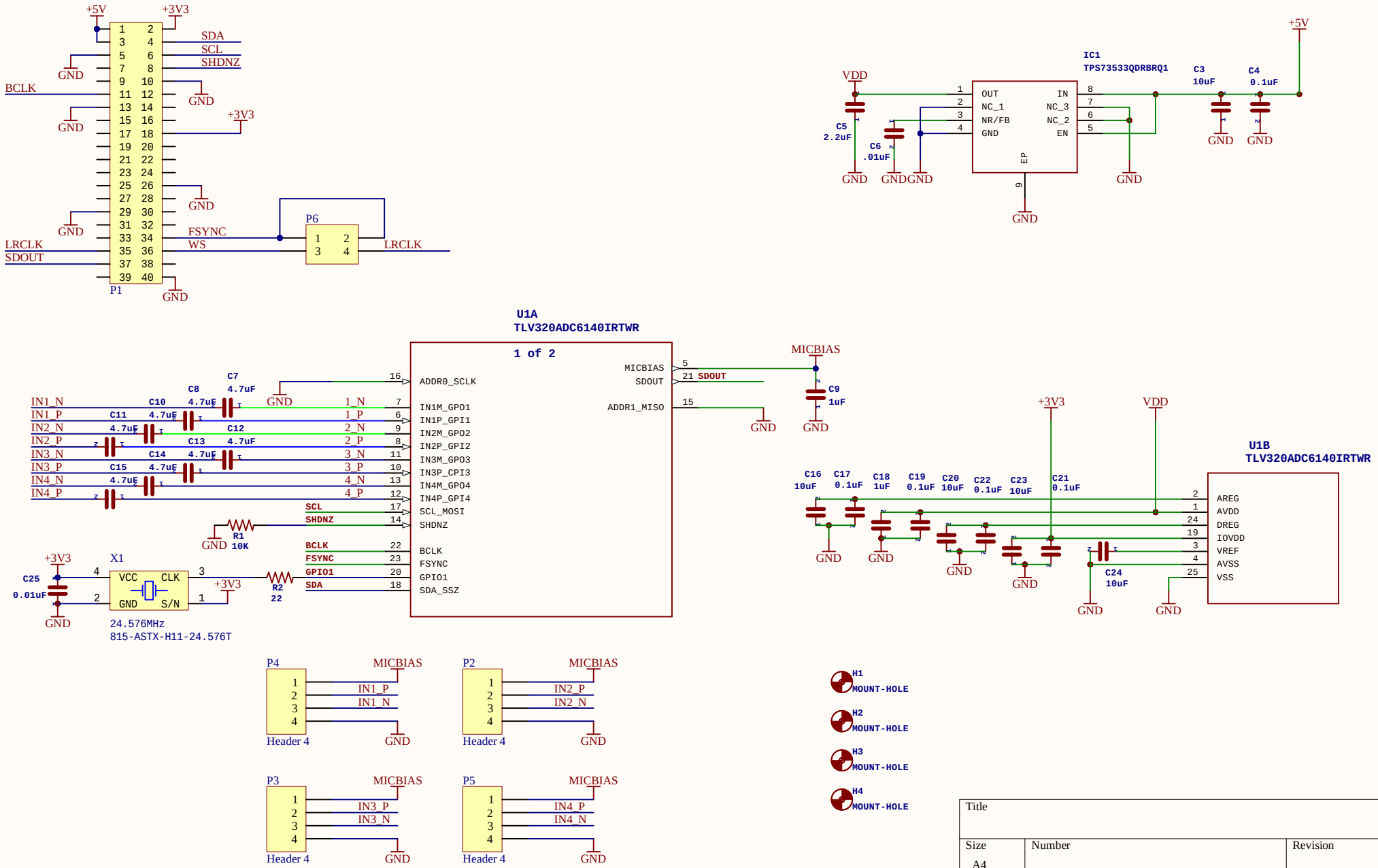

Title		
Size A4	Number	Revision
Date: 4/30/2026		Sheet of
File: E:\Proyectos\..\Ensor-4_Channels.SchDoc		Drawn By:

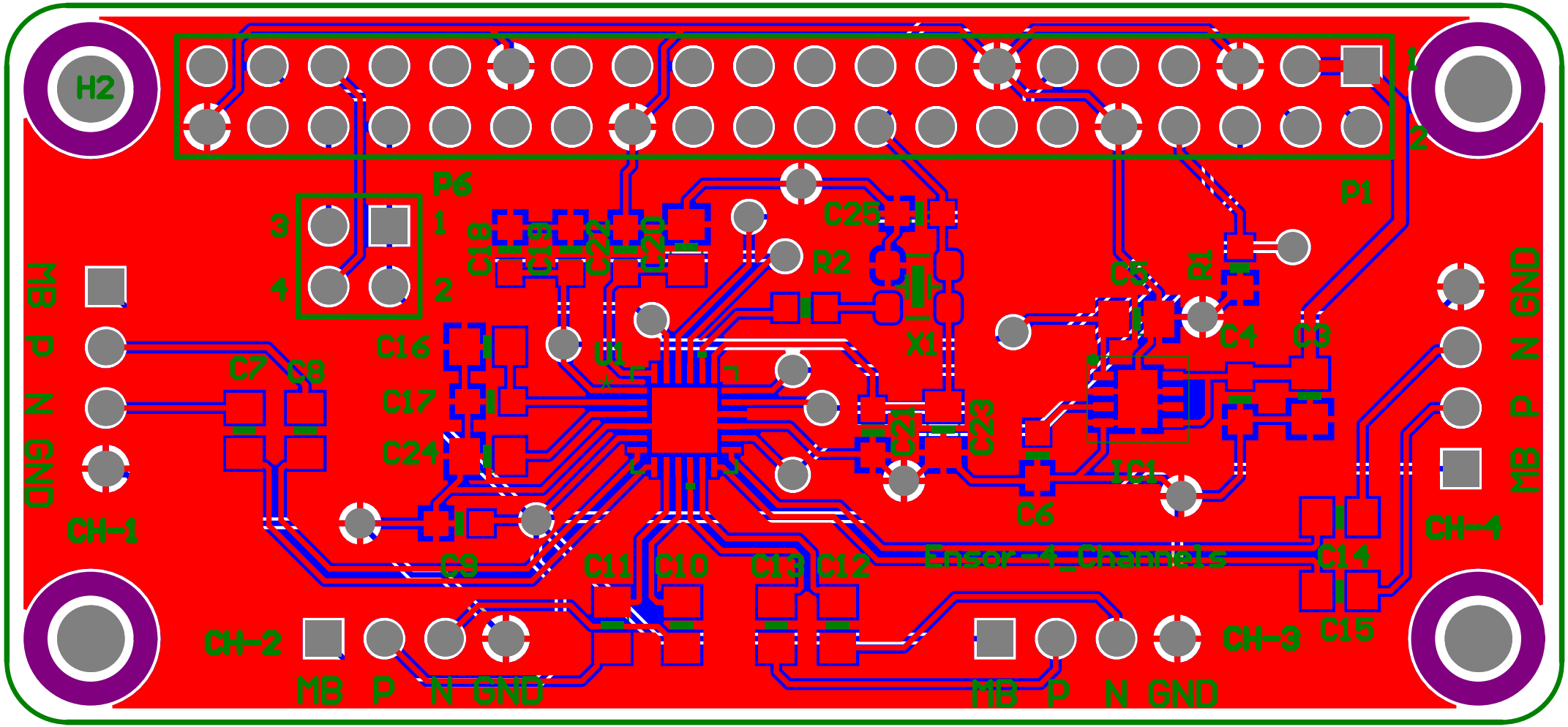
H2
P6
P1
C25
R2
X1
C5
R1
C4
C3
C7
C8
C16
C17
C24
U1
C23
C22
IC1
C6
C9
C11
C10
C13
C12
C14
C15
Ensor-4 Channels
CH-1
CH-2
CH-3
CH-4
MB
P
N
GND