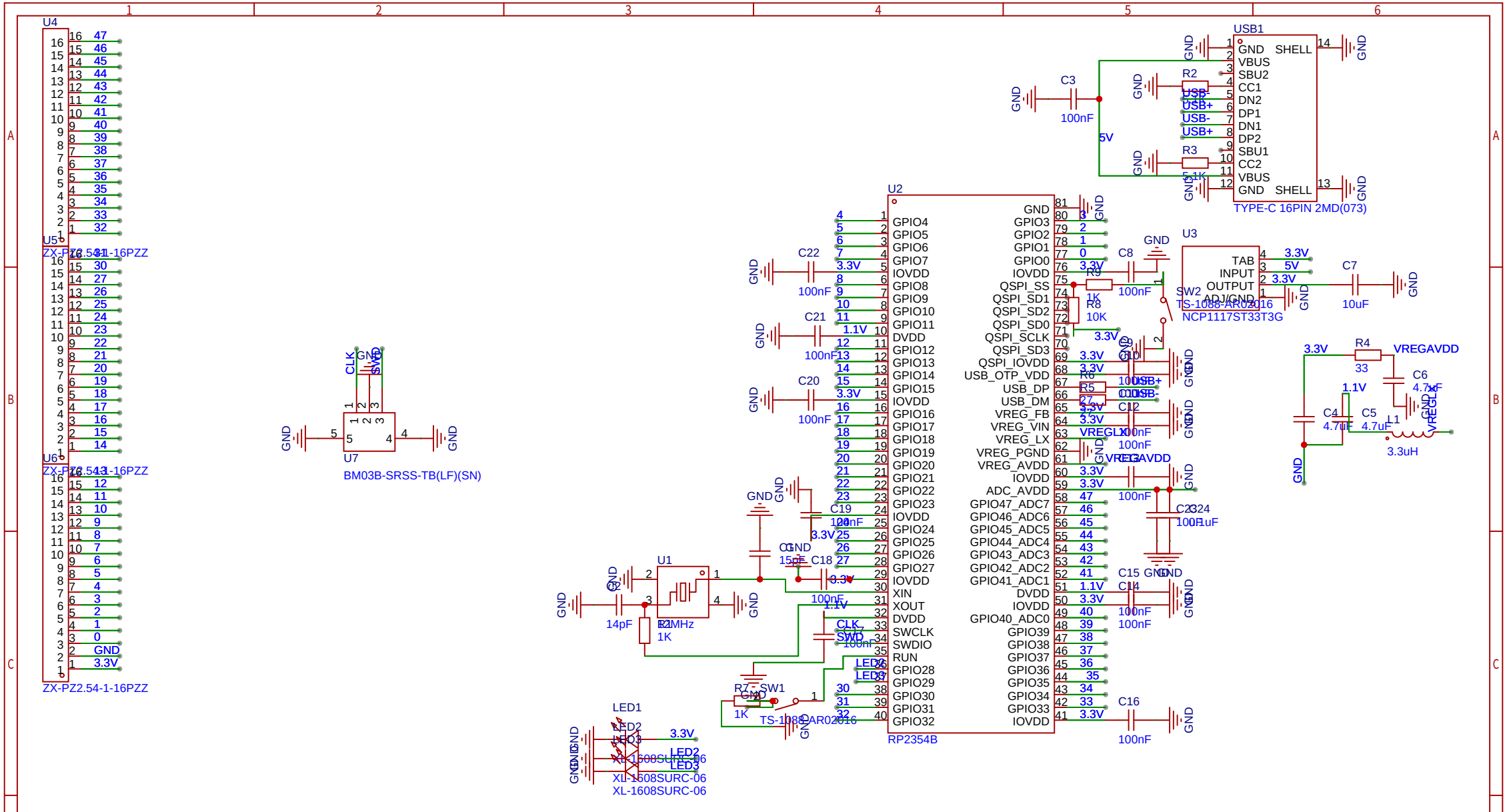

Schematic	Schematic1	Create at	2026-04-27
		Update at	2026-04-30
Board	Board1	Page	P1
Drawn			
Reviewed			
		Version	Size
		V1.0	A4

Low Taper Fade

Page 1 Total 1

EasyEDA.com