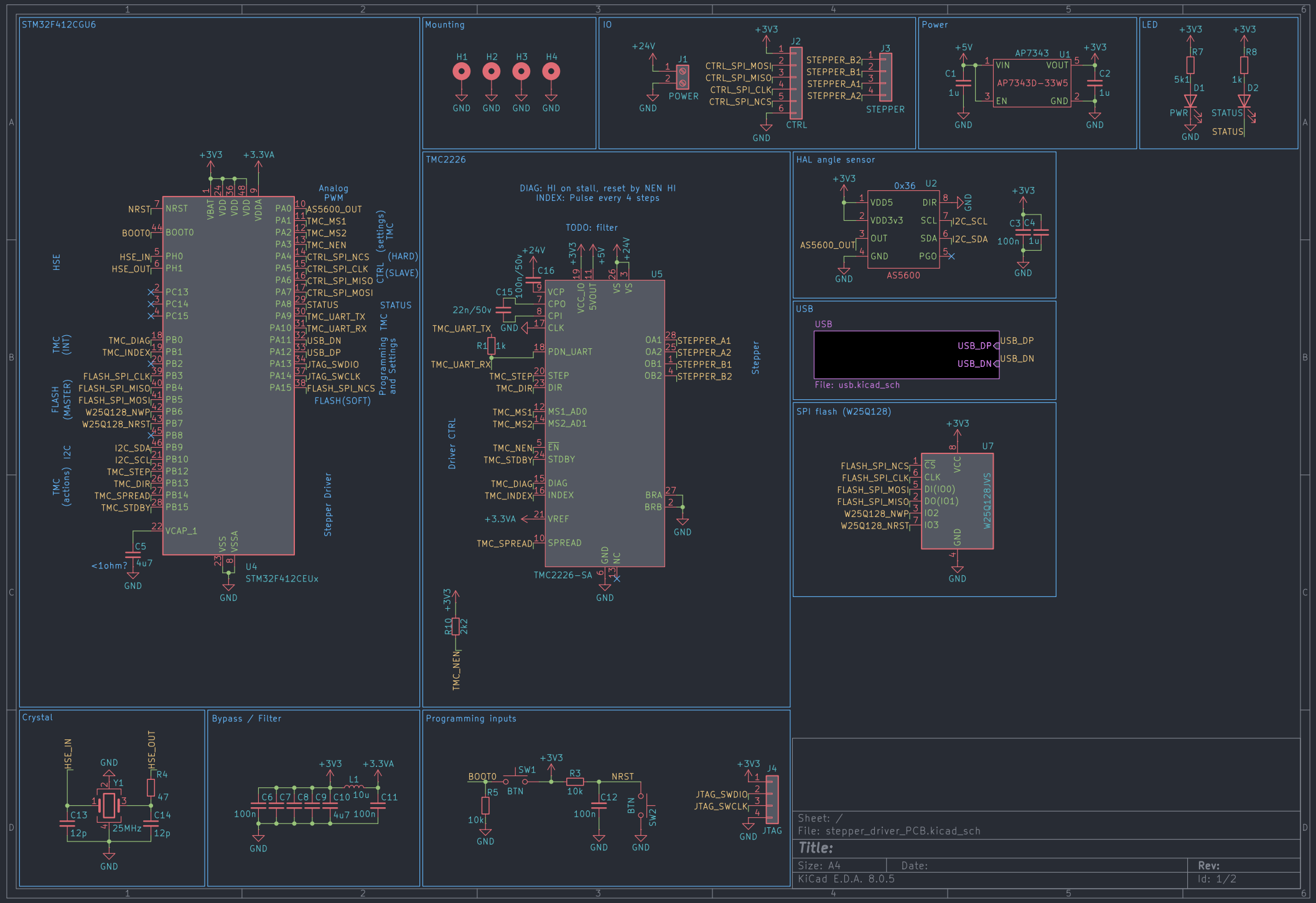
STM32F412CGU6
Mounting
H1 H2 H3 H4
GND GND GND GND
IO
+24V
J1
POWER
GND
+3V3
J2
CTRL_SPI_MOSI
CTRL_SPI_MISO
CTRL_SPI_CLK
CTRL_SPI_NCS
CTRL
STEPPER_B2
STEPPER_B1
STEPPER_A1
STEPPER_A2
J3
STEPPER
Power
+5V
C1
1u
AP7343
U1
VIN
VOUT
AP7343D-33W5
EN
GND
C2
1u
LED
+3V3
R7
5k1
D1
PWR
R8
1k
D2
STATUS
TMC2226
DIAG: HI on stall, reset by NEN HI
INDEX: Pulse every 4 steps
TODO: filter
+24V
C16
100n/50v
C15
22n/50v
TMC_UART_TX
R1
1k
TMC_UART_RX
+3V3
VCC_IO
5VOUT
+5V
VS
U5
VCP
CPO
CPI
CLK
PDN_UART
STEP
DIR
MS1_AD0
MS2_AD1
EN
STDBY
DIAG
INDEX
VREF
SPREAD
GND
NC
OA1
OA2
OB1
OB2
BRA
BRB
STEPPER_A1
STEPPER_A2
STEPPER_B1
STEPPER_B2
Stepper
Driver CTRL
TMC_STEP
TMC_DIR
TMC_MS1
TMC_MS2
TMC_NEN
TMC_STDBY
TMC_DIAG
TMC_INDEX
+3.3VA
TMC_SPREAD
TMC2226-SA
R10
2k2
TMC_NEN
HAL angle sensor
+3V3
0x36
U2
VDD5
VDD3v3
OUT
GND
AS5600_OUT
DIR
SCL
SDA
PGO
I2C_SCL
I2C_SDA
AS5600
C3
C4
100n
1u
USB
USB_DP
USB_DN
File: usb.kicad_sch
SPI flash (W25Q128)
U7
CS
CLK
DI(IO0)
DO(IO1)
IO2
IO3
VCC
W25Q128JVS
FLASH_SPI_NCS
FLASH_SPI_CLK
FLASH_SPI_MOSI
FLASH_SPI_MISO
W25Q128_NWP
W25Q128_NRST
+3.3VA
VBAT
VDD
VDDA
NRST
BOOT0
PH0
PH1
PC13
PC14
PC15
PB0
PB1
PB2
PB3
PB4
PB5
PB6
PB7
PB8
PB9
PB10
PB12
PB13
PB14
PB15
VCAP_1
VSS
VSSA
PA0
PA1
PA2
PA3
PA4
PA5
PA6
PA7
PA8
PA9
PA10
PA11
PA12
PA13
PA14
PA15
AS5600_OUT
TMC_MS1
TMC_MS2
TMC_NEN
CTRL_SPI_NCS
CTRL_SPI_CLK
CTRL_SPI_MISO
CTRL_SPI_MOSI
STATUS
TMC_UART_TX
TMC_UART_RX
USB_DN
USB_DP
JTAG_SWDIO
JTAG_SWCLK
FLASH_SPI_NCS
HSE
HSE_IN
HSE_OUT
TMC (INT)
TMC_DIAG
TMC_INDEX
FLASH (MASTER)
I2C
TMC (actions)
TMC_STEP
TMC_DIR
TMC_SPREAD
TMC_STDBY
Analog PWM
TMC (settings)
CTRL (HARD)
CTRL (SLAVE)
STATUS
Programming and Settings
FLASH(SOFT)
Stepper Driver
C5
4u7
<1ohm?
U4
STM32F412CEUx
Crystal
HSE_IN
HSE_OUT
Y1
25MHz
C13
12p
C14
12p
R4
47
Bypass / Filter
L1
10u
C6
C7
C8
C9
C10
C11
100n
4u7
Programming inputs
BOOT0
SW1
BTN
R5
10k
R3
10k
NRST
C12
100n
SW2
J4
JTAG
JTAG_SWDIO
JTAG_SWCLK
Sheet: /
File: stepper_driver_PCB.kicad_sch
Title:
Size: A4
Date:
Rev:
KiCad E.D.A. 8.0.5
Id: 1/2

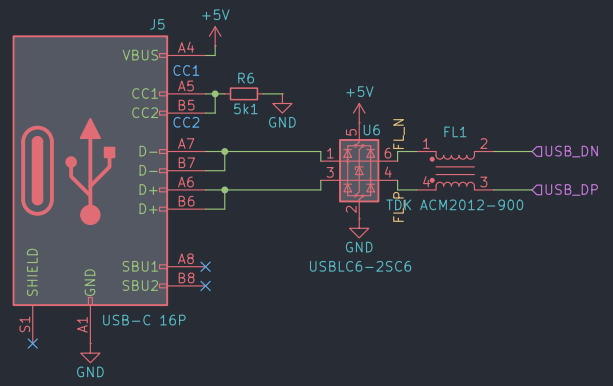

Sheet: /USB/
File: usb.kicad_sch

Title:

Size: A4	Date:	Rev:
KiCad E.D.A. 8.0.5		Id: 2/2