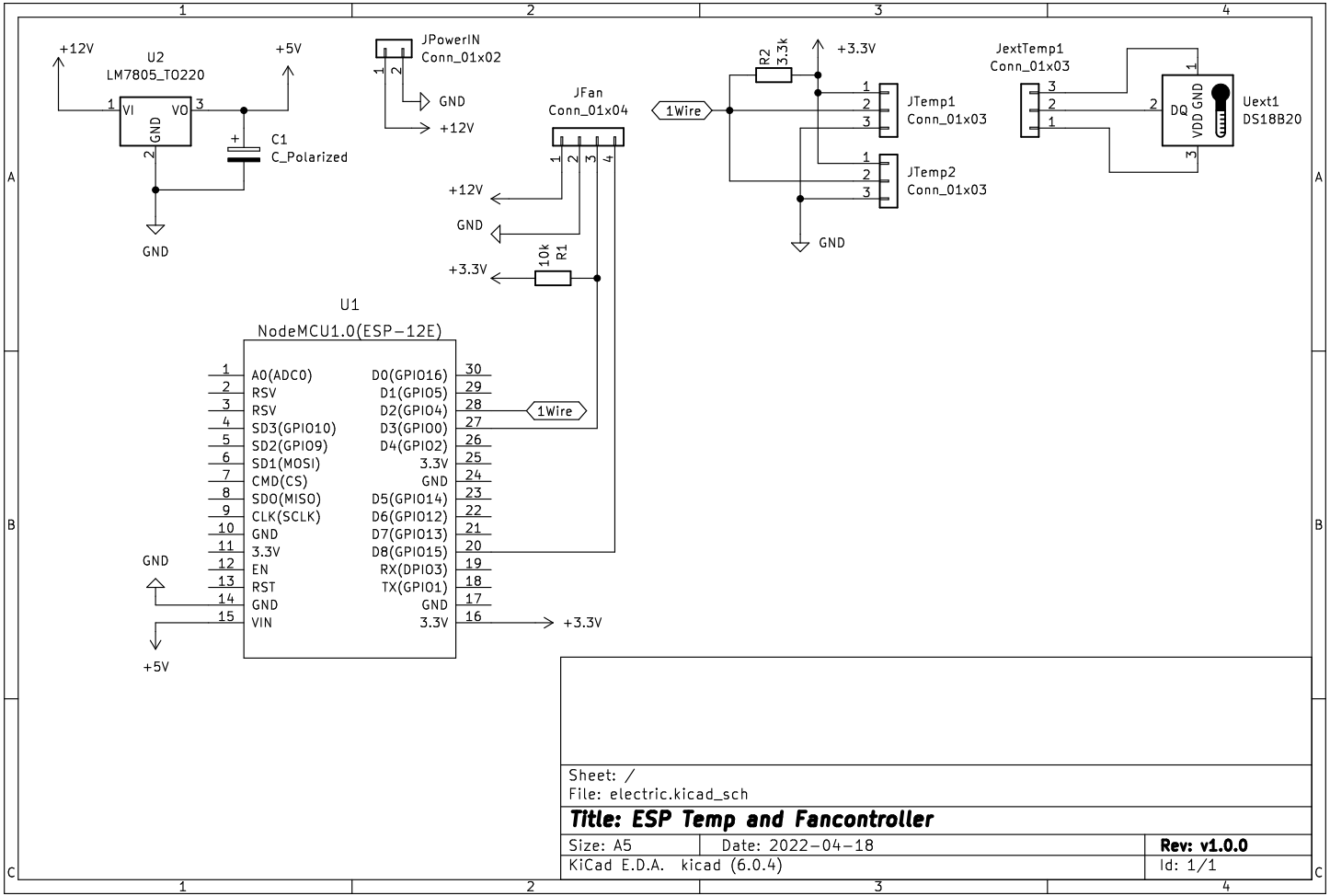

Sheet: /
File: electric.kicad_sch

Title: ESP Temp and Fancontroller

Size: A5	Date: 2022-04-18	**Rev: v1.0.0**
KiCad E.D.A. kicad (6.0.4)		Id: 1/1