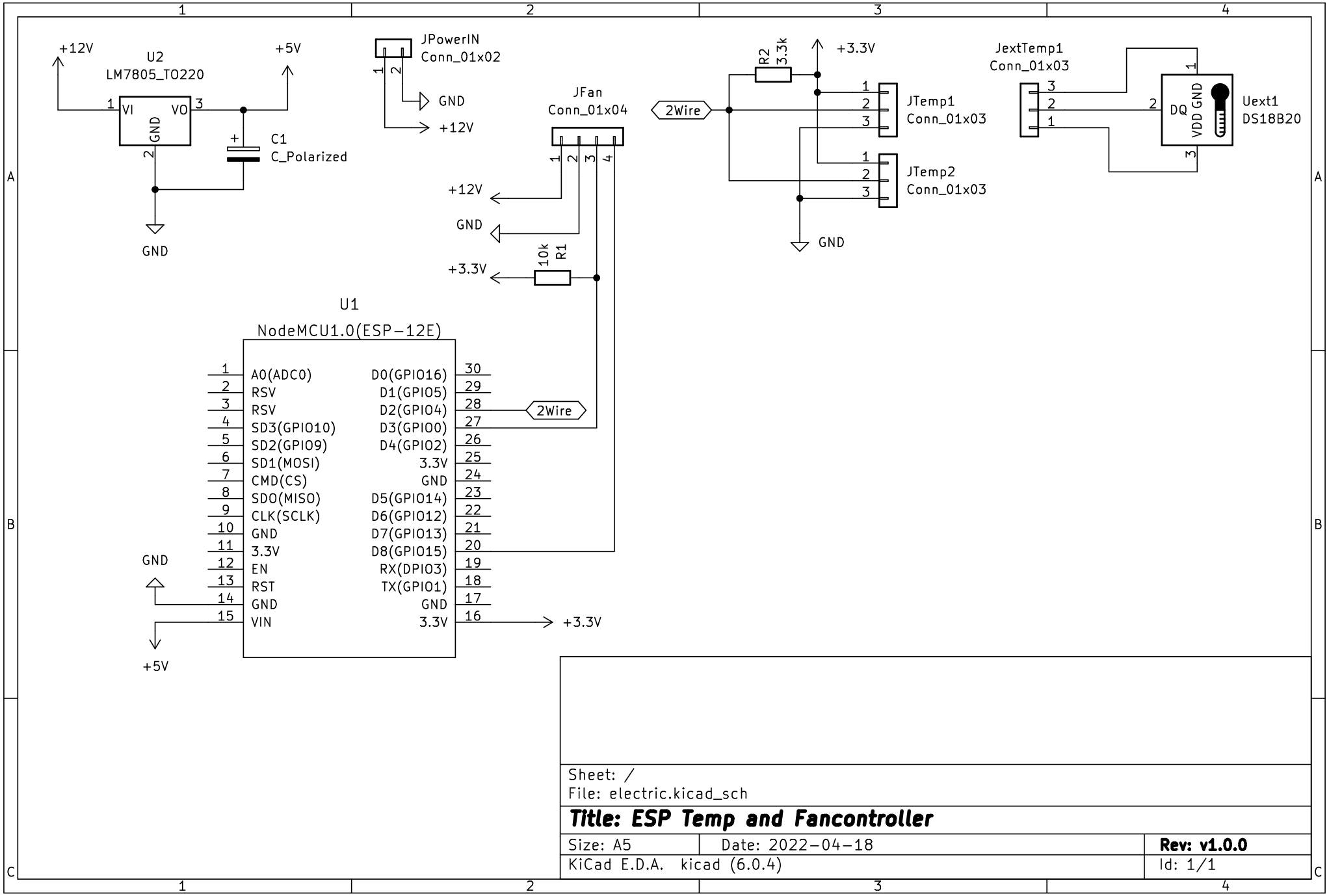


Sheet: /
File: electric.kicad_sch

**Title: ESP Temp and Fancontroller**

| | | |
|---|---|---|
| Size: A5 | Date: 2022-04-18 | **Rev: v1.0.0** |
| KiCad E.D.A. kicad (6.0.4) | | Id: 1/1 |