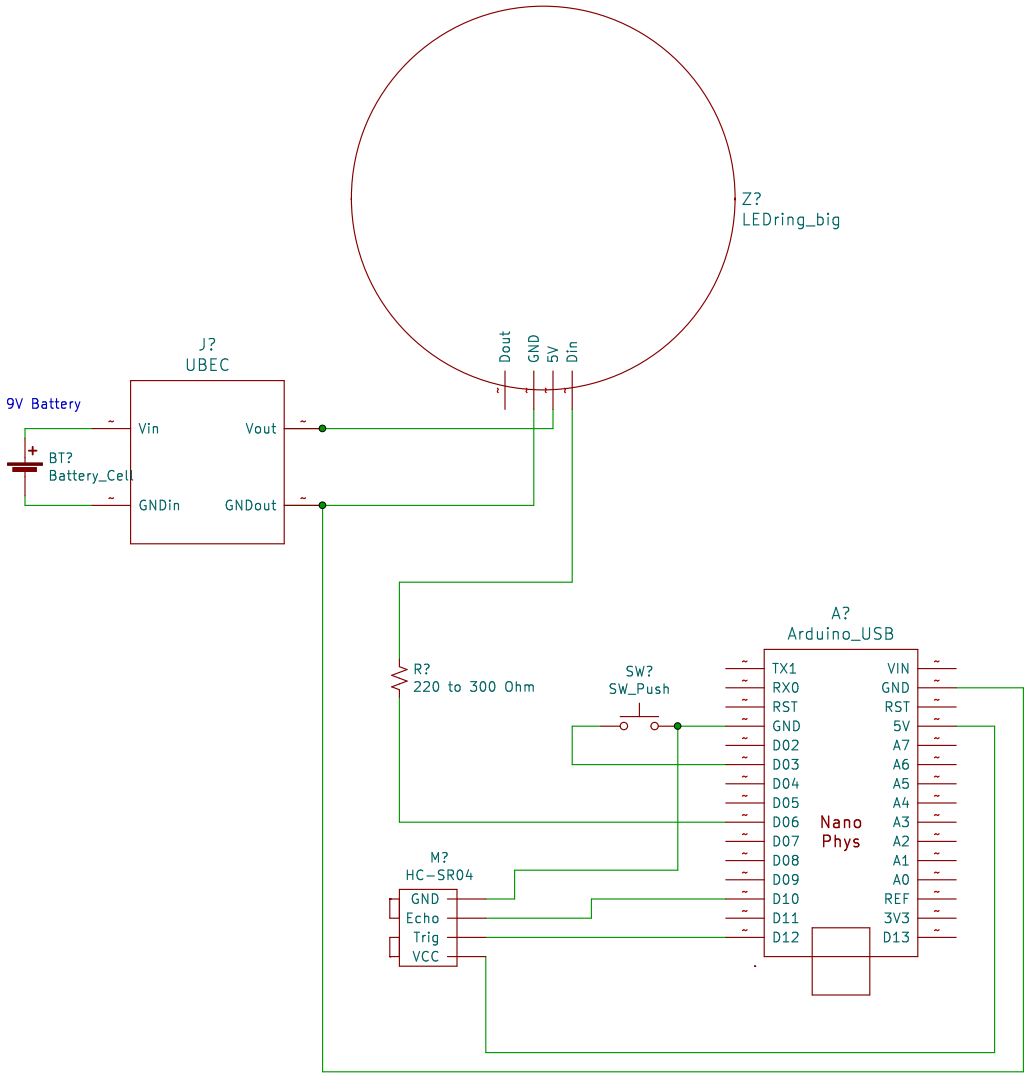

NOTE: Chips & Modules shown top view, notch at top

Author: https://github.com/Mark-MDO47/ArduinoClass/tree/master

Sheet: /

File: 03_ExtraFun.kicad_sch

Title: 03 Sonar Range Detector – Extra Fun

Size: USLetter	Date: 2023-04-22	**Rev:**
KiCad E.D.A. kicad 7.0.2		Id: 1/1