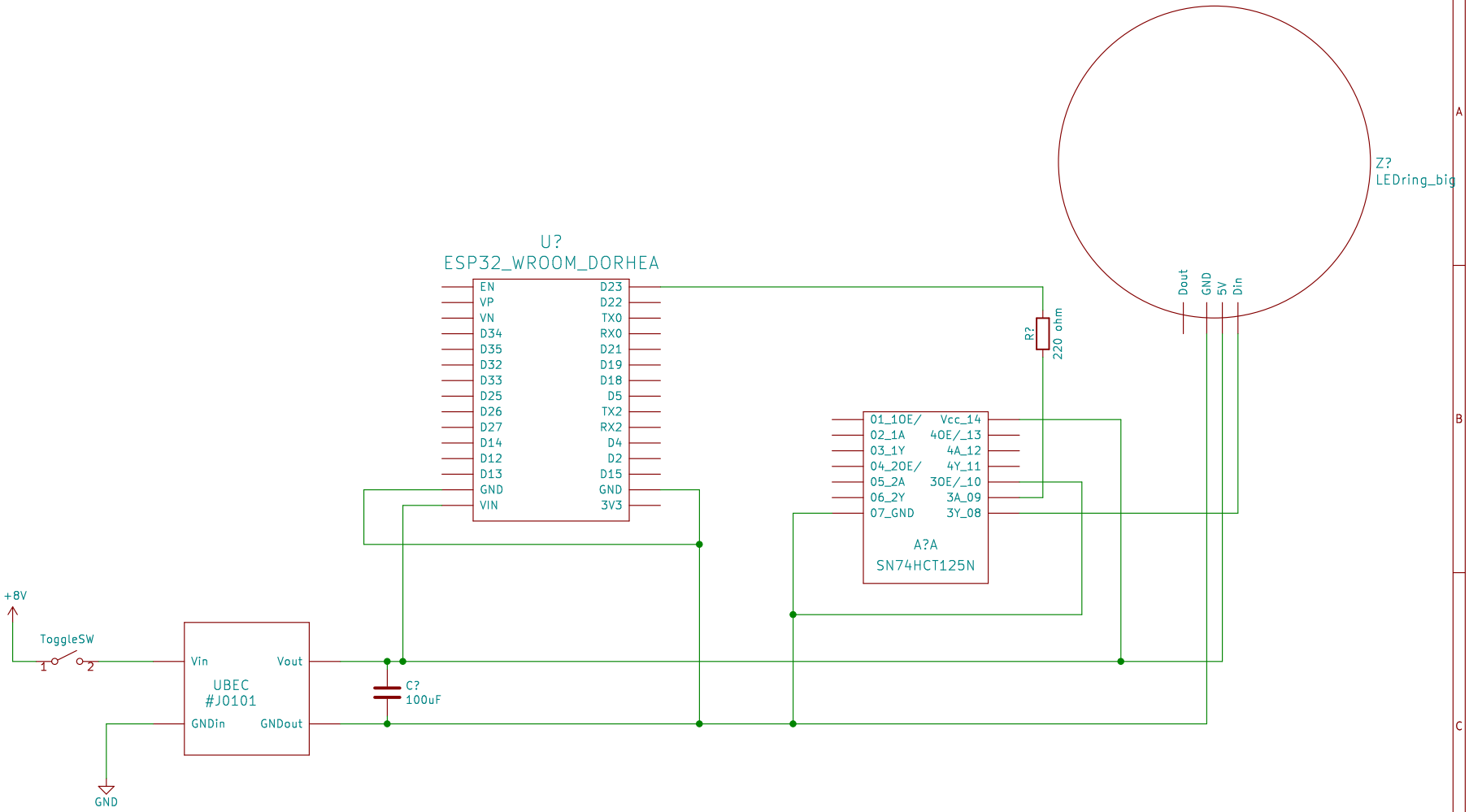

Sheet: /
File: ESP32Clock.sch

Title: ESP32 Clock

Size: A	Date: 2020-11-07	Rev: ---
KiCad E.D.A. kicad (5.1.5)-3		Id: 1/1