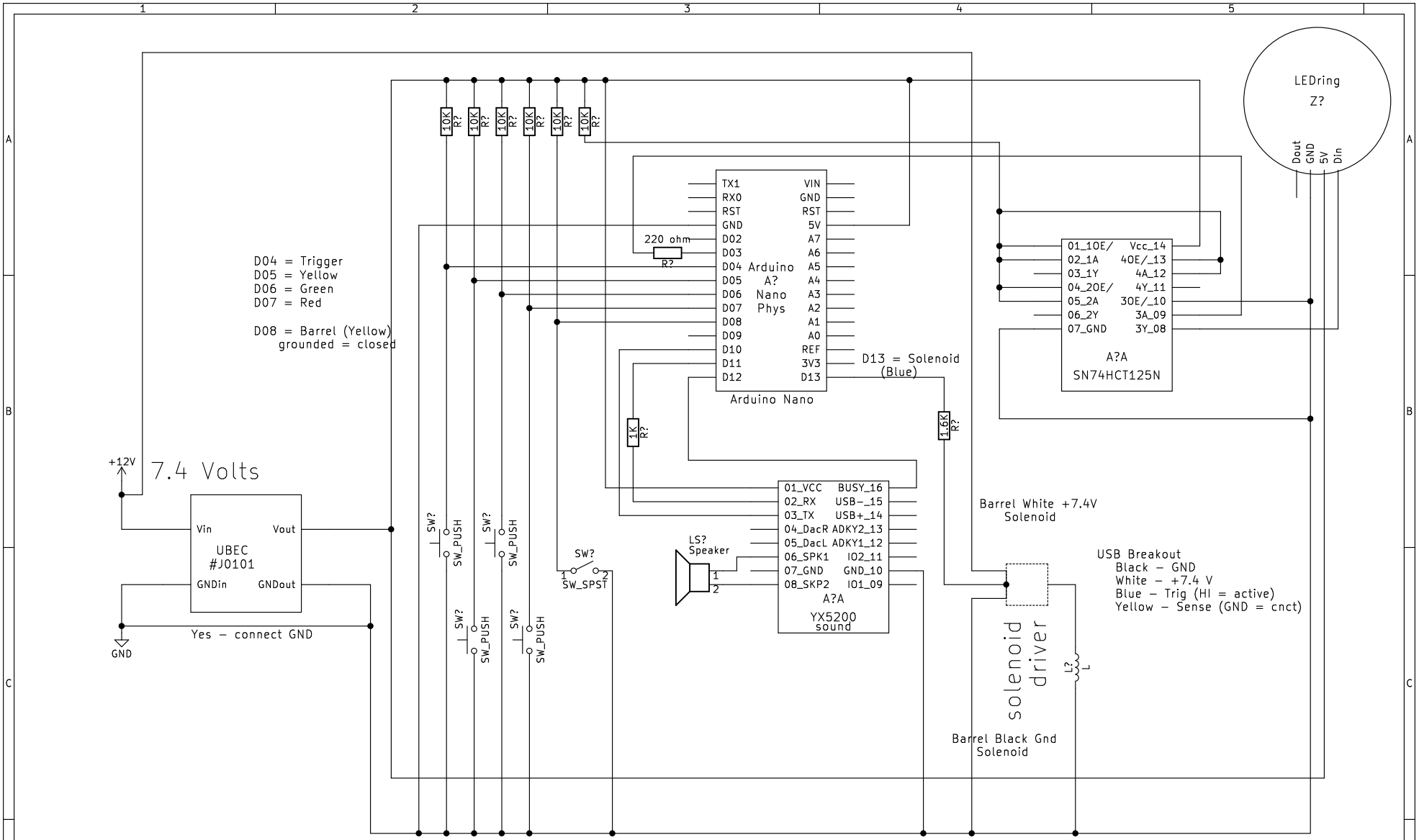

Sheet: RubberBandWiring

File: RubberBandWiring.sch

Sheet: /		
File: RubberBandGun.sch		
Title: FOOF Rubber Band Gun		
Size: A	Date: 2020-03-14	**Rev: ---**
KiCad E.D.A. kicad (5.1.5)-3		Id: 1/2