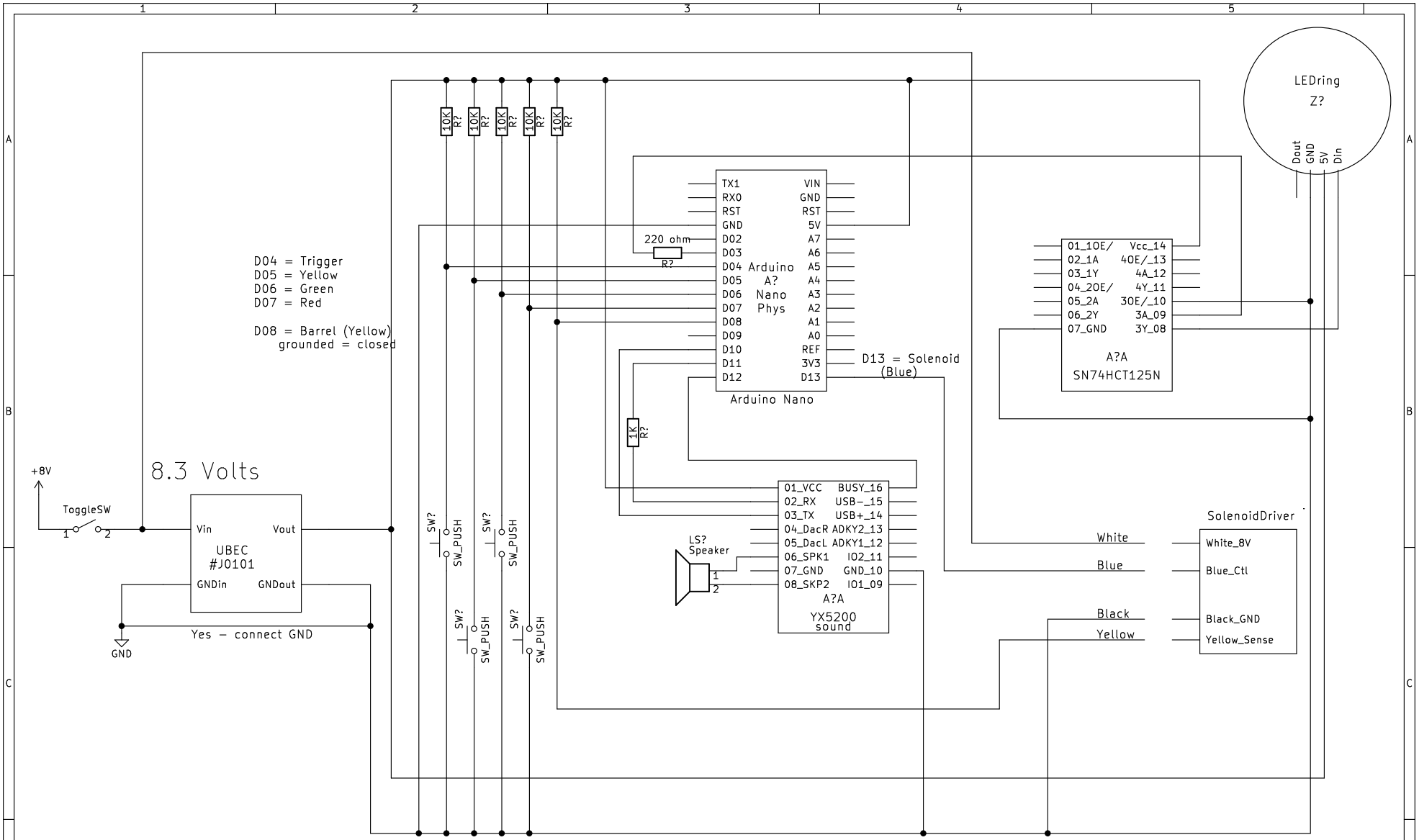

Sheet: /
File: RubberBandGun.sch

Title: FOOF Rubber Band Gun

Size: A	Date: 2020-07-13	Rev: ---
KiCad E.D.A. kicad (5.1.5)-3		Id: 1/1