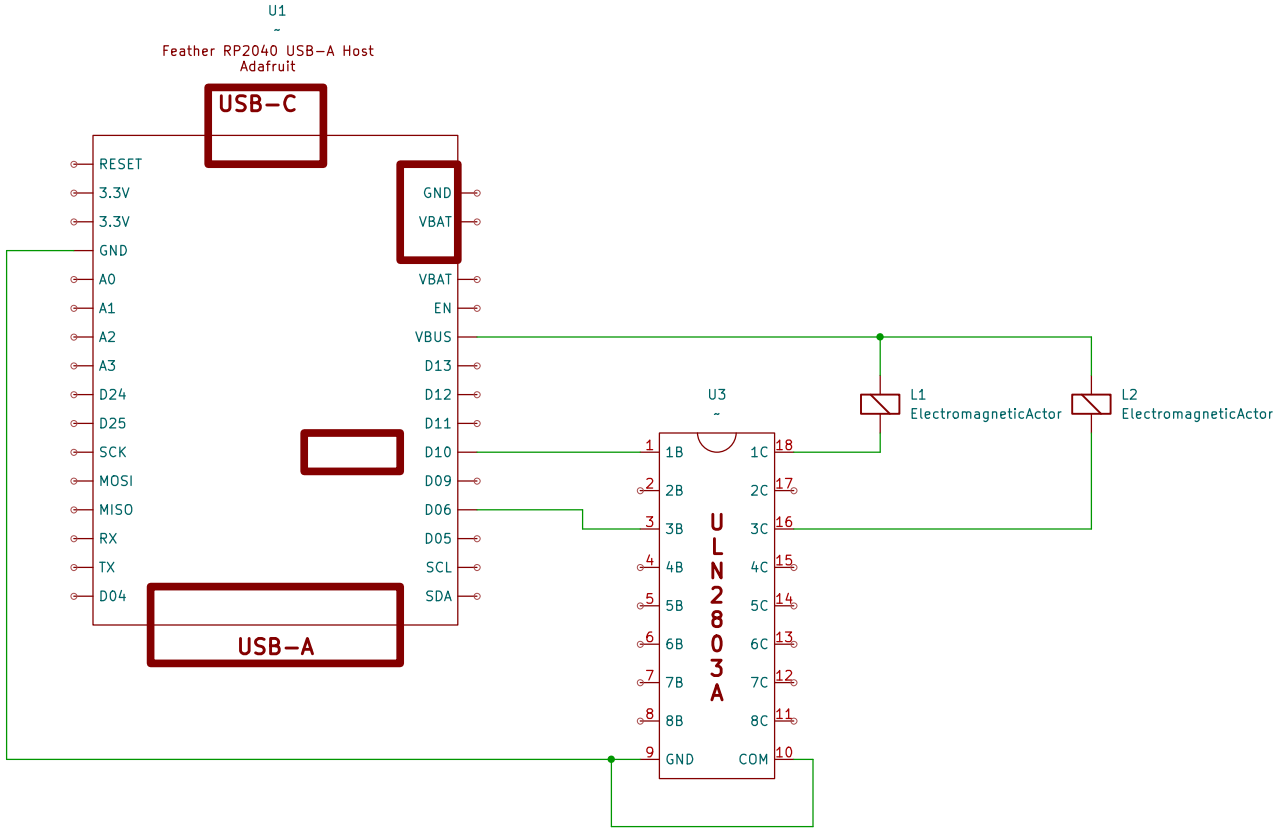

https://github.com/Mark-MDO47

Sheet: /

File: mdoNotATypeWriter.kicad_sch

Title: mdoNotATypeWriter

Size: USLetter	Date: 2025-07-31	Rev: Rev 0.9
KiCad E.D.A. 9.0.3		Id: 1/2