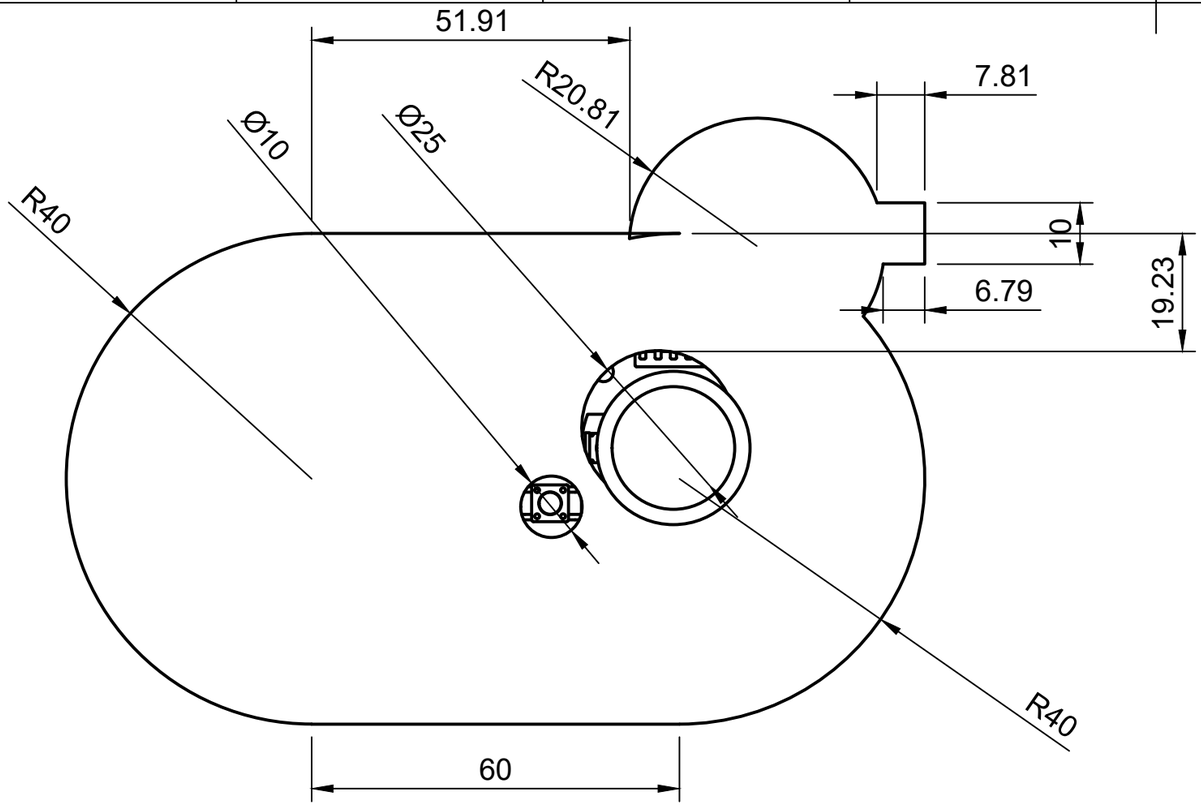

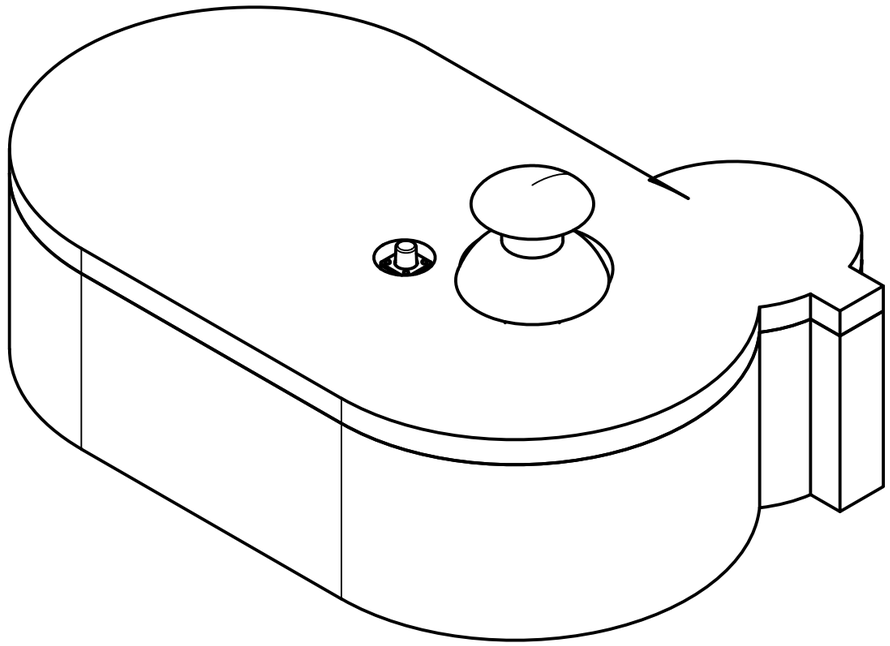

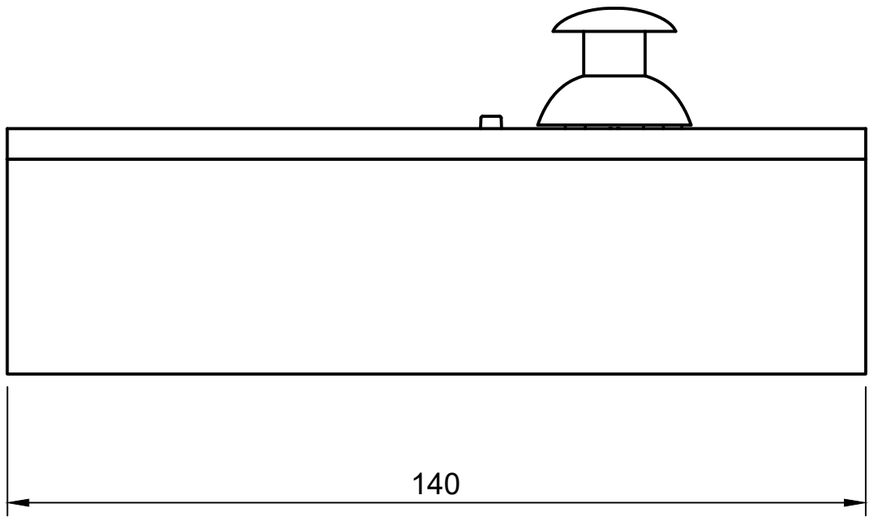

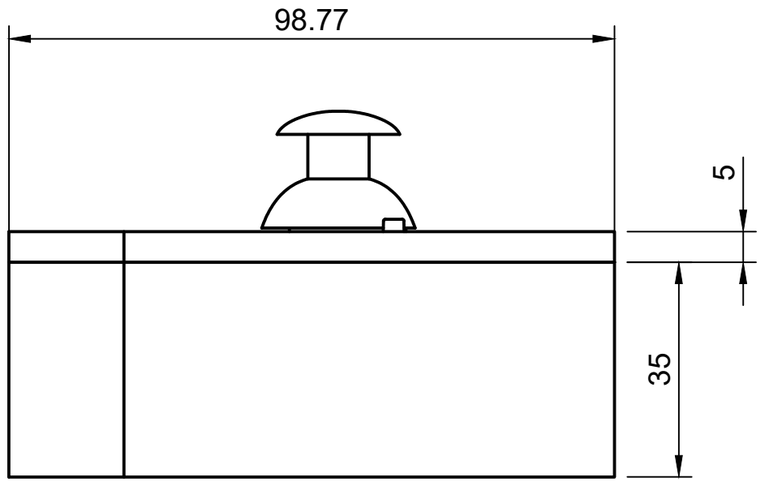

Dept.	Technical reference	Created by Mark Astilean Rist 13/12/2022	Approved by
		Document type	Document status
		Title Exam Duck Controller	DWG No.
			Rev. / Date of issue / Sheet 1/1