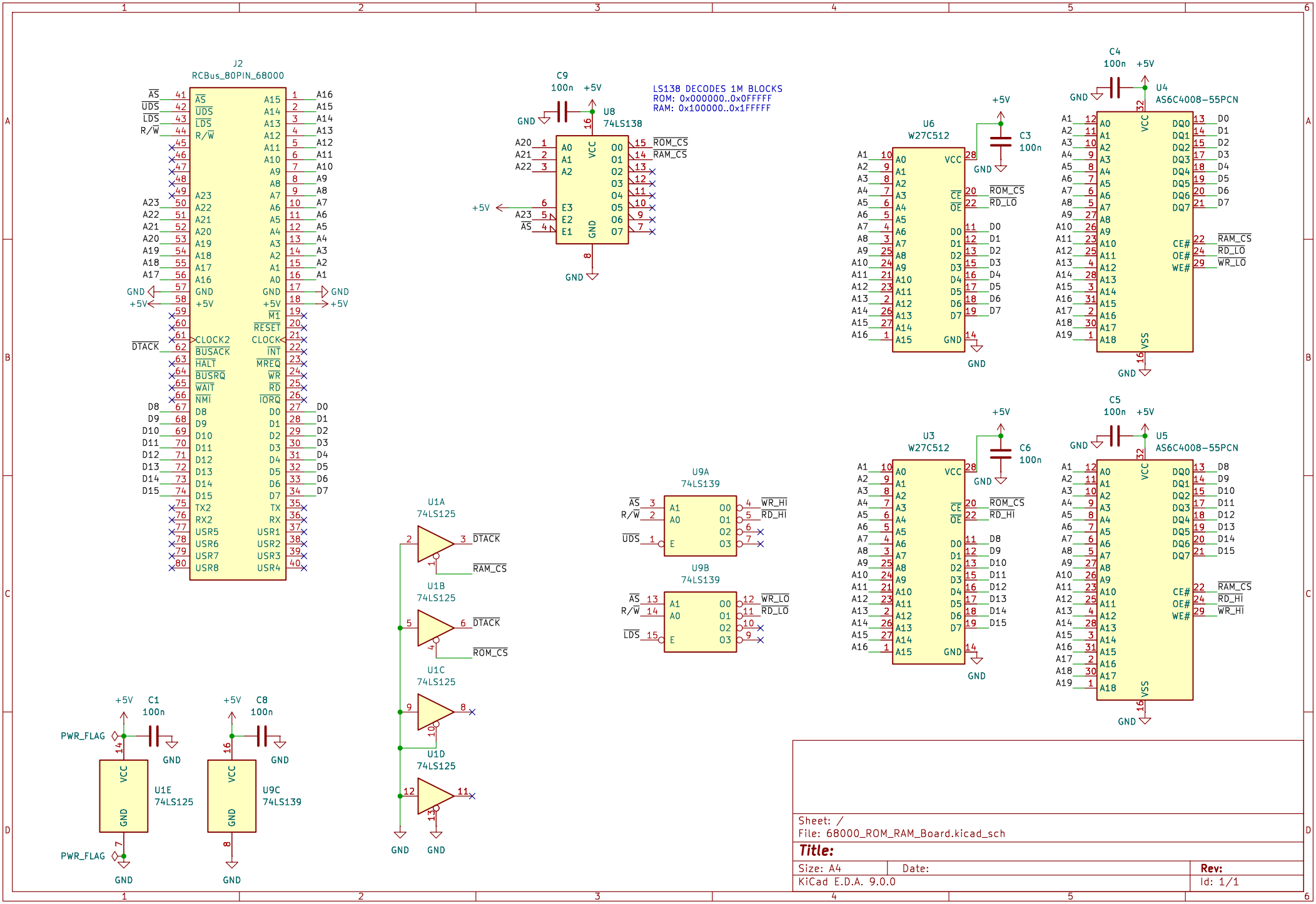
J2
RCBus_80PIN_68000
C9
100n
+5V
GND
U8
74LS138
LS138 DECODES 1M BLOCKS
ROM: 0x000000..0x0FFFFF
RAM: 0x100000..0x1FFFFF
ROM_CS
RAM_CS
U6
W27C512
C3
100n
U4
AS6C4008-55PCN
C4
100n
U3
W27C512
C6
100n
U5
AS6C4008-55PCN
C5
100n
U9A
74LS139
U9B
74LS139
U1A
74LS125
U1B
74LS125
U1C
74LS125
U1D
74LS125
U1E
74LS125
U9C
74LS139
C1
100n
C8
100n
PWR_FLAG
DTACK
WR_HI
RD_HI
WR_LO
RD_LO
Sheet: /
File: 68000_ROM_RAM_Board.kicad_sch
Title:
Size: A4
Date:
Rev:
KiCad E.D.A. 9.0.0
Id: 1/1