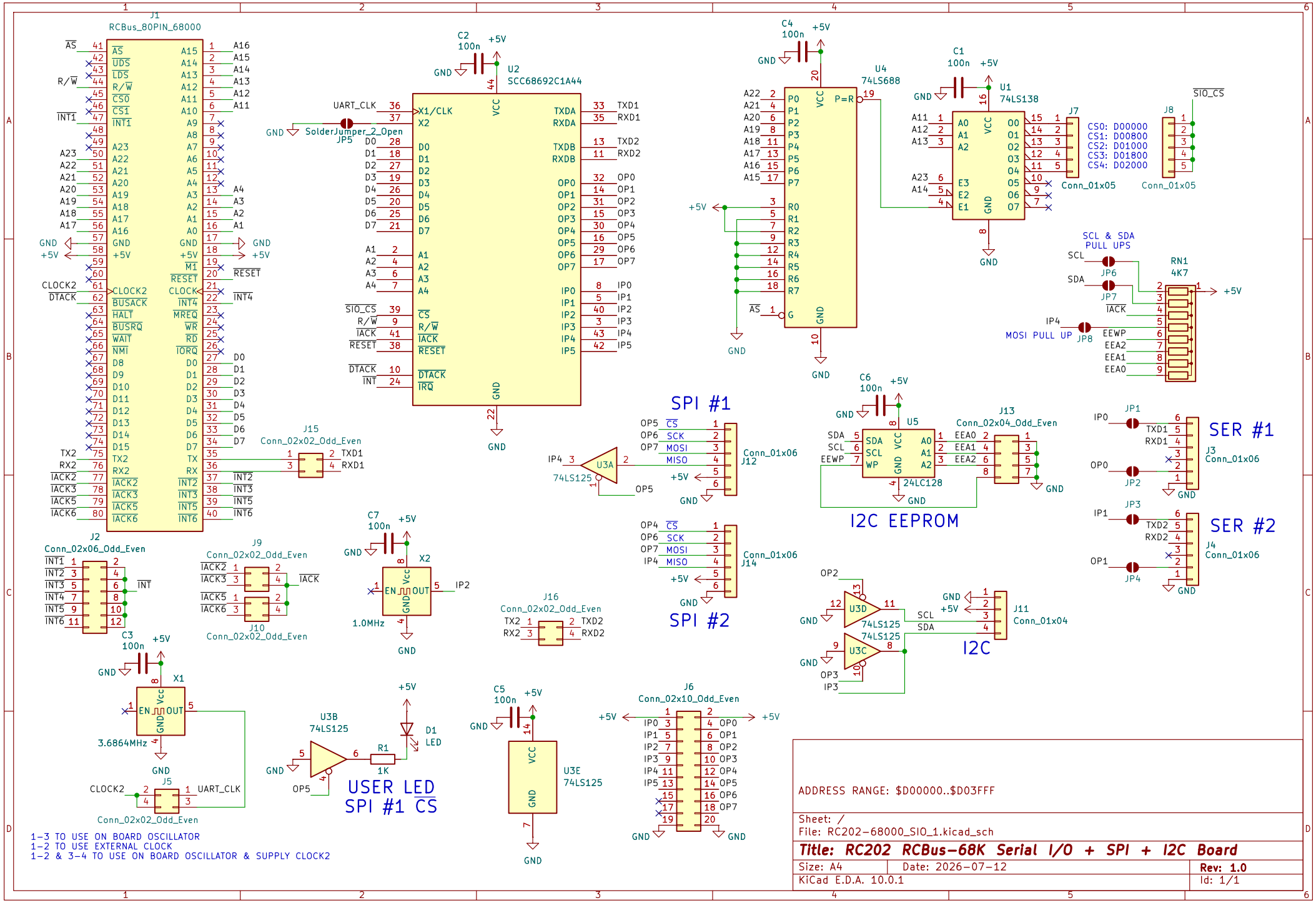
J1
RCBus_80PIN_68000
U2
SCC68692C1A44
U4
74LS688
U1
74LS138
J7
Conn_01x05
J8
Conn_01x05
CS0: D00000
CS1: D00800
CS2: D01000
CS3: D01800
CS4: D02000
SIO_CS
SolderJumper_2_Open
JP5
SCL & SDA
PULL UPS
RN1
4K7
MOSI PULL UP
JP6
JP7
JP8
SPI #1
SPI #2
U3A
74LS125
J12
Conn_01x06
J14
Conn_01x06
U5
24LC128
J13
Conn_02x04_Odd_Even
I2C EEPROM
SER #1
SER #2
J3
Conn_01x06
J4
Conn_01x06
J15
Conn_02x02_Odd_Even
J2
Conn_02x06_Odd_Even
J9
Conn_02x02_Odd_Even
J10
Conn_02x02_Odd_Even
X2
1.0MHz
J16
Conn_02x02_Odd_Even
U3D
U3C
74LS125
J11
Conn_01x04
I2C
X1
3.6864MHz
J5
Conn_02x02_Odd_Even
U3B
74LS125
R1
1K
D1
LED
USER LED
SPI #1 CS
U3E
74LS125
J6
Conn_02x10_Odd_Even
1-3 TO USE ON BOARD OSCILLATOR
1-2 TO USE EXTERNAL CLOCK
1-2 & 3-4 TO USE ON BOARD OSCILLATOR & SUPPLY CLOCK2
ADDRESS RANGE: $D00000..$D03FFF
Sheet: /
File: RC202-68000_SIO_1.kicad_sch
Title: RC202 RCBus-68K Serial I/O + SPI + I2C Board
Size: A4
Date: 2026-07-12
Rev: 1.0
KiCad E.D.A. 10.0.1
Id: 1/1