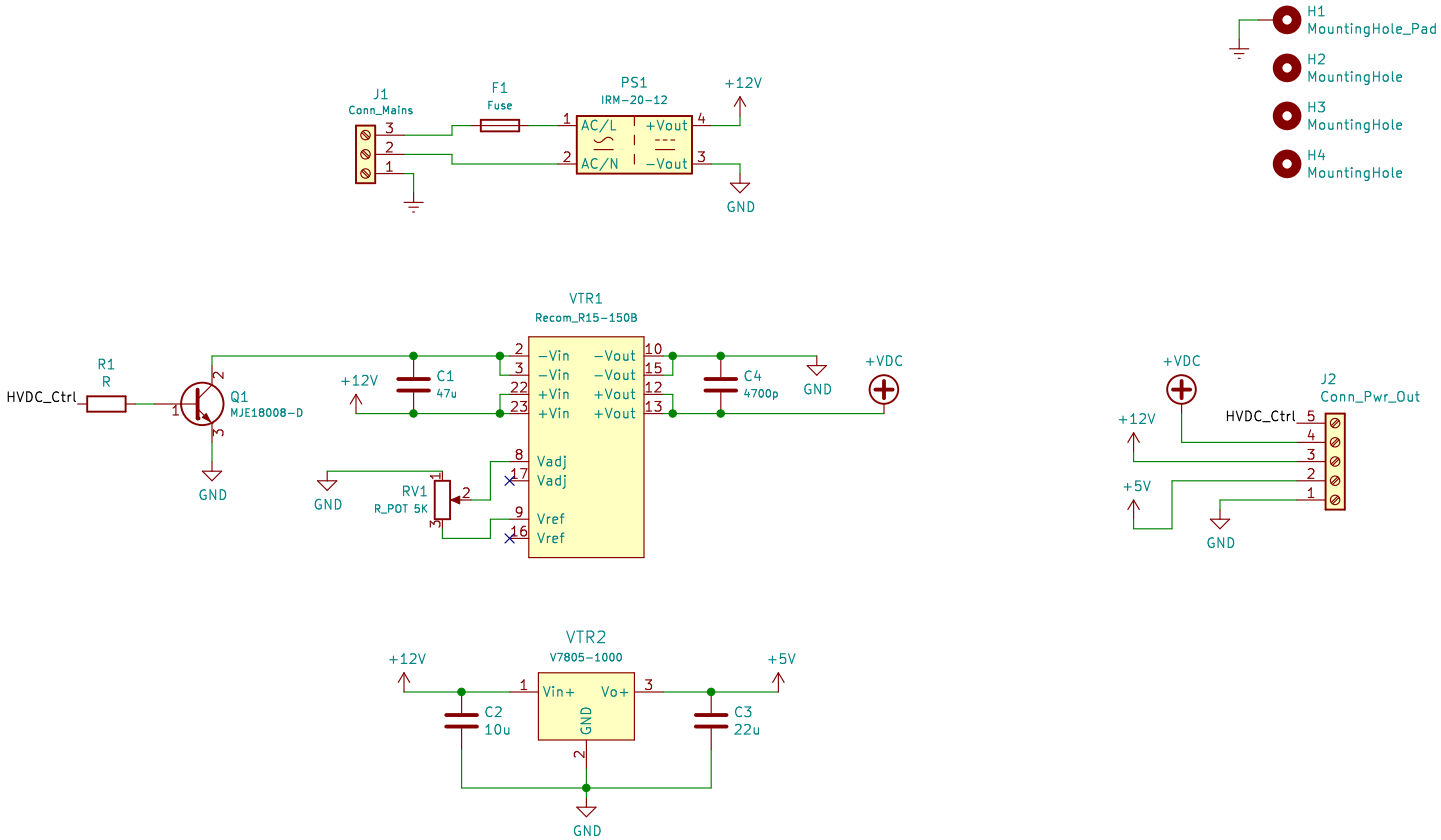

www.MarkFromSales.com

Sheet: /

File: Nixie-PSU.sch

Title: Nixie Power Supply Unit

Size: USLetter	Date: 2019-01-28	Rev: 0.2
KiCad E.D.A. kicad (5.0.2)-1		Id: 1/1