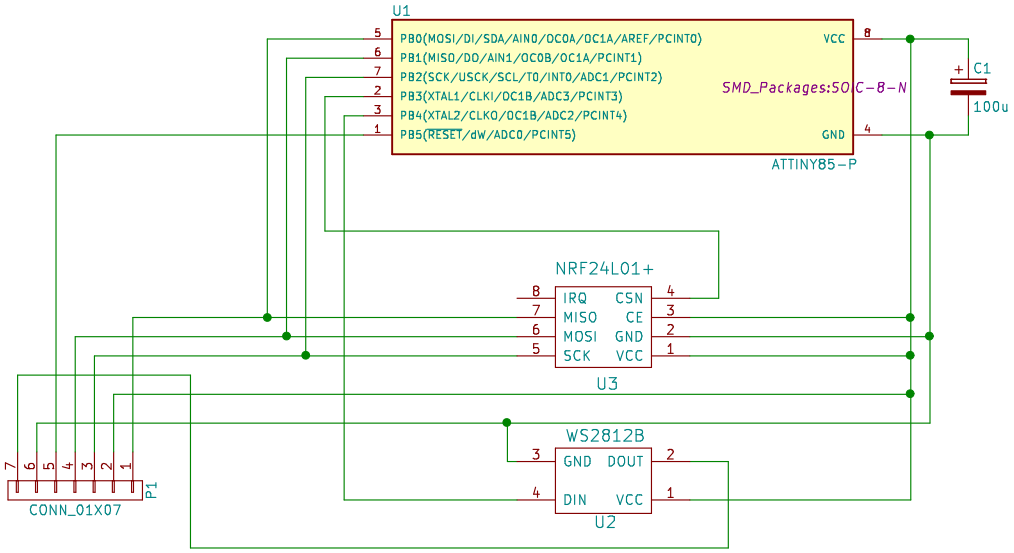

License Creative Commons Atribution 4.0 (CC-BY 4.0)
Copyright Mark Benson 2016

Sheet: /
File: Wireless RGB Pixel - no debug or pin multiplexing.sch

Title: Wireless RGB Pixel

Size: A4	Date: 2016-07-09	**Rev: 1.2**
KiCad E.D.A. kicad 4.0.5-e0-633749ubuntu16.04.1		Id: 1/1