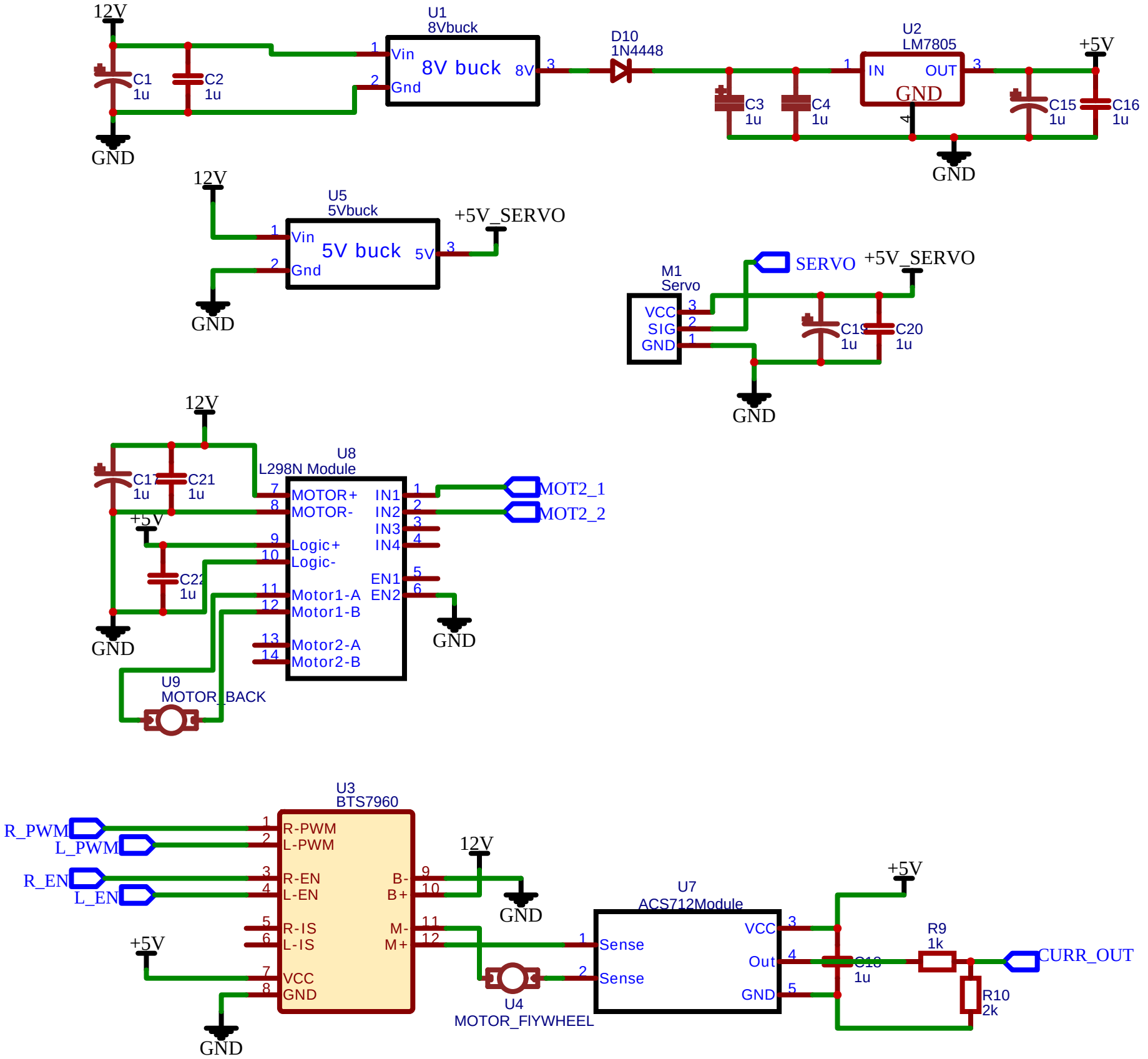
12V
C1
1u
C2
1u
GND
U1
8Vbuck
Vin
Gnd
8V buck
8V
D10
1N4448
U2
LM7805
IN
OUT
GND
C3
1u
C4
1u
C15
1u
C16
1u
+5V
GND
12V
U5
5Vbuck
Vin
Gnd
5V buck
5V
+5V_SERVO
GND
M1
Servo
VCC
SIG
GND
SERVO
+5V_SERVO
C19
1u
C20
1u
GND
12V
C17
1u
C21
1u
U8
L298N Module
MOTOR+
MOTOR-
Logic+
Logic-
Motor1-A
Motor1-B
Motor2-A
Motor2-B
IN1
IN2
IN3
IN4
EN1
EN2
MOT2_1
MOT2_2
+5V
C22
1u
GND
GND
U9
MOTOR_BACK
U3
BTS7960
R-PWM
L-PWM
R-EN
L-EN
R-IS
L-IS
VCC
GND
B-
B+
M-
M+
R_PWM
L_PWM
R_EN
L_EN
12V
GND
+5V
GND
U4
MOTOR_FIYWHEEL
U7
ACS712Module
Sense
Sense
VCC
Out
GND
+5V
C18
1u
R9
1k
R10
2k
CURR_OUT