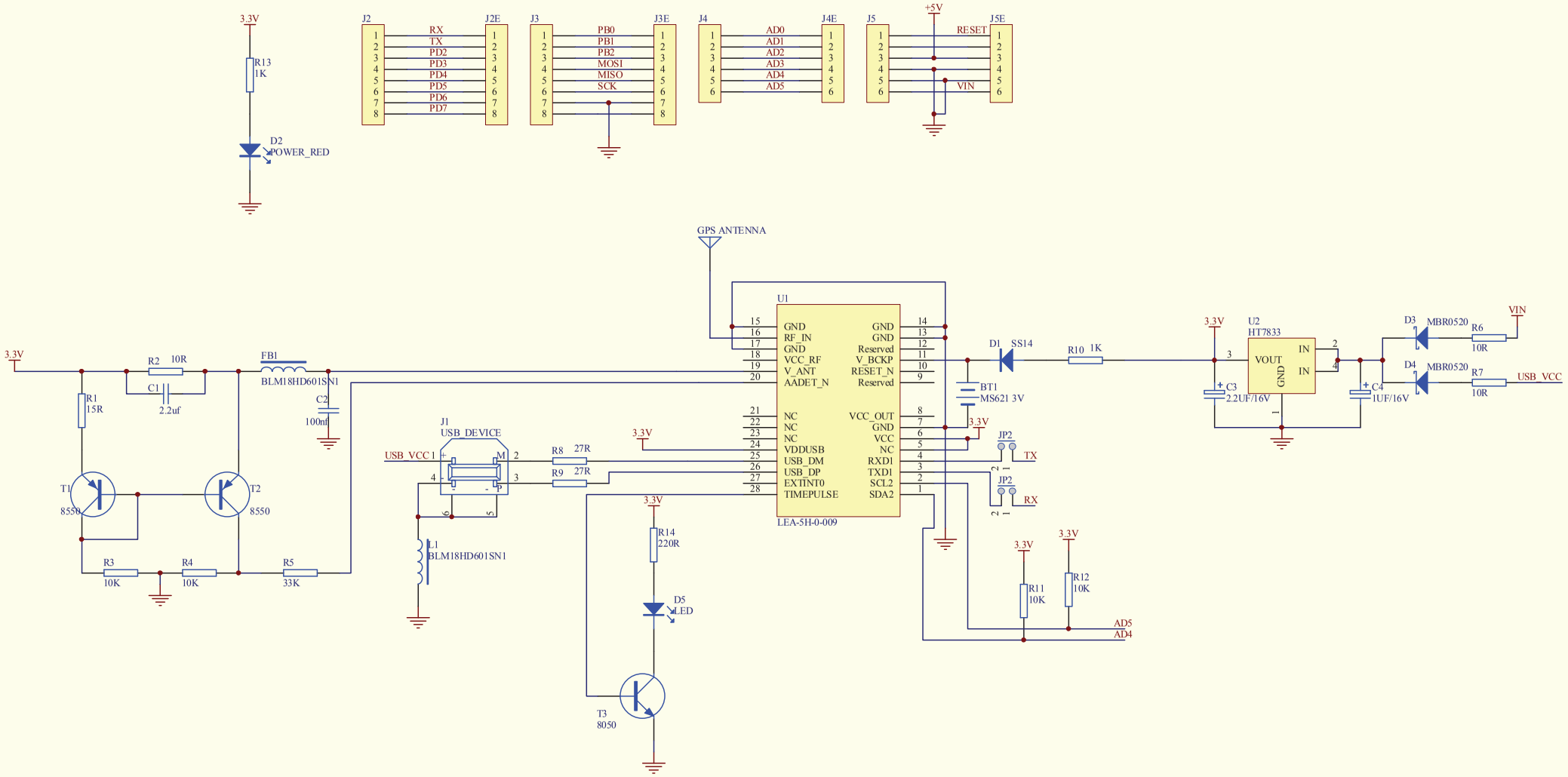

Title		
Size B	Number	Revision
Date: 21-Jan-2011		Sheet of
File: E:\item\Arduino GPS Shield模块\GPS第二版\GPS.db		Drawn by: