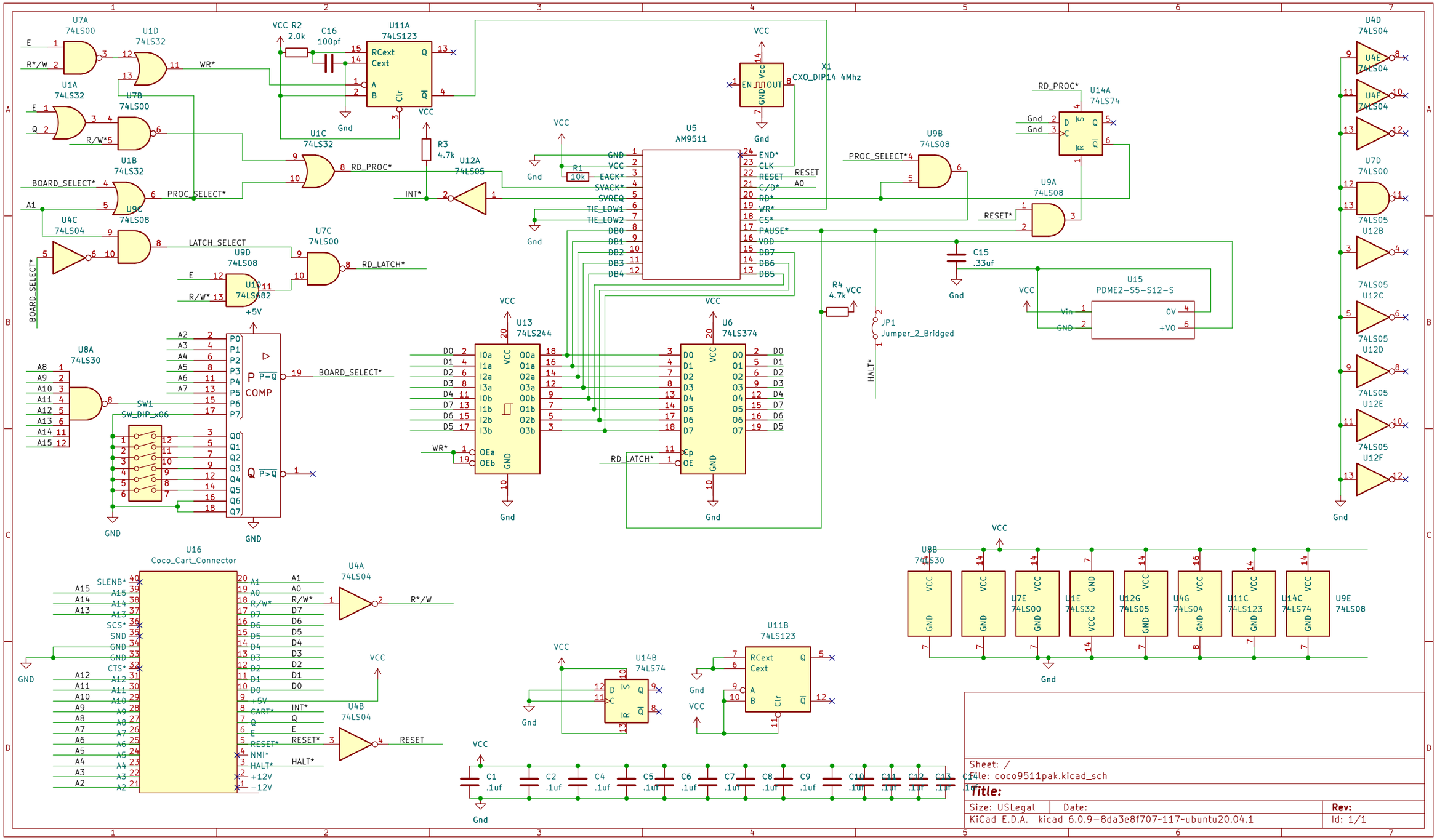
U7A 74LS00
U1D 74LS32
U1A 74LS32
U7B 74LS00
U1B 74LS32
U9C 74LS08
U4C 74LS04
U9D 74LS08
U10 74LS682
U7C 74LS00
U8A 74LS30
SW1 SW_DIP_x06
COMP
P=Q
P>Q
BOARD_SELECT*
LATCH_SELECT
RD_LATCH*
WR*
RD_PROC*
PROC_SELECT*
INT*
VCC R2 2.0k
C16 100pf
U11A 74LS123
RCext
Cext
R3 4.7k
U12A 74LS05
U1C 74LS32
U5 AM9511
R1 10k
X1 CXO_DIP14 4Mhz
U9B 74LS08
U9A 74LS08
U14A 74LS74
RESET*
RESET
A0
C15 .33uf
U15 PDME2-S5-S12-S
Vin
GND
0V
+VO
R4 4.7k
JP1 Jumper_2_Bridged
HALT*
U13 74LS244
U6 74LS374
U4D 74LS04
U4E 74LS04
U4F 74LS04
U7D 74LS00
U12B 74LS05
U12C 74LS05
U12D 74LS05
U12E 74LS05
U12F 74LS05
U16 Coco_Cart_Connector
SLENB*
SCS*
SND
CTS*
CART*
NMI*
+12V
-12V
U4A 74LS04
U4B 74LS04
R*/W
U14B 74LS74
U11B 74LS123
U8B 74LS30
U7E 74LS00
U1E 74LS32
U12G 74LS05
U4G 74LS04
U11C 74LS123
U14C 74LS74
U9E 74LS08
C1 .1uf
C2 .1uf
C4 .1uf
C5 .1uf
C6 .1uf
C7 .1uf
C8 .1uf
C9 .1uf
C10 .1uf
C11 .1uf
C12 .1uf
C13 .1uf
C14 .1uf
Sheet: /
File: coco9511pak.kicad_sch
Title:
Size: USLegal
Date:
Rev:
KiCad E.D.A. kicad 6.0.9-8da3e8f707-117-ubuntu20.04.1
Id: 1/1