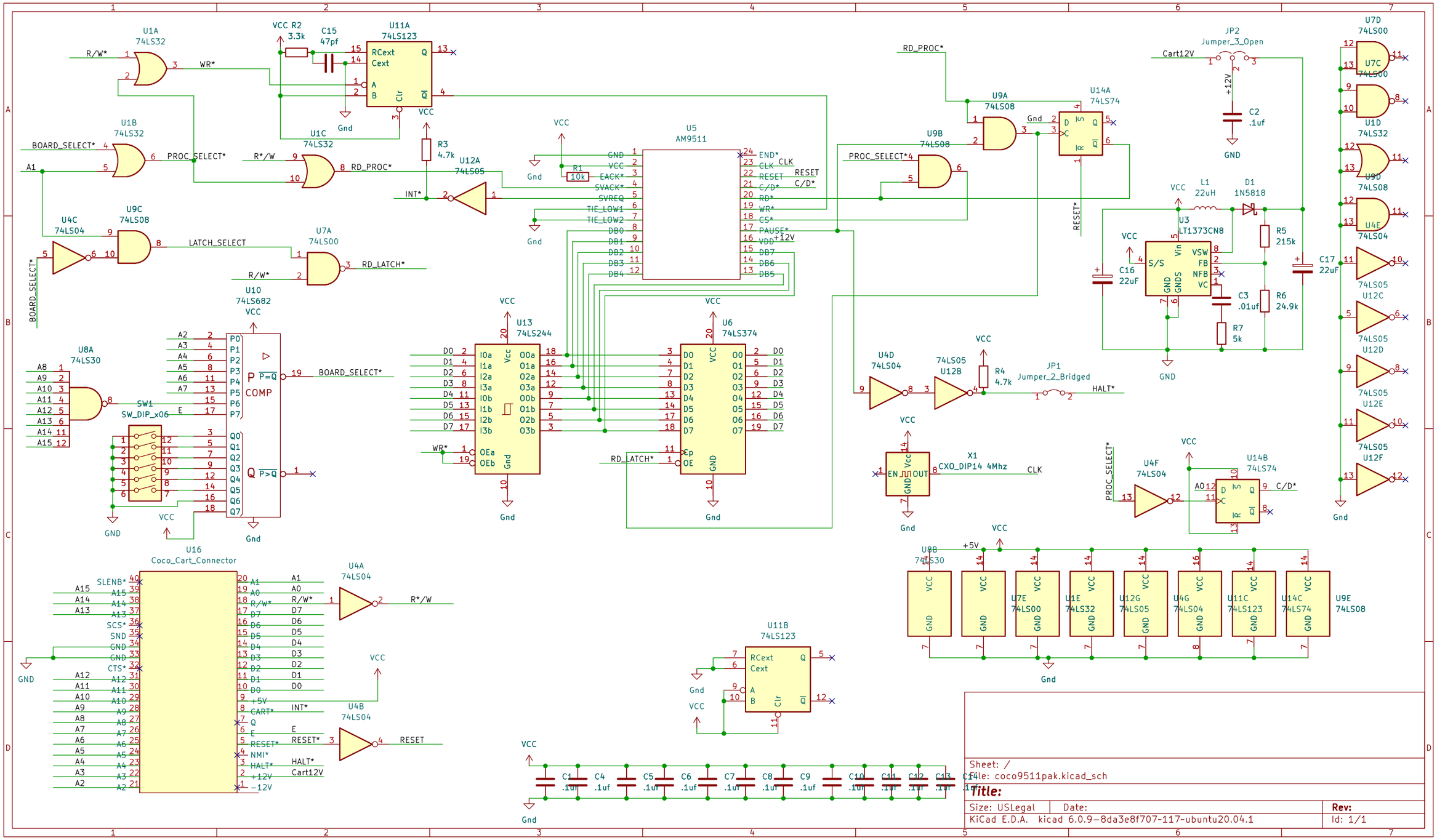
U1A 74LS32
U1B 74LS32
U1C 74LS32
U4C 74LS04
U9C 74LS08
U7A 74LS00
U11A 74LS123
U12A 74LS05
U5 AM9511
U10 74LS682
U8A 74LS30
SW1 SW_DIP_x06
U13 74LS244
U6 74LS374
U16 Coco_Cart_Connector
U4A 74LS04
U4B 74LS04
U11B 74LS123
U9A 74LS08
U9B 74LS08
U14A 74LS74
U4D 74LS04
U12B 74LS05
X1 CXO_DIP14 4Mhz
U4F 74LS04
U14B 74LS74
U8B 74LS30
U7E 74LS00
U1E 74LS32
U12G 74LS05
U4G 74LS04
U11C 74LS123
U14C 74LS74
U9E 74LS08
U7D 74LS00
U7C 74LS00
U1D 74LS32
U9D 74LS08
U4E 74LS04
U12C 74LS05
U12D 74LS05
U12E 74LS05
U12F 74LS05
JP2 Jumper_3_Open
JP1 Jumper_2_Bridged
U3 LT1373CN8
L1 22uH
D1 1N5818
R5 215k
R6 24.9k
R7 5k
C3 .01uf
C16 22uF
C17 22uF
C2 .1uf
C15 47pf
R2 3.3k
R3 4.7k
R1 10k
R4 4.7k
C1 .1uf
C4 .1uf
C5 .1uf
C6 .1uf
C7 .1uf
C8 .1uf
C9 .1uf
C10 .1uf
C11 .1uf
C12 .1uf
C13 .1uf
C14 .1uf
R/W*
WR*
BOARD_SELECT*
PROC_SELECT*
A1
RD_PROC*
LATCH_SELECT
RD_LATCH*
INT*
RESET
RESET*
HALT*
CLK
C/D*
Cart12V
+12V
+5V
VCC
Gnd
GND
Sheet: /
File: coco9511pak.kicad_sch
Title:
Size: USLegal
Date:
Rev:
KiCad E.D.A. kicad 6.0.9-8da3e8f707-117-ubuntu20.04.1
Id: 1/1