PARTS LIST			
ITEM	QTY	PART NUMBER	PART NAME
1	1	P-TET-000120-0	MASK V2
2	1	P-TET-000123-0	MOUNT V2
3	1	P-TET-000121-0	GASKET V2
4	1	P-TET-000122-0	HONEYCOMB CAP V4
5	4	P-TET-000124-0	CLIP V2
6	1	P-TET-000125-0	FILTER

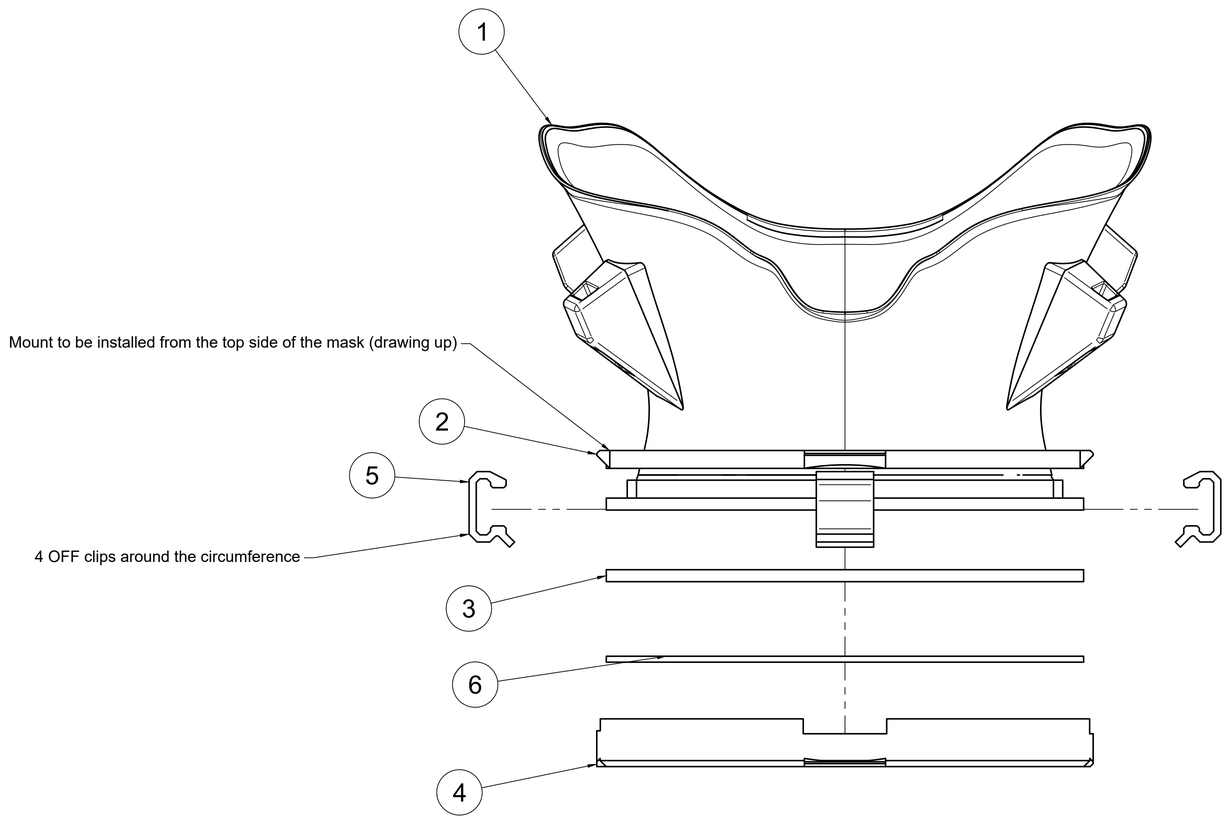

UNITS: MM

TOLERANCES:
x ± 0.5
.x ± .2
.xx ± .1
Angles ± 0.5°

3rd ANGLE PROJECTION

TETRA BIO DISTRIBUTED

WWW.TETRABIODISTRIBUTED.ORG

APPROVED

APPROVED DATE

CHECKED

DRAWN Darragh Broadbent

PROJECT: PAPRA

TITLE: A-TET-001104-0

SIZE	DATE	PART NO	REV
D	17/02/2021	D-TET-001104-0	0

DO NOT SCALE | MATERIAL: | SHEET 1/1