PARTS LIST			
ITEM	QTY	PART NUMBER	PART NAME
1	1	M-MILWAUKEE-48-11-2340	MILWAUKEE M12 BATTERY V11
2	1	P-TET-000103	M12 CONTROLLER PLATE
3	1	P-TET-000102	M12 CONTROLLER LID
4	1	P-TET-000101	M12 CONTROLLER BODY (1)
5	1	P-TET-000104	M12 LIGHT PIPE CLIP
6	1	P-TET-000100	M12 CONTROLLER KNOB V8
7	1	A-TET-001100	PAPRA CONTROL PCBA V8

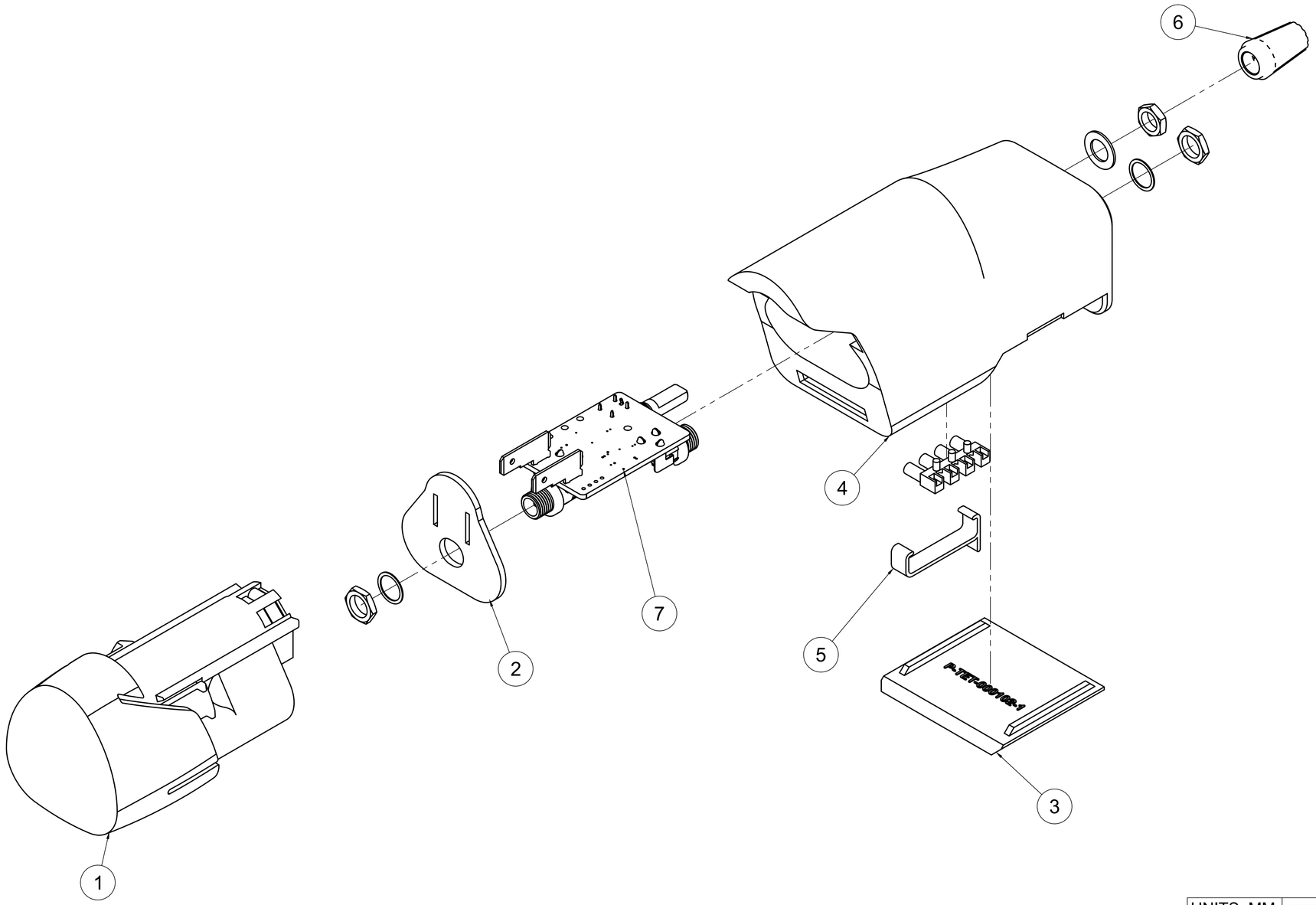

UNITS: MM

TOLERANCES:
x ± 0.5
.x ± .2
.xx ± .1
Angles ± 0.5°

3rd ANGLE PROJECTION

TETRA BIO DISTRIBUTED

WWW.TETRABIODISTRIBUTED.ORG

APPROVED

APPROVED DATE

CHECKED Patrick Campbell

DRAWN Darragh Broadbent

PROJECT: PAPRA

TITLE: M12 PAPRA Controller

SIZE	DATE	PART NO	REV
D	07/02/2021	A-TET-001102	1

DO NOT SCALE | MATERIAL: | SHEET 1/1