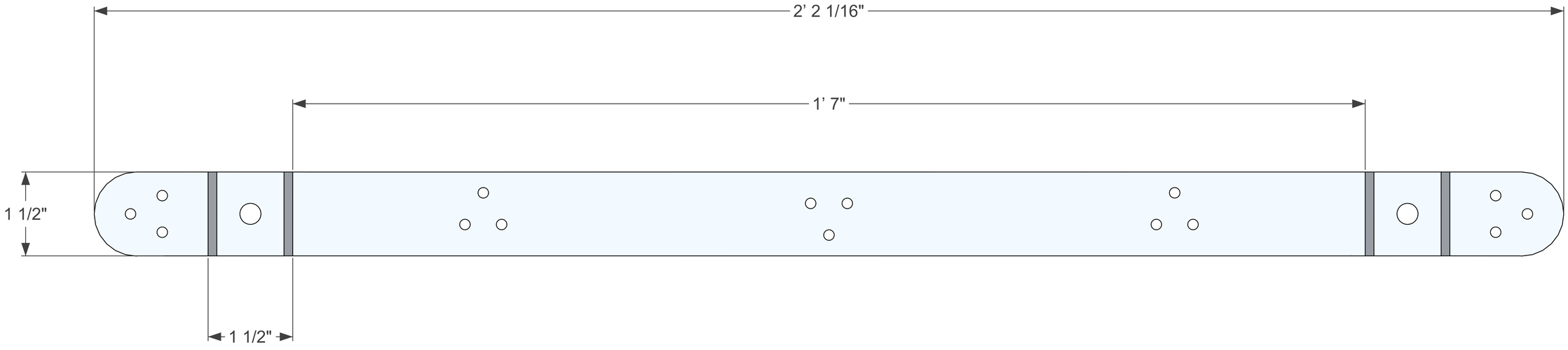
2’ 2 1/16"
1’ 7"
1 1/2"
1 1/2"

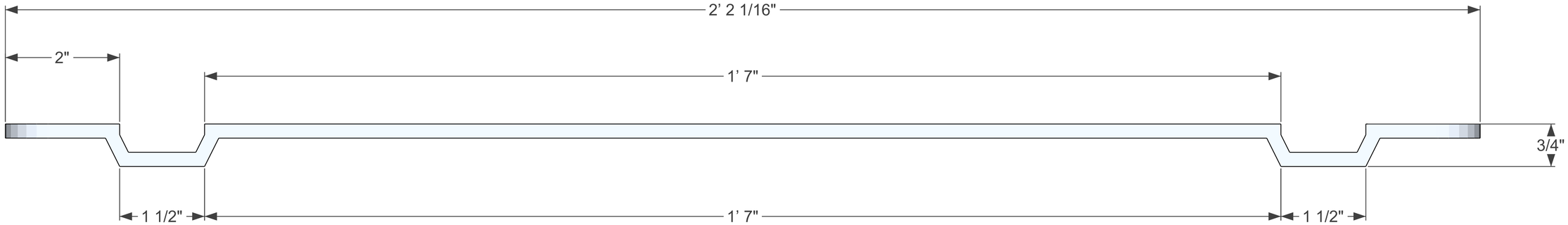
2’ 2 1/16"
2"
1’ 7"
3/4"
1 1/2"
1’ 7"
1 1/2"

1/4"
1/2"
1 1/2"

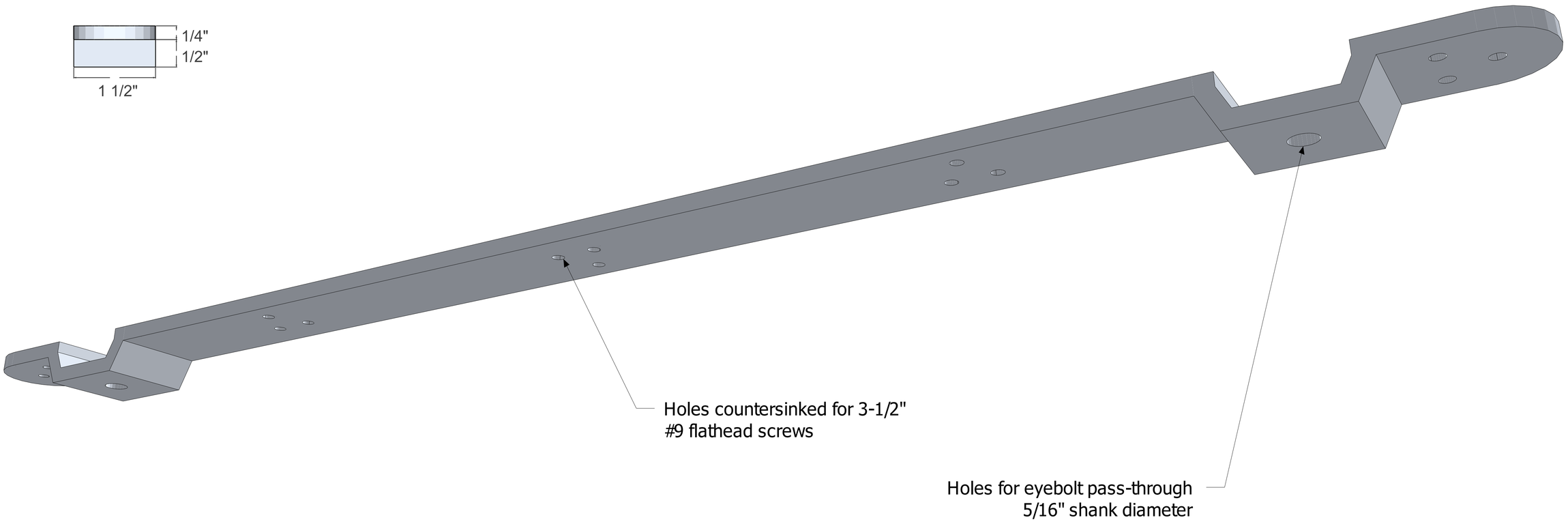
Holes countersinked for 3-1/2"
#9 flathead screws
Holes for eyebolt pass-through
5/16" shank diameter