ITEM NO.	PART NUMBER	DESCRIPTION	QTY.
06	EML2322L-OTS12	80/20 90 Degree Bracket	1
07	EML2322L-OTS7	1/4-20 X 1/2 inch BHCS	2
08	EML2322L-OTS6	1/4-20 T-Nut	2

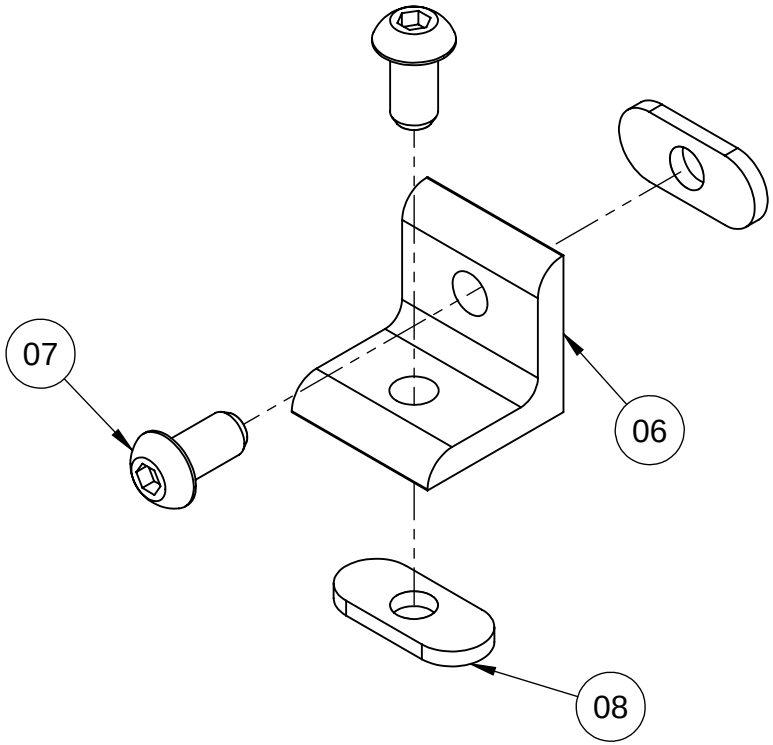

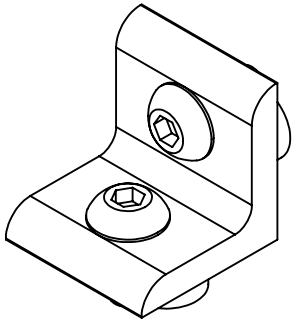

NOTES:
1. DIMS IN INCHES
2. QTY IN BOM

				TITLE: 80-20 90 Degree Bracket Assy		
				DRAWN I. WIDJAJA		
TOLERANCE UNLESS NOTED				DESIGNED I. WIDJAJA		
DIMENSION TYPE	PLACES IN DIMENSION			SIZE	DWG. NO.	REV
	0.0	0.00	0.000	A	EML2322L-A-OTS2	A
LOCATIONAL	±0.050	±0.020	±0.005			
ANGULAR	±5	±2	±0.5	SCALE: 1:1		SHEET 1 OF 1

5 4 3 2 1

SOLIDWORKS Educational Product. For Instructional Use Only.