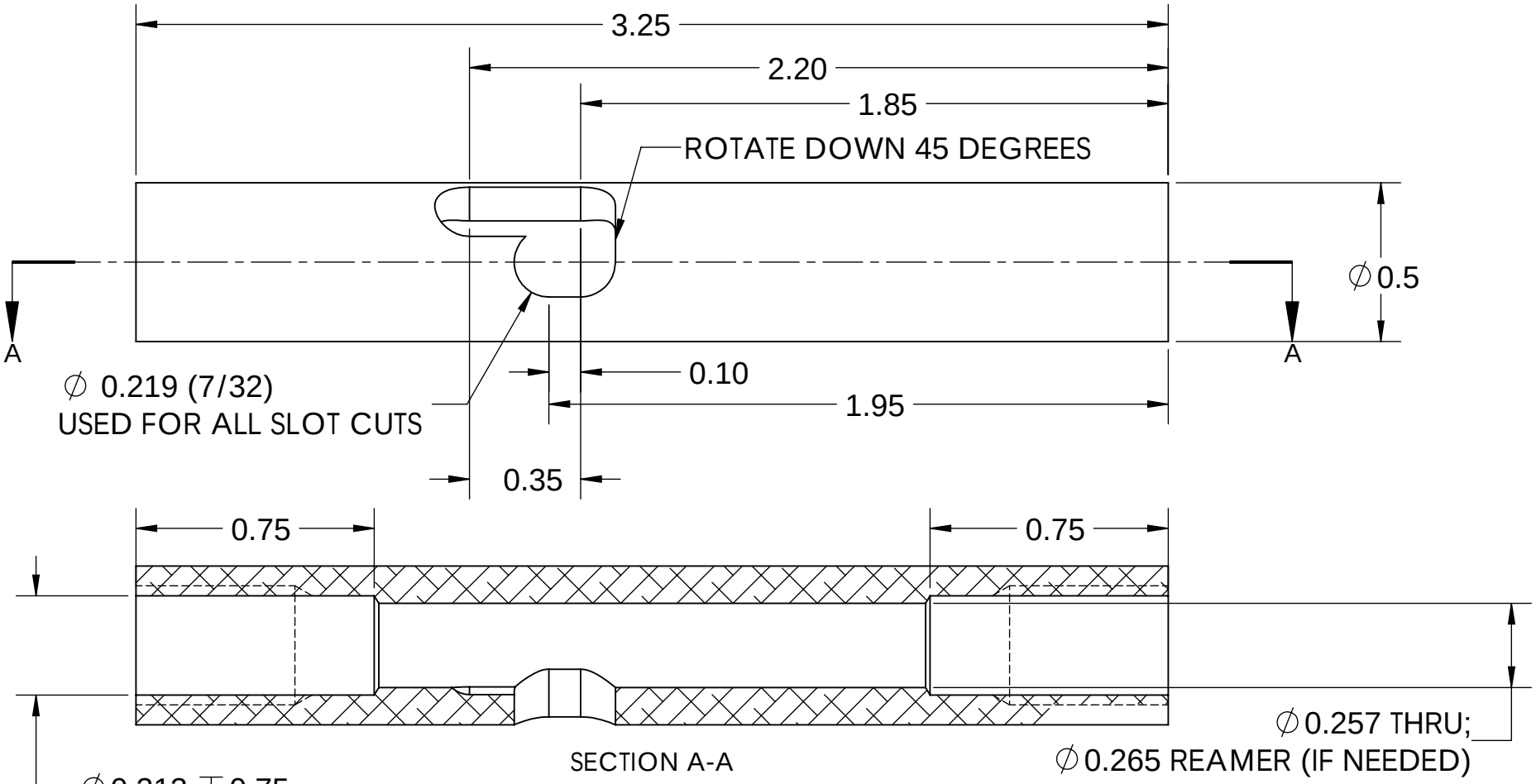

NOTES:
1. QTY: 1
2. DIMS IN INCHES
3. MATL: ALUMINUM
4. FINISH ALL SURFACES
5. BREAK ALL EDGES

TOLERANCE UNLESS NOTED				TITLE: Pen Shaft		
OPERATION	PLACES IN DIMENSION					
	0.0	0.00	0.000	DRAWN	M. WAGNER	
MACHINING	±0.100	±0.020	±0.005	DESIGNED	M. WAGNER	
CUT OFF (SAW, BURN, SHEAR)	±0.1	±0.060		SIZE	DWG. NO.	REV
WELDING	±0.1	±0.060		A	PEN-001	A
ANGULAR DIMS	±5	±2	±0.5	SCALE: 2:1		SHEET 1 OF 1

5 4 3 2 1

SOLIDWORKS Educational Product. For Instructional Use Only.