KINGSTON
REV 1.01
FAB G RETAIL

PAGE	CONTENTS
[1]	COVER PAGE
[2]	SOC: PCIEX,CLOCKS,VIDEO
[3]	SOC: POWER: MEMIO,CPUCORE,NBCORE,MISC
[4]	SOC: POWER: V_GFXCORE,VSS
[5]	SOC: MEMORY PARTITION C & D
[6]	SOC: MEMORY PARTITION A & B
[7]	SOC: VSS, SPARE
[8]	SOC: DEBUG, SB SIGNALS
[9]	SOC: DECOUPLING
[10]	SOC: DECOUPLING
[11]	SOC: DECOUPLING
[12]	MEMORY: CHANNEL D
[13]	MEMORY: CHANNEL D
[14]	MEMORY: CHANNEL D, DECOUPLING & TERMINATION
[15]	MEMORY: CHANNEL C
[16]	MEMORY: CHANNEL C
[17]	MEMORY: CHANNEL C, DECOUPLING & TERMINATION
[18]	MEMORY: CHANNEL B
[19]	MEMORY: CHANNEL B
[20]	MEMORY: CHANNEL B, DECOUPLING & TERMINATION
[21]	MEMORY: CHANNEL A
[22]	MEMORY: CHANNEL A
[23]	MEMORY: CHANNEL A, DECOUPLING & TERMINATION
[24]	KIC: USB
[25]	KIC: PCIEX, SATA, VIDEO
[26]	KIC: SMC
[27]	KIC: FACET
[28]	KIC: POWER
[29]	KIC: CLOCKS, STRAPPING, POR
[30]	KIC: POWER
[31]	KIC: DECOUPLING
[32]	ETHERNET CONTROLLER
[33]	EMMC
[34]	CONN: RJ45,TOSLINK
[35]	CONN: USB (FRONT & REAR)
[36]	CONN: WIFI
[37]	CONN: HDMI IN
[38]	CONN: HDMI OUT
[39]	CONN: HDMI SUPPORT
[40]	CONN: ODD & HDD
[41]	CONN: FRONT PANEL, FAN, AUDIO
[42]	CONN: POWER
[43]	VREGS: INPUT & OUTPUT FILTERS
[44]	VREGS: CPUCORE
[45]	VREGS: GFXCORE
[46]	VREGS: GFXCORE OUTPUT PHASE 1 & 2
[47]	VREGS: CPUCORE OUTPUT PHASE
[48]	VREGS: VTT TERMINATION
[49]	VREGS: NBCORE
[50]	VREGS: MEMIO
[51]	VREGS: V5P0
[52]	VREGS: V3P3, VSOC1P8
[53]	VREGS: VSOCPHY/VFUSE
[54]	VREGS: V_SB1P8, V_SB1P1
[55]	VREGS: V3P3 STANDBY
[56]	VREGS: V1P1 STANDBY, V1P8 STANDBY
[57]	STANDBY GATES
[58]	IR BLASTER
[59]	I2C
[60]	MARGIN: SOCPHY,SOC1P8,MEMIO,NBCORE
[61]	V_BAT
[62]	MONITOR: NBCORE, MEMIO
[63]	MONITOR: VSOC1P8, VSOCPHY
[64]	MONITOR: V12P0
[65]	CONN: FACET BOARD
[66]	CONN: SWITCHES
[67]	CONN: HDT
[68]	DEBUG: V_BURN
[69]	DEBUG: VR HEADERS & TEST POINTS
[70]	DEBUG: CONNECTORS
[71]	LABELS AND MOUNTING
[72]	BOM DEFINITIONS

RULES: (APPLIED WHEN POSSIBLE)
1. MSB TO LSB IS TOP TO BOTTOM
2. WHEN POSSIBLE: INPUTS ON LEFT, OUTPUTS ON RIGHT
3. ORDER OF PAGES=CHIP INTERFACES, TERMINATION, POWER, DECOUPLING
4. AVOID USING OFF PAGE CONNECTORS FOR ON PAGE CONNECTIONS
5. LANED SIGNALS ARE GROUPED ON SYMBOLS
6. TRANSIMITTER NAME USED AS PREFIX WITH RX AND TX CONNECTIONS
7. SUFFIX _V IS USED FOR VOLTAGE RAIL SIGNAL NAMES
8. SUFFIX _DP AND _DN ARE USED FOR DIFFERIENTAL PAIRS
9. UNNAMED NETS ARE NAMED WITH /2 TEXT SIZE
10.SUFFIX _N FOR ACTIVE LOW OR N JUNCTION
12.SUFFIX _P FOR P JUNCTION
13.SUFFIX _EN FOR ENABLE
14. 'CLK' FOR CLOCKS, 'RST' FOR RESETS
15.PWRGD FOR POWER GOOD
16.REV AND FAB ARE SET USING CUSTOM VARIABLES
   TOOLS>OPTIONS>VARIABLES

DRAWING
Mon Jan 18 12:03:57 2016

MICROSOFT CONFIDENTIAL	PROJECT NAME	PAGE	CSA PAGE	FAB	VER
	Kingston	1/72	1/72	G	1.01

SOC:PCIEX,CLOCKS,VIDEO

NOTES:
1.TO SUPPORT A PCIE WIFI INTERFACE (J3C1), POPULATE C6P6 AND C6P7
2.SEE PAGE 32 FOR 100MHZ CLOCK ROUTING INFORMATION

SOC_BASE

U7E1 IC

PCIE
1 of 17

36	IN	PEX_WIFI_SOC_TP	AR19	P_UMI_RX3_P	P_UMI_TX3_P	AP20	PEX_SOC_WIFI_TP
36	IN	PEX_WIFI_SOC_TN	AR20	P_UMI_RX3_N	P_UMI_TX3_N	AP21	PEX_SOC_WIFI_TN
32	IN	PEX_ENET_SOC_TP_C	AN21	P_UMI_RX2_P	P_UMI_TX2_P	AP23	PEX_SOC_ENET_TP
32	IN	PEX_ENET_SOC_TN_C	AN22	P_UMI_RX2_N	P_UMI_TX2_N	AP24	PEX_SOC_ENET_TN
25	IN	PEX_L1_SB_SOC_TP_C	AV22	P_UMI_RX1_P	P_UMI_TX1_P	AU23	PEX_L1_SOC_SB_TP
25	IN	PEX_L1_SB_SOC_TN_C	AV23	P_UMI_RX1_N	P_UMI_TX1_N	AU24	PEX_L1_SOC_SB_TN
25	IN	PEX_L0_SB_SOC_TP_C	AT24	P_UMI_RX0_P	P_UMI_TX0_P	AV25	PEX_L0_SOC_SB_TP
25	IN	PEX_L0_SB_SOC_TN_C	AT25	P_UMI_RX0_N	P_UMI_TX0_N	AV26	PEX_L0_SOC_SB_TN
					P_RX_ZVDD_095	AN19	RX_ZVDD_095
					P_TX_ZVDD_095	AN18	TX_ZVDD_095

X887732-001 BGA1443

C6P7 1 2 0.1 UF 10% 6.3 V EMPTY 402
C6P6 1 2 0.1 UF 10% 6.3 V EMPTY 402
C5T40 1 2 0.1 UF 10% 16 V XR5 402
C5T39 1 2 0.1 UF 10% 16 V XR5 402
C7E1 1 2 0.1 UF 10% 16 V XR5 402
C7E2 1 2 0.1 UF 10% 16 V XR5 402
C7E3 1 2 0.1 UF 10% 16 V XR5 402
C7E4 1 2 0.1 UF 10% 16 V XR5 402

R3T5 1 2 200 OHM 1%
R3T6 1 2 0 OHM 5% EMPTY 402
V_SOCPHY

OUT 36	PEX_SOC_WIFI_TP_C	
OUT 36	PEX_SOC_WIFI_TN_C	
OUT 32	PEX_SOC_ENET_TP_C	
OUT 32	PEX_SOC_ENET_TN_C	
OUT 25	PEX_L1_SOC_SB_TP_C	
OUT 25	PEX_L1_SOC_SB_TN_C	
OUT 25	PEX_L0_SOC_SB_TP_C	
OUT 25	PEX_L0_SOC_SB_TN_C	

V_SOCPHY

R4T21 1 2 510 OHM 5% CH 402

2 IN TEST25_N

USED BY AMD FOR SOC PLL CHARACTERIZATION

2 IN TEST25_P

R4T22 1 2 510 OHM 5% CH 402

U7E1 IC

VIDEO
3 of 17

BI	DP_CR_CLK	AP14	DP_CR_CLK
25 IN	DP_L0_SB_SOC_TP_C	AU18	DP1_RX0_P
25 IN	DP_L0_SB_SOC_TN_C	AU17	DP1_RX0_N
38 OUT	TMDS_TX_DP0	AU15	DP0_TX2_P
38 OUT	TMDS_TX_DN0	AU14	DP0_TX2_N
38 OUT	TMDS_TX_DP2	AV17	DP0_TX0_P
38 OUT	TMDS_TX_DN2	AV16	DP0_TX0_N
25 IN	DP_L1_SB_SOC_TP_C	AT19	DP1_RX1_P
25 IN	DP_L1_SB_SOC_TN_C	AT18	DP1_RX1_N
38 OUT	TMDS_TX_DP1	AT16	DP0_TX1_P
38 OUT	TMDS_TX_DN1	AT15	DP0_TX1_N
	DP_AUX_SOC_SB_TP	AT13	DP1_AUX_P
	DP_AUX_SOC_SB_TN	AT12	DP1_AUX_N
38 OUT	SOC_DDC_CLK	AR14	DP0_AUX_P
38 BI	SOC_DDC_DATA	AR13	DP0_AUX_N
38 OUT	TMDS_TX_CLKP	AV14	DP0_TX3_P
38 OUT	TMDS_TX_CLKN	AV13	DP0_TX3_N
		AP15	DP1_HPD
OUT 34	SPDIF_OUT	AP12	SPDIF_OUT
		AU12	DP0_HPD
	DP_TX_CALR	AM12	DP_TX_ZVSS
	DP_AUX_CALR	AR12	DP_AUX_ZVSS
	DP_RX_CALR	AN13	DP_RX_ZVSS

X887732-001 BGA1443

25 IN DP_AUX_SB_SOC_TP_C — C3R25 1 2 0.1 UF 10% 16 V XR5 402
25 IN DP_AUX_SB_SOC_TN_C — C3R23 1 2 0.1 UF 10% 16 V XR5 402

25 OUT DP1_HPD
38 IN DP0_HPD

R5D15 1 2 100 KOHM 1% CH 402

R3R6 1 2 0 OHM 5% EMPTY 402
R3R11 1 2 150 OHMS 1% CH 402
R3R13 1 2 200 OHM 1% CH 402

U7E1 IC

CLOCKS
2 of 17

29	IN	SOC_NB_PEX_SS_100M_CLKP	AU26	CLKIN_NB_P
29	IN	SOC_NB_PEX_SS_100M_CLKN	AU27	CLKIN_NB_N
29	IN	SOC_SYNC_NS_100M_CLKP	AT21	DISP_CLKIN_P
29	IN	SOC_SYNC_NS_100M_CLKN	AT22	DISP_CLKIN_N
29	IN	SOC_AV_NS_100M_CLKP	AV19	AV_CLKIN_P
29	IN	SOC_AV_NS_100M_CLKN	AV20	AV_CLKIN_N
29	IN	SOC_PEX_SS_100M_CLKP	AU20	CLKIN_P
29	IN	SOC_PEX_SS_100M_CLKN	AU21	CLKIN_N
2	OUT	TEST25_P	AR23	TEST25_P
2	OUT	TEST25_N	AR22	TEST25_N

X887732-001 BGA1443

DVI PCB ROUTING ORDERING	DP PCB ROUTING ORDERING	PIN NAME
TMDS CLOCK -	DP LANE 3 -	DP0_TX3_N
TMDS CLOCK +	DP LANE 3 +	DP0_TX3_P
TMDS DATA0 -	DP LANE 2 -	DP0_TX2_N
TMDS DATA0 +	DP LANE 2 +	DP0_TX2_P
TMDS DATA1 -	DP LANE 1 -	DP0_TX1_N
TMDS DATA1 +	DP LANE 1 +	DP0_TX1_P
TMDS DATA2 -	DP LANE 0 -	DP0_TX0_N
TMDS DATA2 +	DP LANE 0 +	DP0_TX0_P

MS_PART#	MATL	REF_DES	DESCR.	BOM PROPERTY
X941293-001	IC	U7E1	ARLENE,TSMC,SHINKO,SPIL,AMD PENANG,TYPICAL,79W TDP+,A0,AKA ROUTE 1	ARLENE_SOC_R1
X941294-001	IC	U7E1	ARLENE,TSMC,IBIDEN,SPIL,AMD PENANG,TYPICAL,79W TDP+,A0,AKA ROUTE 2	ARLENE_SOC_R2
X941295-001	IC	U7E1	ARLENE,TSMC,UMTC,SPIL,AMD PENANG,TYPICAL,79W TDP+,A0,AKA ROUTE 3	ARLENE_SOC_R3
X941296-001	IC	U7E1	ARLENE,TSMC,NOT DEFINED,SPIL,AMD PENANG,FF,79W TDP+,A0	ARLENE_SOC_FF
X941297-001	IC	U7E1	ARLENE,TSMC,NOT DEFINED,SPIL,AMD PENANG,FS,79W TDP+,A0	ARLENE_SOC_FS
X941298-001	IC	U7E1	ARLENE,TSMC,NOT DEFINED,SPIL,AMD PENANG,SF,79W TDP+,A0	ARLENE_SOC_SF
X941299-001	IC	U7E1	ARLENE,TSMC,NOT DEFINED,SPIL,AMD PENANG,SS,79W TDP+,A0	ARLENE_SOC_SS

MICROSOFT CONFIDENTIAL	PROJECT NAME	PAGE	CSA PAGE	FAB	VER
	Kingston	2/72	2/72	G	1.01

SOC: POWER: MEMIO,MEMCORE,CPUCORE,NBCORE,MISC

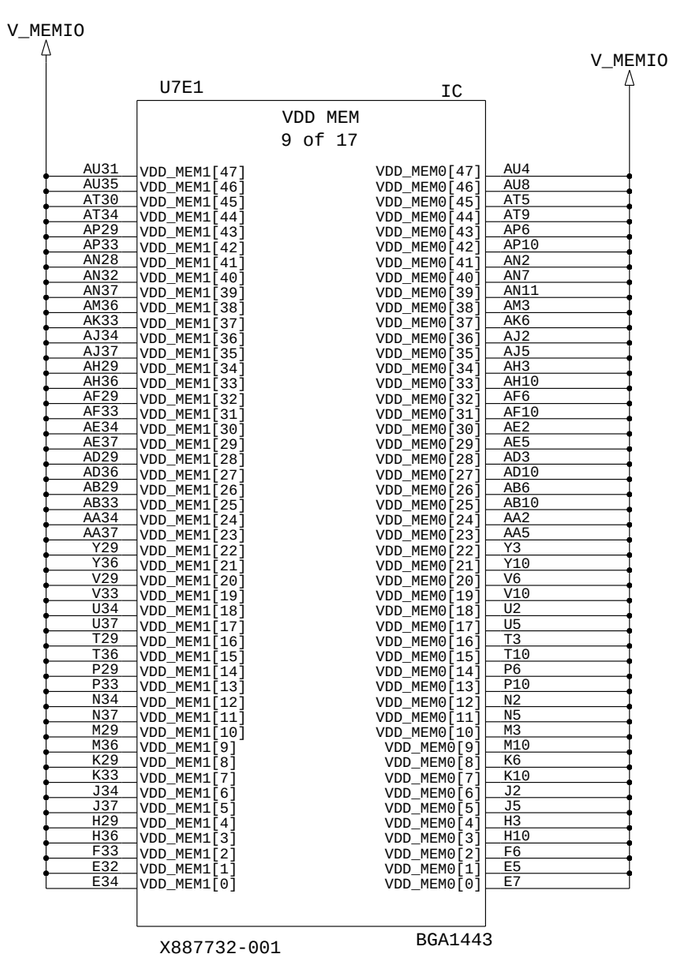

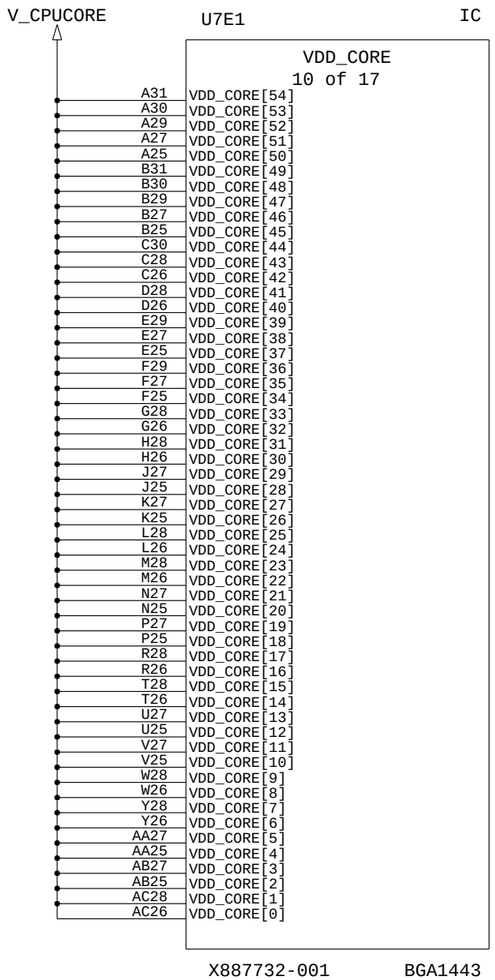

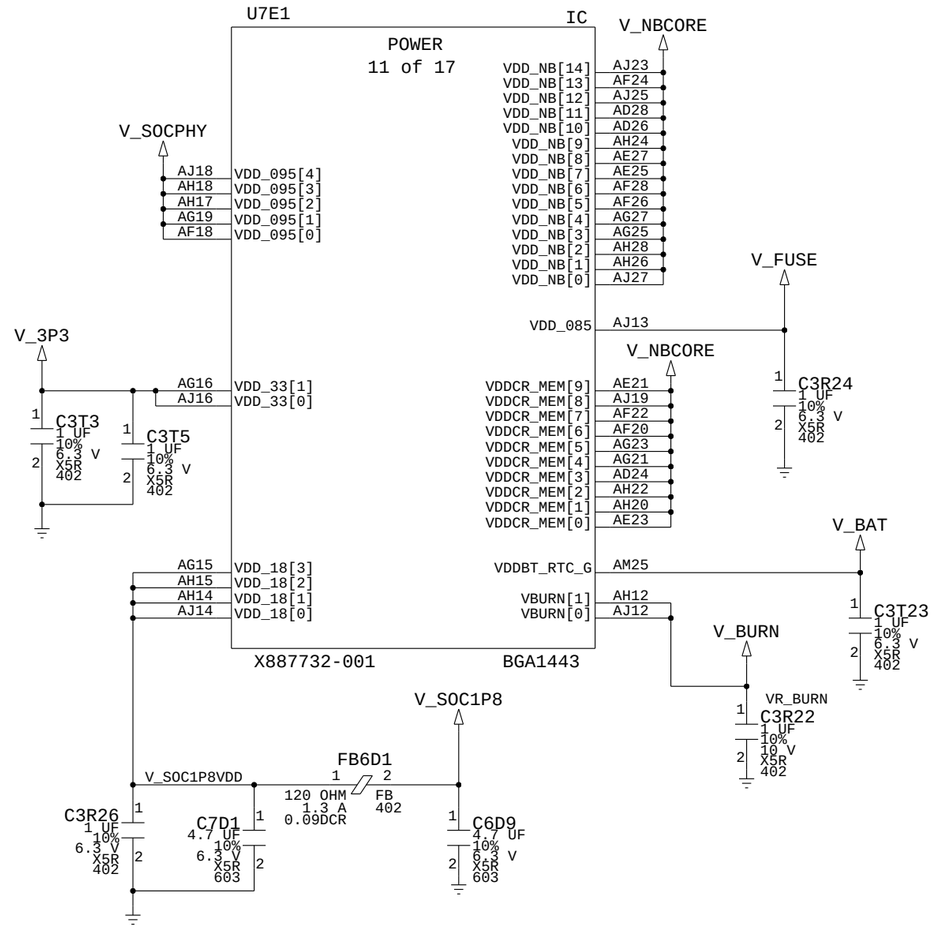

MICROSOFT CONFIDENTIAL	PROJECT NAME	PAGE	CSA PAGE	FAB	VER
	Kingston	3/72	3/72	G	1.01

SOC: POWER: V_GFXCORE,VSS

V_GFXCORE

U7E1 — IC

VDD_GFX
12 of 17

U15	VDD_GFX[60]	VDD_GFX[120]	J23
U13	VDD_GFX[59]	VDD_GFX[119]	J21
U11	VDD_GFX[58]	VDD_GFX[118]	J19
V23	VDD_GFX[57]	VDD_GFX[117]	J17
V21	VDD_GFX[56]	VDD_GFX[116]	J15
V19	VDD_GFX[55]	VDD_GFX[115]	J13
V17	VDD_GFX[54]	VDD_GFX[114]	J11
V15	VDD_GFX[53]	VDD_GFX[113]	K23
V13	VDD_GFX[52]	VDD_GFX[112]	K21
V11	VDD_GFX[51]	VDD_GFX[111]	K19
W24	VDD_GFX[50]	VDD_GFX[110]	K17
W22	VDD_GFX[49]	VDD_GFX[109]	K15
W20	VDD_GFX[48]	VDD_GFX[108]	K13
W18	VDD_GFX[47]	VDD_GFX[107]	K11
W16	VDD_GFX[46]	VDD_GFX[106]	L24
W14	VDD_GFX[45]	VDD_GFX[105]	L22
W12	VDD_GFX[44]	VDD_GFX[104]	L20
Y24	VDD_GFX[43]	VDD_GFX[103]	L18
Y22	VDD_GFX[42]	VDD_GFX[102]	L16
Y20	VDD_GFX[41]	VDD_GFX[101]	L14
Y18	VDD_GFX[40]	VDD_GFX[100]	L12
Y16	VDD_GFX[39]	VDD_GFX[99]	M24
Y14	VDD_GFX[38]	VDD_GFX[98]	M22
Y12	VDD_GFX[37]	VDD_GFX[97]	M20
AA23	VDD_GFX[36]	VDD_GFX[96]	M18
AA21	VDD_GFX[35]	VDD_GFX[95]	M16
AA19	VDD_GFX[34]	VDD_GFX[94]	M14
AA17	VDD_GFX[33]	VDD_GFX[93]	M12
AA15	VDD_GFX[32]	VDD_GFX[92]	N23
AA13	VDD_GFX[31]	VDD_GFX[91]	N21
AA11	VDD_GFX[30]	VDD_GFX[90]	N19
AB23	VDD_GFX[29]	VDD_GFX[89]	N17
AB21	VDD_GFX[28]	VDD_GFX[88]	N15
AB19	VDD_GFX[27]	VDD_GFX[87]	N13
AB17	VDD_GFX[26]	VDD_GFX[86]	N11
AB15	VDD_GFX[25]	VDD_GFX[85]	P23
AB13	VDD_GFX[24]	VDD_GFX[84]	P21
AB11	VDD_GFX[23]	VDD_GFX[83]	P19
AC24	VDD_GFX[22]	VDD_GFX[82]	P17
AC22	VDD_GFX[21]	VDD_GFX[81]	P15
AC20	VDD_GFX[20]	VDD_GFX[80]	P13
AC18	VDD_GFX[19]	VDD_GFX[79]	P11
AC16	VDD_GFX[18]	VDD_GFX[78]	R24
AC14	VDD_GFX[17]	VDD_GFX[77]	R22
AC12	VDD_GFX[16]	VDD_GFX[76]	R20
AD22	VDD_GFX[15]	VDD_GFX[75]	R18
AD20	VDD_GFX[14]	VDD_GFX[74]	R16
AD18	VDD_GFX[13]	VDD_GFX[73]	R14
AD16	VDD_GFX[12]	VDD_GFX[72]	R12
AD14	VDD_GFX[11]	VDD_GFX[71]	T24
AD12	VDD_GFX[10]	VDD_GFX[70]	T22
AE17	VDD_GFX[9]	VDD_GFX[69]	T20
AE15	VDD_GFX[8]	VDD_GFX[68]	T18
AE13	VDD_GFX[7]	VDD_GFX[67]	T16
AE11	VDD_GFX[6]	VDD_GFX[66]	T14
AF17	VDD_GFX[5]	VDD_GFX[65]	T12
AF15	VDD_GFX[4]	VDD_GFX[64]	U23
AF13	VDD_GFX[3]	VDD_GFX[63]	U21
AF11	VDD_GFX[2]	VDD_GFX[62]	U19
AG14	VDD_GFX[1]	VDD_GFX[61]	U17
AG12	VDD_GFX[0]		

X887732-001 BGA1443

V_GFXCORE

V_GFXCORE

U7E1 — IC

VDD_GFX
13 of 17

A23	VDD_GFX[181]		
A21	VDD_GFX[180]		
A19	VDD_GFX[179]		
A17	VDD_GFX[178]		
A15	VDD_GFX[177]		
A13	VDD_GFX[176]		
A11	VDD_GFX[175]		
A10	VDD_GFX[174]		
A9	VDD_GFX[173]		
B23	VDD_GFX[172]		
B21	VDD_GFX[171]		
B19	VDD_GFX[170]		
B17	VDD_GFX[169]		
B15	VDD_GFX[168]		
B13	VDD_GFX[167]		
B11	VDD_GFX[166]		
B10	VDD_GFX[165]		
C24	VDD_GFX[164]		
C22	VDD_GFX[163]		
C20	VDD_GFX[162]		
C18	VDD_GFX[161]		
C16	VDD_GFX[160]		
C14	VDD_GFX[159]		
C12	VDD_GFX[158]		
C10	VDD_GFX[157]		
D24	VDD_GFX[156]		
D22	VDD_GFX[155]		
D20	VDD_GFX[154]		
D18	VDD_GFX[153]		
D16	VDD_GFX[152]		
D14	VDD_GFX[151]		
D12	VDD_GFX[150]		
D10	VDD_GFX[149]		
E23	VDD_GFX[148]		
E21	VDD_GFX[147]		
E19	VDD_GFX[146]		
E17	VDD_GFX[145]		
E15	VDD_GFX[144]		
E13	VDD_GFX[143]		
E11	VDD_GFX[142]		
F23	VDD_GFX[141]		
F21	VDD_GFX[140]		
F19	VDD_GFX[139]		
F17	VDD_GFX[138]		
F15	VDD_GFX[137]		
F13	VDD_GFX[136]		
F11	VDD_GFX[135]		
G24	VDD_GFX[134]		
G22	VDD_GFX[133]		
G20	VDD_GFX[132]		
G18	VDD_GFX[131]		
G16	VDD_GFX[130]		
G14	VDD_GFX[129]		
G12	VDD_GFX[128]		
H24	VDD_GFX[127]		
H22	VDD_GFX[126]		
H20	VDD_GFX[125]		
H18	VDD_GFX[124]		
H16	VDD_GFX[123]		
H14	VDD_GFX[122]		
H12	VDD_GFX[121]		

X887732-001 BGA1443

U7E1 — IC

VSS
14 of 17

AN30	VSS[60]	VSS[120]	AF8
AN26	VSS[59]	VSS[119]	AF3
AN23	VSS[58]	VSS[118]	AG37
AN20	VSS[57]	VSS[117]	AG34
AN17	VSS[56]	VSS[116]	AG30
AN14	VSS[55]	VSS[115]	AG28
AN12	VSS[54]	VSS[114]	AG26
AN9	VSS[53]	VSS[113]	AG24
AN5	VSS[52]	VSS[112]	AG22
AP36	VSS[51]	VSS[111]	AG20
AP35	VSS[50]	VSS[110]	AG18
AP31	VSS[49]	VSS[109]	AG9
AP25	VSS[48]	VSS[108]	AG5
AP22	VSS[47]	VSS[107]	AG2
AP19	VSS[46]	VSS[106]	AH33
AP16	VSS[45]	VSS[105]	AH31
AP13	VSS[44]	VSS[104]	AH27
AP8	VSS[43]	VSS[103]	AH25
AP4	VSS[42]	VSS[102]	AH23
AP3	VSS[41]	VSS[101]	AH21
AR37	VSS[40]	VSS[100]	AH19
AR27	VSS[39]	VSS[99]	AH16
AR24	VSS[38]	VSS[98]	AH13
AR21	VSS[37]	VSS[97]	AH8
AR18	VSS[36]	VSS[96]	AH6
AR15	VSS[35]	VSS[95]	AJ30
AR2	VSS[34]	VSS[94]	AJ26
AT36	VSS[33]	VSS[93]	AJ24
AT32	VSS[32]	VSS[92]	AJ20
AT28	VSS[31]	VSS[91]	AJ17
AT26	VSS[30]	VSS[90]	AJ15
AT23	VSS[29]	VSS[89]	AJ9
AT20	VSS[28]	VSS[88]	AK36
AT17	VSS[27]	VSS[87]	AK31
AT14	VSS[26]	VSS[86]	AK29
AT11	VSS[25]	VSS[85]	AK23
AT7	VSS[24]	VSS[84]	AK10
AT3	VSS[23]	VSS[83]	AK8
AU38	VSS[22]	VSS[82]	AK3
AU37	VSS[21]	VSS[81]	AL37
AU33	VSS[20]	VSS[80]	AL34
AU29	VSS[19]	VSS[79]	AL30
AU25	VSS[18]	VSS[78]	AL28
AU22	VSS[17]	VSS[77]	AL25
AU19	VSS[16]	VSS[76]	AL22
AU16	VSS[15]	VSS[75]	AL19
AU13	VSS[14]	VSS[74]	AL16
AU10	VSS[13]	VSS[73]	AL12
AU6	VSS[12]	VSS[72]	AL9
AU2	VSS[11]	VSS[71]	AL5
AU1	VSS[10]	VSS[70]	AL2
AV38	VSS[9]	VSS[69]	AM33
AV37	VSS[8]	VSS[68]	AM27
AV27	VSS[7]	VSS[67]	AM24
AV24	VSS[6]	VSS[66]	AM21
AV21	VSS[5]	VSS[65]	AM18
AV18	VSS[4]	VSS[64]	AM15
AV15	VSS[3]	VSS[63]	AM13
AV12	VSS[2]	VSS[62]	AM6
AV2	VSS[1]	VSS[61]	AN34
AV1	VSS[0]		

X887732-001 BGA1443

U7E1 — IC

VSS
15 of 17

AB31	VSS[180]	VSS[240]	U22
AB28	VSS[179]	VSS[239]	U20
AB26	VSS[178]	VSS[238]	U18
AB24	VSS[177]	VSS[237]	U16
AB22	VSS[176]	VSS[236]	U14
AB20	VSS[175]	VSS[235]	U12
AB18	VSS[174]	VSS[234]	U9
AB16	VSS[173]	VSS[233]	V36
AB14	VSS[172]	VSS[232]	V31
AB12	VSS[171]	VSS[231]	V28
AB8	VSS[170]	VSS[230]	V26
AB3	VSS[169]	VSS[229]	V24
AC37	VSS[168]	VSS[228]	V22
AC34	VSS[167]	VSS[227]	V20
AC30	VSS[166]	VSS[226]	V18
AC27	VSS[165]	VSS[225]	V16
AC23	VSS[164]	VSS[224]	V14
AC21	VSS[163]	VSS[223]	V12
AC19	VSS[162]	VSS[222]	V8
AC17	VSS[161]	VSS[221]	V3
AC15	VSS[160]	VSS[220]	W37
AC13	VSS[159]	VSS[219]	W34
AC11	VSS[158]	VSS[218]	W30
AC9	VSS[157]	VSS[217]	W27
AC5	VSS[156]	VSS[216]	W25
AC2	VSS[155]	VSS[215]	W23
AD33	VSS[154]	VSS[214]	W21
AD31	VSS[153]	VSS[213]	W19
AD27	VSS[152]	VSS[212]	W17
AD25	VSS[151]	VSS[211]	W15
AD23	VSS[150]	VSS[210]	W13
AD21	VSS[149]	VSS[209]	W11
AD19	VSS[148]	VSS[208]	W9
AD17	VSS[147]	VSS[207]	W5
AD15	VSS[146]	VSS[206]	W2
AD13	VSS[145]	VSS[205]	Y33
AD11	VSS[144]	VSS[204]	Y31
AD8	VSS[143]	VSS[203]	Y27
AD6	VSS[142]	VSS[202]	Y25
AE30	VSS[141]	VSS[201]	Y23
AE28	VSS[140]	VSS[200]	Y21
AE26	VSS[139]	VSS[199]	Y19
AE24	VSS[138]	VSS[198]	Y17
AE22	VSS[137]	VSS[197]	Y15
AE20	VSS[136]	VSS[196]	Y13
AE18	VSS[135]	VSS[195]	Y11
AE16	VSS[134]	VSS[194]	Y8
AE14	VSS[133]	VSS[193]	Y6
AE12	VSS[132]	VSS[192]	AA30
AE9	VSS[131]	VSS[191]	AA28
AF36	VSS[130]	VSS[190]	AA26
AF31	VSS[129]	VSS[189]	AA24
AF27	VSS[128]	VSS[188]	AA22
AF25	VSS[127]	VSS[187]	AA20
AF23	VSS[126]	VSS[186]	AA18
AF21	VSS[125]	VSS[185]	AA16
AF19	VSS[124]	VSS[184]	AA14
AF16	VSS[123]	VSS[183]	AA12
AF14	VSS[122]	VSS[182]	AA9
AF12	VSS[121]	VSS[181]	AB36

X887732-001 BGA1443

MICROSOFT CONFIDENTIAL	PROJECT NAME	PAGE	CSA PAGE	FAB	VER
	Kingston	4/72	4/72	G	1.01

SOC: MEMORY PARTITION C & D

U7E1 — IC — MEM CHANNEL D 6 of 17 — X887732-001 — BGA1443

MD_DQ63	P2	MD_DQ63
MD_DQ62	W1	MD_DQ62
MD_DQ61	N4	MD_DQ61
MD_DQ60	V2	MD_DQ60
MD_DQ59	N1	MD_DQ59
MD_DQ58	W3	MD_DQ58
MD_DQ57	P1	MD_DQ57
MD_DQ56	W4	MD_DQ56
MD_DQ55	Y2	MD_DQ55
MD_DQ54	M2	MD_DQ54
MD_DQ53	Y1	MD_DQ53
MD_DQ52	M1	MD_DQ52
MD_DQ51	T1	MD_DQ51
MD_DQ50	N3	MD_DQ50
MD_DQ49	U3	MD_DQ49
MD_DQ48	R4	MD_DQ48
MD_DQ47	M7	MD_DQ47
MD_DQ46	R6	MD_DQ46
MD_DQ45	M5	MD_DQ45
MD_DQ44	P7	MD_DQ44
MD_DQ43	M4	MD_DQ43
MD_DQ42	R8	MD_DQ42
MD_DQ41	N6	MD_DQ41
MD_DQ40	T4	MD_DQ40
MD_DQ39	L4	MD_DQ39
MD_DQ38	H1	MD_DQ38
MD_DQ37	L3	MD_DQ37
MD_DQ36	G4	MD_DQ36
MD_DQ35	L1	MD_DQ35
MD_DQ34	H2	MD_DQ34
MD_DQ33	K1	MD_DQ33
MD_DQ32	J1	MD_DQ32
MD_DQ31	H5	MD_DQ31
MD_DQ30	K5	MD_DQ30
MD_DQ29	H4	MD_DQ29
MD_DQ28	K4	MD_DQ28
MD_DQ27	G8	MD_DQ27
MD_DQ26	L6	MD_DQ26
MD_DQ25	H7	MD_DQ25
MD_DQ24	L8	MD_DQ24
MD_DQ23	G3	MD_DQ23
MD_DQ22	C1	MD_DQ22
MD_DQ21	G1	MD_DQ21
MD_DQ20	C3	MD_DQ20
MD_DQ19	F1	MD_DQ19
MD_DQ18	D2	MD_DQ18
MD_DQ17	E1	MD_DQ17
MD_DQ16	D1	MD_DQ16
MD_DQ15	C8	MD_DQ15
MD_DQ14	D5	MD_DQ14
MD_DQ13	E8	MD_DQ13
MD_DQ12	G6	MD_DQ12
MD_DQ11	D9	MD_DQ11
MD_DQ10	F5	MD_DQ10
MD_DQ9	B7	MD_DQ9
MD_DQ8	F4	MD_DQ8
MD_DQ7	A3	MD_DQ7
MD_DQ6	D6	MD_DQ6
MD_DQ5	B3	MD_DQ5
MD_DQ4	A7	MD_DQ4
MD_DQ3	D4	MD_DQ3
MD_DQ2	C6	MD_DQ2
MD_DQ1	C4	MD_DQ1
MD_DQ0	A6	MD_DQ0
MD_DQSL_0_P	B5	MD_DQSL_0_P
MD_DQSL_0_N	A5	MD_DQSL_0_N
MD_DQSL_1_P	E3	MD_DQSL_1_P
MD_DQSL_1_N	E4	MD_DQSL_1_N
MD_DQSL_2_P	J3	MD_DQSL_2_P
MD_DQSL_2_N	J4	MD_DQSL_2_N
MD_DQSL_3_P	R1	MD_DQSL_3_P
MD_DQSL_3_N	T2	MD_DQSL_3_N
MD_DQSU_0_P	E6	MD_DQSU_0_P
MD_DQSU_0_N	F7	MD_DQSU_0_N
MD_DQSU_1_P	J8	MD_DQSU_1_P
MD_DQSU_1_N	K7	MD_DQSU_1_N
MD_DQSU_2_P	P4	MD_DQSU_2_P
MD_DQSU_2_N	P5	MD_DQSU_2_N
MD_DQSU_3_P	U1	MD_DQSU_3_P
MD_DQSU_3_N	V1	MD_DQSU_3_N
MD_DML_0	A4	MD_DML_0
MD_DMU_0	D7	MD_DMU_0
MD_DML_1	F2	MD_DML_1
MD_DMU_1	J6	MD_DMU_1
MD_DML_2	K2	MD_DML_2
MD_DMU_2	N8	MD_DMU_2
MD_DML_3	U4	MD_DML_3
MD_DMU_3	R3	MD_DMU_3

V_MEMIO

R3R10 40.2 OHM 1% EMPTY 402

R3R5 40.2 OHM 1% EMPTY 402

R2R4 40.2 OHM 1% CH 402

R2R3 0 OHM 5% 402 EMPTY

MD_TEST	AG11	MD_TEST	
MD_CLK0_DP	K9	MD_CLK0_DP	OUT 12 13
MD_CLK0_DN	J10	MD_CLK0_DN	OUT 12 13
MD_A15	V7	MD_A<15>	B1 12 13 14
MD_A14	W10	MD_A<14>	B1 12 13 14
MD_A13	U10	MD_A<13>	B1 12 13 14
MD_A12	W6	MD_A<12>	B1 12 13 14
MD_A11	Y5	MD_A<11>	B1 12 13 14
MD_A10	N10	MD_A<10>	B1 12 13 14
MD_A9	V9	MD_A<9>	B1 12 13 14
MD_A8	W7	MD_A<8>	B1 12 13 14
MD_A7	U7	MD_A<7>	B1 12 13 14
MD_A6	Y7	MD_A<6>	B1 12 13 14
MD_A5	V4	MD_A<5>	B1 12 13 14
MD_A4	R10	MD_A<4>	B1 12 13 14
MD_A3	U8	MD_A<3>	B1 12 13 14
MD_A2	Y4	MD_A<2>	B1 12 13 14
MD_A1	W8	MD_A<1>	B1 12 13 14
MD_A0	T9	MD_A<0>	B1 12 13 14
MD_BA0	T7	MD_BA<0>	B1 12 13 14
MD_BA1	V5	MD_BA<1>	B1 12 13 14
MD_BA2	U6	MD_BA<2>	B1 12 13 14
MD_CKE0	N7	MD_CKE0	OUT 12 13 14
MD_CAS_N	L10	MD_CAS_N	OUT 12 13 14
MD_RAS_N	M9	MD_RAS_N	OUT 12 13 14
MD_CS0_N	R7	MD_CS0_N	OUT 12 13 14
MD_ODT0	T5	MD_ODT0	OUT 12 13 14
MD_WE_N	P9	MD_WE_N	OUT 12 13 14
MD_RESET	Y9	MD_RESET_N	OUT 12 13 14
MD_CKE1	H9		
MD_CS1_N	F9		
MD_ODT1	G10		
MD_VREFDQ	G7	MD_VREFDQ_MM	OUT 12 13
MD_ZVDDIO	J7	MD_ZVDDIO	

U7E1 — IC — MEM CHANNEL C 5 of 17 — X887732-001 — BGA1443

MC_DQ63	AN8	MC_DQ63
MC_DQ62	AM11	MC_DQ62
MC_DQ61	AM8	MC_DQ61
MC_DQ60	AN10	MC_DQ60
MC_DQ59	AR7	MC_DQ59
MC_DQ58	AP11	MC_DQ58
MC_DQ57	AP9	MC_DQ57
MC_DQ56	AR11	MC_DQ56
MC_DQ55	AV11	MC_DQ55
MC_DQ54	AR8	MC_DQ54
MC_DQ53	AU11	MC_DQ53
MC_DQ52	AV7	MC_DQ52
MC_DQ51	AV10	MC_DQ51
MC_DQ50	AT8	MC_DQ50
MC_DQ49	AR10	MC_DQ49
MC_DQ48	AV8	MC_DQ48
MC_DQ47	AT2	MC_DQ47
MC_DQ46	AN6	MC_DQ46
MC_DQ45	AP2	MC_DQ45
MC_DQ44	AN4	MC_DQ44
MC_DQ43	AT1	MC_DQ43
MC_DQ42	AM7	MC_DQ42
MC_DQ41	AN3	MC_DQ41
MC_DQ40	AP7	MC_DQ40
MC_DQ39	AU7	MC_DQ39
MC_DQ38	AV3	MC_DQ38
MC_DQ37	AV6	MC_DQ37
MC_DQ36	AU3	MC_DQ36
MC_DQ35	AT6	MC_DQ35
MC_DQ34	AR4	MC_DQ34
MC_DQ33	AV5	MC_DQ33
MC_DQ32	AT4	MC_DQ32
MC_DQ31	AJ8	MC_DQ31
MC_DQ30	AL6	MC_DQ30
MC_DQ29	AH4	MC_DQ29
MC_DQ28	AL8	MC_DQ28
MC_DQ27	AH5	MC_DQ27
MC_DQ26	AM5	MC_DQ26
MC_DQ25	AJ6	MC_DQ25
MC_DQ24	AM4	MC_DQ24
MC_DQ23	AR1	MC_DQ23
MC_DQ22	AK1	MC_DQ22
MC_DQ21	AP1	MC_DQ21
MC_DQ20	AJ4	MC_DQ20
MC_DQ19	AN1	MC_DQ19
MC_DQ18	AK2	MC_DQ18
MC_DQ17	AM1	MC_DQ17
MC_DQ16	AL1	MC_DQ16
MC_DQ15	AC1	MC_DQ15
MC_DQ14	AG4	MC_DQ14
MC_DQ13	AB2	MC_DQ13
MC_DQ12	AG3	MC_DQ12
MC_DQ11	AB1	MC_DQ11
MC_DQ10	AH1	MC_DQ10
MC_DQ9	AC3	MC_DQ9
MC_DQ8	AH2	MC_DQ8
MC_DQ7	AJ3	MC_DQ7
MC_DQ6	AA3	MC_DQ6
MC_DQ5	AJ1	MC_DQ5
MC_DQ4	AA1	MC_DQ4
MC_DQ3	AE3	MC_DQ3
MC_DQ2	AA4	MC_DQ2
MC_DQ1	AE4	MC_DQ1
MC_DQ0	AD1	MC_DQ0
MC_DQSL_0_P	AD2	MC_DQSL_0_P
MC_DQSL_0_N	AE1	MC_DQSL_0_N
MC_DQSL_1_P	AL3	MC_DQSL_1_P
MC_DQSL_1_N	AL4	MC_DQSL_1_N
MC_DQSL_2_P	AV4	MC_DQSL_2_P
MC_DQSL_2_N	AU5	MC_DQSL_2_N
MC_DQSL_3_P	AU9	MC_DQSL_3_P
MC_DQSL_3_N	AV9	MC_DQSL_3_N
MC_DQSU_0_P	AF2	MC_DQSU_0_P
MC_DQSU_0_N	AG1	MC_DQSU_0_N
MC_DQSU_1_P	AK4	MC_DQSU_1_P
MC_DQSU_1_N	AK5	MC_DQSU_1_N
MC_DQSU_2_P	AP5	MC_DQSU_2_P
MC_DQSU_2_N	AR5	MC_DQSU_2_N
MC_DQSU_3_P	AM9	MC_DQSU_3_P
MC_DQSU_3_N	AM10	MC_DQSU_3_N
MC_DML_0	AF1	MC_DML_0
MC_DMU_0	AC4	MC_DMU_0
MC_DML_1	AM2	MC_DML_1
MC_DMU_1	AK7	MC_DMU_1
MC_DML_2	AR6	MC_DML_2
MC_DMU_2	AR3	MC_DMU_2
MC_DML_3	AT10	MC_DML_3
MC_DMU_3	AR9	MC_DMU_3

V_MEMIO

R3R9 40.2 OHM 1% EMPTY 402

R3R4 40.2 OHM 1% EMPTY 402

R3R7 40.2 OHM 1% CH 402

R3R1 0 OHM 5% 402 EMPTY

MC_TEST	AJ11	MC_TEST	
MC_CLK0_DP	AK9	MC_CLK0_DP	OUT 15 16
MC_CLK0_DN	AJ10	MC_CLK0_DN	OUT 15 16
MC_A15	AC8	MC_A<15>	B1 15 16 17
MC_A14	AA7	MC_A<14>	B1 15 16 17
MC_A13	AA10	MC_A<13>	B1 15 16 17
MC_A12	AC6	MC_A<12>	B1 15 16 17
MC_A11	AB4	MC_A<11>	B1 15 16 17
MC_A10	AE10	MC_A<10>	B1 15 16 17
MC_A9	AC7	MC_A<9>	B1 15 16 17
MC_A8	AB9	MC_A<8>	B1 15 16 17
MC_A7	AD9	MC_A<7>	B1 15 16 17
MC_A6	AA8	MC_A<6>	B1 15 16 17
MC_A5	AD5	MC_A<5>	B1 15 16 17
MC_A4	AC10	MC_A<4>	B1 15 16 17
MC_A3	AD7	MC_A<3>	B1 15 16 17
MC_A2	AB5	MC_A<2>	B1 15 16 17
MC_A1	AB7	MC_A<1>	B1 15 16 17
MC_A0	AE7	MC_A<0>	B1 15 16 17
MC_BA0	AE8	MC_BA<0>	B1 15 16 17
MC_BA1	AD4	MC_BA<1>	B1 15 16 17
MC_BA2	AE6	MC_BA<2>	B1 15 16 17
MC_CKE0	AH9	MC_CKE0	OUT 15 16 17
MC_CAS_N	AG10	MC_CAS_N	OUT 15 16 17
MC_RAS_N	AJ7	MC_RAS_N	OUT 15 16 17
MC_CS0_N	AF9	MC_CS0_N	OUT 15 16 17
MC_ODT0	AF4	MC_ODT0	OUT 15 16 17
MC_WE_N	AG7	MC_WE_N	OUT 15 16 17
MC_RESET	AA6	MC_RESET_N	OUT 15 16 17
MC_CKE1	AH7		
MC_CS1_N	AF7		
MC_ODT1	AG8		
MC_VREFDQ	AL7	MC_VREFDQ_MM	OUT 15 16
MC_ZVDDIO	AL10	MC_ZVDDIO	

MICROSOFT CONFIDENTIAL	PROJECT NAME	PAGE	CSA PAGE	FAB	VER
	Kingston	5/72	5/72	G	1.01

SOC: MEMORY PARTITION A & B

U7E1 IC — MEM CHANNEL B, 7 of 17

MB_DQ63	V37	MB_DQ63	19 BI
MB_DQ62	N38	MB_DQ62	19 BI
MB_DQ61	W38	MB_DQ61	19 BI
MB_DQ60	P37	MB_DQ60	19 BI
MB_DQ59	W36	MB_DQ59	19 BI
MB_DQ58	N35	MB_DQ58	19 BI
MB_DQ57	V38	MB_DQ57	19 BI
MB_DQ56	N36	MB_DQ56	19 BI
MB_DQ55	M37	MB_DQ55	19 BI
MB_DQ54	Y38	MB_DQ54	19 BI
MB_DQ53	M38	MB_DQ53	19 BI
MB_DQ52	Y37	MB_DQ52	19 BI
MB_DQ51	T38	MB_DQ51	19 BI
MB_DQ50	W35	MB_DQ50	19 BI
MB_DQ49	R35	MB_DQ49	19 BI
MB_DQ48	U36	MB_DQ48	19 BI
MB_DQ47	R33	MB_DQ47	19 BI
MB_DQ46	M32	MB_DQ46	19 BI
MB_DQ45	R31	MB_DQ45	19 BI
MB_DQ44	N33	MB_DQ44	19 BI
MB_DQ43	T35	MB_DQ43	19 BI
MB_DQ42	M34	MB_DQ42	19 BI
MB_DQ41	P32	MB_DQ41	19 BI
MB_DQ40	M35	MB_DQ40	19 BI
MB_DQ39	G35	MB_DQ39	19 BI
MB_DQ38	L38	MB_DQ38	19 BI
MB_DQ37	H37	MB_DQ37	19 BI
MB_DQ36	L35	MB_DQ36	19 BI
MB_DQ35	H38	MB_DQ35	19 BI
MB_DQ34	L36	MB_DQ34	19 BI
MB_DQ33	J35	MB_DQ33	19 BI
MB_DQ32	K37	MB_DQ32	19 BI
MB_DQ31	K34	MB_DQ31	18 BI
MB_DQ30	H34	MB_DQ30	18 BI
MB_DQ29	L33	MB_DQ29	18 BI
MB_DQ28	H32	MB_DQ28	18 BI
MB_DQ27	L31	MB_DQ27	18 BI
MB_DQ26	H35	MB_DQ26	18 BI
MB_DQ25	K35	MB_DQ25	18 BI
MB_DQ24	G31	MB_DQ24	18 BI
MB_DQ23	C36	MB_DQ23	18 BI
MB_DQ22	G36	MB_DQ22	18 BI
MB_DQ21	C38	MB_DQ21	18 BI
MB_DQ20	G38	MB_DQ20	18 BI
MB_DQ19	E35	MB_DQ19	18 BI
MB_DQ18	F38	MB_DQ18	18 BI
MB_DQ17	D38	MB_DQ17	18 BI
MB_DQ16	E38	MB_DQ16	18 BI
MB_DQ15	D34	MB_DQ15	18 BI
MB_DQ14	C31	MB_DQ14	18 BI
MB_DQ13	F34	MB_DQ13	18 BI
MB_DQ12	B32	MB_DQ12	18 BI
MB_DQ11	F35	MB_DQ11	18 BI
MB_DQ10	E31	MB_DQ10	18 BI
MB_DQ9	G33	MB_DQ9	18 BI
MB_DQ8	D30	MB_DQ8	18 BI
MB_DQ7	A32	MB_DQ7	18 BI
MB_DQ6	B36	MB_DQ6	18 BI
MB_DQ5	D33	MB_DQ5	18 BI
MB_DQ4	A36	MB_DQ4	18 BI
MB_DQ3	D35	MB_DQ3	18 BI
MB_DQ2	A35	MB_DQ2	18 BI
MB_DQ1	A33	MB_DQ1	18 BI
MB_DQ0	C35	MB_DQ0	18 BI
MB_DQSL_0_P	A34	MB_DQSL_0_P	18 BI
MB_DQSL_0_N	B34	MB_DQSL_0_N	18 BI
MB_DQSL_1_P	F37	MB_DQSL_1_P	18 BI
MB_DQSL_1_N	E36	MB_DQSL_1_N	18 BI
MB_DQSL_2_P	K38	MB_DQSL_2_P	19 BI
MB_DQSL_2_N	J38	MB_DQSL_2_N	19 BI
MB_DQSL_3_P	U38	MB_DQSL_3_P	19 BI
MB_DQSL_3_N	T37	MB_DQSL_3_N	19 BI
MB_DQSU_0_P	E33	MB_DQSU_0_P	18 BI
MB_DQSU_0_N	D32	MB_DQSU_0_N	18 BI
MB_DQSU_1_P	J31	MB_DQSU_1_P	18 BI
MB_DQSU_1_N	J33	MB_DQSU_1_N	19 BI
MB_DQSU_2_P	P35	MB_DQSU_2_P	19 BI
MB_DQSU_2_N	P34	MB_DQSU_2_N	19 BI
MB_DQSU_3_P	R38	MB_DQSU_3_P	19 BI
MB_DQSU_3_N	P38	MB_DQSU_3_N	19 BI
MB_DML_0	C33	MB_DML_0	18 BI
MB_DMU_0	F32	MB_DMU_0	18 BI
MB_DML_1	D37	MB_DML_1	18 BI
MB_DMU_1	K32	MB_DMU_1	18 BI
MB_DML_2	J36	MB_DML_2	19 BI
MB_DMU_2	N31	MB_DMU_2	19 BI
MB_DML_3	R36	MB_DML_3	19 BI
MB_DMU_3	U35	MB_DMU_3	19 BI

X887732-001 BGA1443

V_MEMIO

R3T15 1 — 40.2 OHM 1% — 2 EMPTY 402

MB_TEST AJ28 MB_TEST

R3T16 1 — 40.2 OHM 1% — 2 EMPTY 402

MB_CLK0_DP	K30	MB_CLK0_DP	OUT 18 19
MB_CLK0_DN	J29	MB_CLK0_DN	OUT 18 19
MB_A15	V32	MB_A<15>	BI 18 19 20
MB_A14	W29	MB_A<14>	BI 18 19 20
MB_A13	U29	MB_A<13>	BI 18 19 20
MB_A12	W33	MB_A<12>	BI 18 19 20
MB_A11	Y34	MB_A<11>	BI 18 19 20
MB_A10	N29	MB_A<10>	BI 18 19 20
MB_A9	V30	MB_A<9>	BI 18 19 20
MB_A8	W32	MB_A<8>	BI 18 19 20
MB_A7	U32	MB_A<7>	BI 18 19 20
MB_A6	Y32	MB_A<6>	BI 18 19 20
MB_A5	V35	MB_A<5>	BI 18 19 20
MB_A4	R29	MB_A<4>	BI 18 19 20
MB_A3	U31	MB_A<3>	BI 18 19 20
MB_A2	Y35	MB_A<2>	BI 18 19 20
MB_A1	W31	MB_A<1>	BI 18 19 20
MB_A0	T30	MB_A<0>	BI 18 19 20
MB_BA0	T32	MB_BA<0>	BI 18 19 20
MB_BA1	V34	MB_BA<1>	BI 18 19 20
MB_BA2	U33	MB_BA<2>	BI 18 19 20
MB_CKE0	N32	MB_CKE0	OUT 18 19 20
MB_CAS_N	L29	MB_CAS_N	OUT 18 19 20
MB_RAS_N	M30	MB_RAS_N	OUT 18 19 20
MB_CS0_N	R32	MB_CS0_N	OUT 18 19 20
MB_ODT0	T34	MB_ODT0	OUT 18 19 20
MB_WE_N	P30	MB_WE_N	OUT 18 19 20
MB_RESET	Y30	MB_RESET_N	OUT 18 19 20
MB_CKE1	H30		
MB_CS1_N	F30		
MB_ODT1	G29		

V_MEMIO

R2T1 1 — 40.2 OHM 1% — CH 402 — 2

R2T2 1 — 0 OHM 5% 402 EMPTY — 2 MB_VREFDQ_MM OUT 18 19

MB_VREFDQ G32 MB_VREFDQ

MB_ZVDDIO J32 MB_ZVDDIO

U7E1 IC — MEM CHANNEL A, 8 of 17

MA_DQ63	AM28	MA_DQ63	22 BI
MA_DQ62	AN31	MA_DQ62	22 BI
MA_DQ61	AP28	MA_DQ61	22 BI
MA_DQ60	AM30	MA_DQ60	22 BI
MA_DQ59	AR28	MA_DQ59	22 BI
MA_DQ58	AM31	MA_DQ58	22 BI
MA_DQ57	AN29	MA_DQ57	22 BI
MA_DQ56	AR32	MA_DQ56	22 BI
MA_DQ55	AV32	MA_DQ55	22 BI
MA_DQ54	AU28	MA_DQ54	22 BI
MA_DQ53	AR31	MA_DQ53	22 BI
MA_DQ52	AV28	MA_DQ52	22 BI
MA_DQ51	AT31	MA_DQ51	22 BI
MA_DQ50	AV29	MA_DQ50	22 BI
MA_DQ49	AR29	MA_DQ49	22 BI
MA_DQ48	AT29	MA_DQ48	22 BI
MA_DQ47	AN33	MA_DQ47	22 BI
MA_DQ46	AT37	MA_DQ46	22 BI
MA_DQ45	AM32	MA_DQ45	22 BI
MA_DQ44	AR36	MA_DQ44	22 BI
MA_DQ43	AP32	MA_DQ43	22 BI
MA_DQ42	AP37	MA_DQ42	22 BI
MA_DQ41	AR34	MA_DQ41	22 BI
MA_DQ40	AT38	MA_DQ40	22 BI
MA_DQ39	AU36	MA_DQ39	22 BI
MA_DQ38	AV33	MA_DQ38	22 BI
MA_DQ37	AV36	MA_DQ37	22 BI
MA_DQ36	AU32	MA_DQ36	22 BI
MA_DQ35	AR35	MA_DQ35	22 BI
MA_DQ34	AT33	MA_DQ34	22 BI
MA_DQ33	AV35	MA_DQ33	22 BI
MA_DQ32	AR33	MA_DQ32	22 BI
MA_DQ31	AL33	MA_DQ31	21 BI
MA_DQ30	AJ31	MA_DQ30	21 BI
MA_DQ29	AM34	MA_DQ29	21 BI
MA_DQ28	AJ33	MA_DQ28	21 BI
MA_DQ27	AM35	MA_DQ27	21 BI
MA_DQ26	AH35	MA_DQ26	21 BI
MA_DQ25	AL31	MA_DQ25	21 BI
MA_DQ24	AH34	MA_DQ24	21 BI
MA_DQ23	AJ35	MA_DQ23	21 BI
MA_DQ22	AP38	MA_DQ22	21 BI
MA_DQ21	AK38	MA_DQ21	21 BI
MA_DQ20	AR38	MA_DQ20	21 BI
MA_DQ19	AK37	MA_DQ19	21 BI
MA_DQ18	AM37	MA_DQ18	21 BI
MA_DQ17	AM38	MA_DQ17	21 BI
MA_DQ16	AN38	MA_DQ16	21 BI
MA_DQ15	AG36	MA_DQ15	21 BI
MA_DQ14	AB37	MA_DQ14	21 BI
MA_DQ13	AG35	MA_DQ13	21 BI
MA_DQ12	AC38	MA_DQ12	21 BI
MA_DQ11	AH38	MA_DQ11	21 BI
MA_DQ10	AB38	MA_DQ10	21 BI
MA_DQ9	AG38	MA_DQ9	21 BI
MA_DQ8	AA35	MA_DQ8	21 BI
MA_DQ7	AA38	MA_DQ7	21 BI
MA_DQ6	AJ38	MA_DQ6	21 BI
MA_DQ5	AA36	MA_DQ5	21 BI
MA_DQ4	AJ36	MA_DQ4	21 BI
MA_DQ3	AE38	MA_DQ3	21 BI
MA_DQ2	AH37	MA_DQ2	21 BI
MA_DQ1	AD37	MA_DQ1	21 BI
MA_DQ0	AF38	MA_DQ0	21 BI
MA_DQSL_0_P	AE35	MA_DQSL_0_P	21 BI
MA_DQSL_0_N	AE36	MA_DQSL_0_N	21 BI
MA_DQSL_1_P	AL35	MA_DQSL_1_P	21 BI
MA_DQSL_1_N	AL36	MA_DQSL_1_N	21 BI
MA_DQSL_2_P	AV34	MA_DQSL_2_P	22 BI
MA_DQSL_2_N	AU34	MA_DQSL_2_N	22 BI
MA_DQSL_3_P	AU30	MA_DQSL_3_P	22 BI
MA_DQSL_3_N	AV30	MA_DQSL_3_N	22 BI
MA_DQSU_0_P	AC35	MA_DQSU_0_P	21 BI
MA_DQSU_0_N	AC36	MA_DQSU_0_N	21 BI
MA_DQSU_1_P	AK34	MA_DQSU_1_P	21 BI
MA_DQSU_1_N	AK35	MA_DQSU_1_N	21 BI
MA_DQSU_2_P	AN35	MA_DQSU_2_P	22 BI
MA_DQSU_2_N	AN36	MA_DQSU_2_N	22 BI
MA_DQSU_3_P	AR30	MA_DQSU_3_P	22 BI
MA_DQSU_3_N	AP30	MA_DQSU_3_N	22 BI
MA_DML_0	AD38	MA_DML_0	21 BI
MA_DMU_0	AF37	MA_DMU_0	21 BI
MA_DML_1	AL38	MA_DML_1	21 BI
MA_DMU_1	AK32	MA_DMU_1	21 BI
MA_DML_2	AT35	MA_DML_2	22 BI
MA_DMU_2	AP34	MA_DMU_2	22 BI
MA_DML_3	AV31	MA_DML_3	22 BI
MA_DMU_3	AM29	MA_DMU_3	22 BI

X887732-001 BGA1443

V_MEMIO

R3T14 1 — 40.2 OHM 1% — 2 EMPTY 402

MA_TEST AK28 MA_TEST

R3T13 1 — 40.2 OHM 1% — 2 EMPTY 402

MA_CLK0_DP	AK30	MA_CLK0_DP	OUT 21 22
MA_CLK0_DN	AJ29	MA_CLK0_DN	OUT 21 22
MA_A15	AC31	MA_A<15>	BI 21 22 23
MA_A14	AA32	MA_A<14>	BI 21 22 23
MA_A13	AA29	MA_A<13>	BI 21 22 23
MA_A12	AC33	MA_A<12>	BI 21 22 23
MA_A11	AB35	MA_A<11>	BI 21 22 23
MA_A10	AE29	MA_A<10>	BI 21 22 23
MA_A9	AC32	MA_A<9>	BI 21 22 23
MA_A8	AB30	MA_A<8>	BI 21 22 23
MA_A7	AD30	MA_A<7>	BI 21 22 23
MA_A6	AA31	MA_A<6>	BI 21 22 23
MA_A5	AD34	MA_A<5>	BI 21 22 23
MA_A4	AC29	MA_A<4>	BI 21 22 23
MA_A3	AD32	MA_A<3>	BI 21 22 23
MA_A2	AB34	MA_A<2>	BI 21 22 23
MA_A1	AB32	MA_A<1>	BI 21 22 23
MA_A0	AE32	MA_A<0>	BI 21 22 23
MA_BA0	AE31	MA_BA<0>	BI 21 22 23
MA_BA1	AD35	MA_BA<1>	BI 21 22 23
MA_BA2	AE33	MA_BA<2>	BI 21 22 23
MA_CKE0	AH30	MA_CKE0	OUT 21 22 23
MA_CAS_N	AG29	MA_CAS_N	OUT 21 22 23
MA_RAS_N	AJ32	MA_RAS_N	OUT 21 22 23
MA_CS0_N	AF30	MA_CS0_N	OUT 21 22 23
MA_ODT0	AF35	MA_ODT0	OUT 21 22 23
MA_WE_N	AG32	MA_WE_N	OUT 21 22 23
MA_RESET	AA33	MA_RESET_N	OUT 21 22 23
MA_CKE1	AH32		
MA_CS1_N	AF32		
MA_ODT1	AG31		

V_MEMIO

R3T11 1 — 40.2 OHM 1% — CH 402 — 2

R3T12 1 — 0 OHM 5% 402 EMPTY — 2 MA_VREFDQ_MM OUT 21 22

MA_VREFDQ AL32 MA_VREFDQ

MA_ZVDDIO AL29 MA_ZVDDIO

MICROSOFT CONFIDENTIAL	PROJECT NAME	PAGE	CSA PAGE	FAB	VER
	Kingston	6/72	6/72	G	1.01

SOC: VSS,SPARE

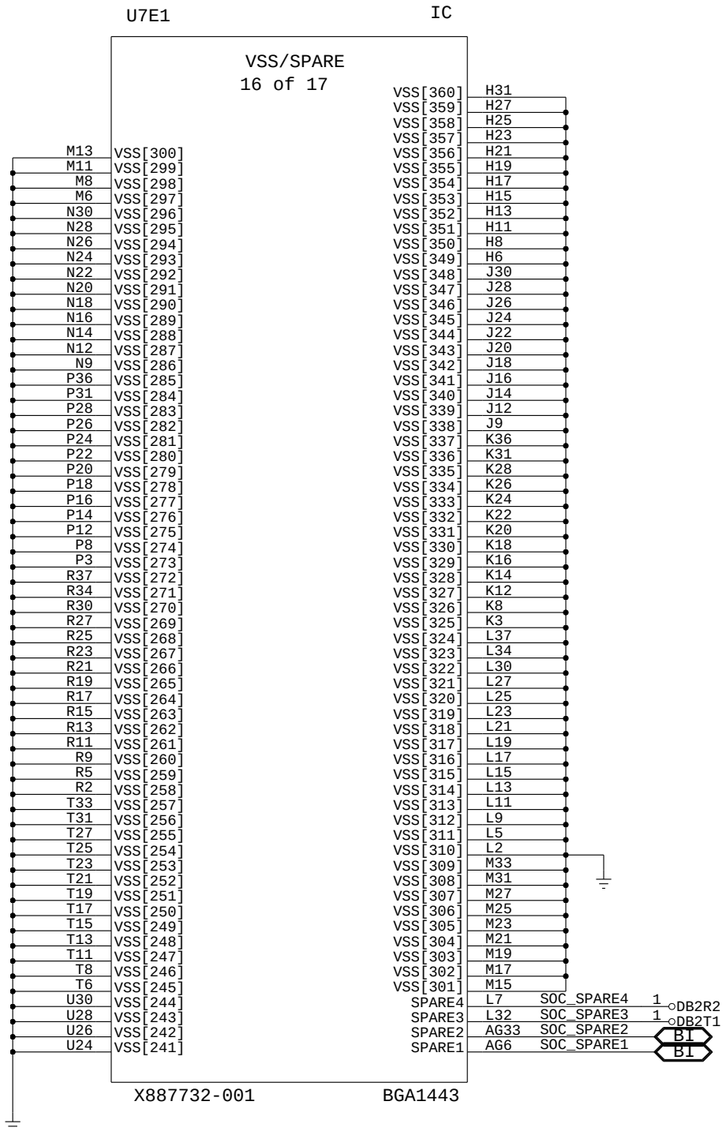

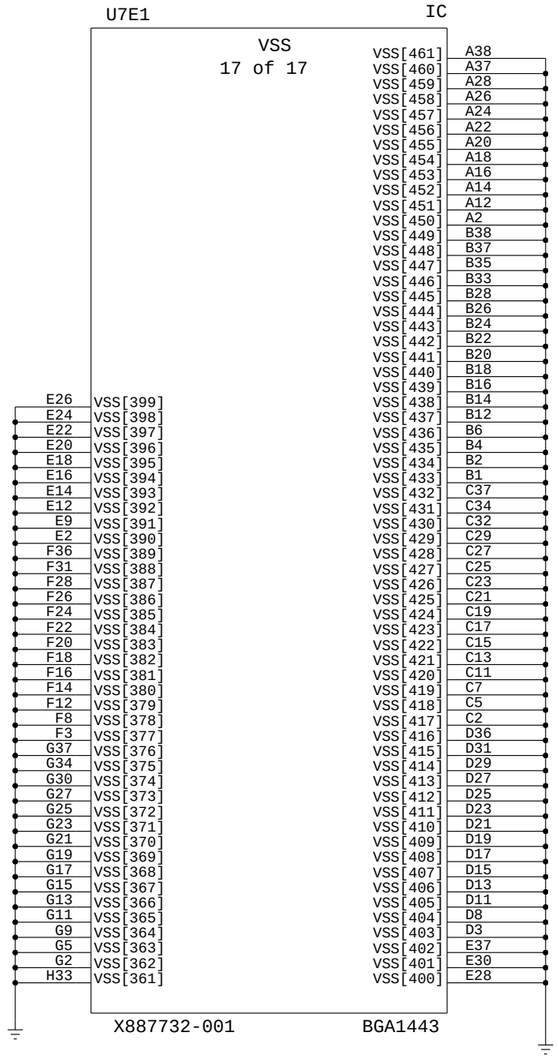

MICROSOFT CONFIDENTIAL	PROJECT NAME	PAGE	CSA PAGE	FAB	VER
	Kingston	7/72	7/72	G	1.01

SOC:DEBUG,SB SIGNALS

V_SOC1P8
R4T1 10 KOHM 1% EMPTY 402
R3T17 10 KOHM 1% EMPTY 402
A0 BYPASS FOR ARLENE A0/A1 BRING UP
NO SECURITY RISK FOR B0

U7E1 IC
JTAG/DEBUG
4 of 17

ATE_TSTCLK_EN AK11 ATE_TSTCLK_EN
AL24 DLY_PSP_RESET
A0_BYPASS AK16 A0_BYPASS
SOC_THERMTRIP_N AN15 THERMTRIP*
X32K_X2 AM23 X32K_X2
X32K_X1 AN24 X32K_X1

TMON_CAL1 AM22 TMON_CAL1 1 FTP FT3T2
TMON_CAL0 AM20 TMON_CAL0 1 FTP FT3T1

RTC_RETAIL
R4T2 0 OHM 5% 402 CH
RTC_DEBUG
R4T3 20 MOHM 5% 402 CH
RTC_DEBUG
Y4T1 SM XTAL 32 KHZ
RTC_DEBUG
C4T1 15 PF 5% 50 V NPO 402
RTC_DEBUG
C4T3 15 PF 5% 50 V NPO 402

GPIO_3P3_3 AK19 NEW_GPIO13
GPIO_3P3_2 AN25 NEW_GPIO12
GPIO_3P3_1 AK21 NEW_GPIO11
VREG_BURN_EN AK20 NEW_GPIO10
GPIO_1P8_3 AL21 NEW_GPIO9
GPIO_1P8_2 AL20 NEW_GPIO8
GPIO_1P8_1 AM19 NEW_GPIO7
GPIO_1P8_0 AM17 NEW_GPIO6
GPIO_POSTOUT_5 AM26 NEW_GPIO5
GPIO_POSTOUT_4 AR25 NEW_GPIO4
GPIO_POSTOUT_3 AP27 NEW_GPIO3
GPIO_POSTOUT_2 AP26 NEW_GPIO2
GPIO_POSTOUT_1 AR26 NEW_GPIO1
GPIO_POSTOUT_0 AT27 NEW_GPIO0

PSEN AG13

V_SOC1P8
R3T8 10 KOHM 5% EMPTY 402
R3T7 10 KOHM 1% CH 402

DBREQ_L AK26 DBREQ_N
DBRDY AL26 DBRDY
TRST_L AN27 TRST_N
TMS AK24 TMS
TDO AK25 TDO
TDI AK22 TDI
TCK AL23 TCK
SOC_RST_N AR17 RESET_N
SOC_PWR_OK AR16 PWROK

ALERT_N AN16 SP_SMC_INT_N

SVT E10 SVT
SVD C9 SVD
SVC F10 SVC
SID AP18 SID
SIC AP17 SIC
RTCCLK AK27 RTCCLK
M_VREF AH11 M_VREF

SOC_TEST32_P AL18 TEST32_P
SOC_TEST32_N AK18 TEST32_N
SOC_TEST30_P AK17 TEST30_P
SOC_TEST30_N AL17 TEST30_N
SOC_TEST28_P AL15 TEST28_P
SOC_TEST28_N AK15 TEST28_N
TEST19 AJ21 TEST19
TEST18 AL27 TEST18
TEST17 AL11 TEST17
TEST16 AK13 TEST16
TEST15 AL14 TEST15
TEST14 AM16 TEST14
TEST10 AK12 TEST10
TEST9 AM14 TEST9
AJ22 TEST6
SOC_TEST5 AK14 TEST5
SOC_TEST4 AL13 TEST4

DEBUG R5T24 1 KOHM 5% CH 402
DEBUG R5T25 1 KOHM 5% CH 402
DEBUG R3R12 0 OHM 5% EMPTY 402

VDDCR_MEM_SENSE AE19 SOC_MEMCORE_S
VDD_MEM0_SENSE AF5 SOC_MEMIO_S0
VDD_MEM1_SENSE AF34 SOC_MEMIO_S1
VSS_GFX_SENSE B8 SOC_GFXCPU_S_RTN
VDD_GFX_SENSE B9 SOC_GFXCORE_S
VDD_NB_SENSE AC25 SOC_NBCORE_S
VDD_CORE_SENSE A8 SOC_CPUCORE_S
VDD_095_SENSE AG17

DB2R4
DB2R3
DB2R1
V_SOCPHY

V_1P8STBY
R3T4 475 OHM 1% EMPTY 402
R3T2 243 OHM 1% CH 402
SB_SOC_DATA
C3T7 47 PF 5% 50 V EMPTY 402
V_1P8STBY
R3T3 475 OHM 1% EMPTY 402
R3T1 243 OHM 1% CH 402
SB_SOC_CLK
C3T4 47 PF 5% 50 V EMPTY 402

DB2R6
V_CPUCORE
DB2T2
V_GFXCORE
DB2R5
SENSE CONNECTION FOR VRTB

V_MEMIO
R3R2 1 KOHM 1% CH 402
NET M_VREF_W
LEFT FOR 8L
MEMORY MARGINING
M_VREF_W R7D1 0 OHM 5% 402 EMPTY
M_VREF
R3R3 1 KOHM 1% CH 402
C3R21 1 UF 10% 6.3 V X5R 402

X887732-001 BGA1443

MICROSOFT CONFIDENTIAL	PROJECT NAME	PAGE	CSA PAGE	FAB	VER
	Kingston	8/72	8/72	G	1.01

SOC: DECOUPLING

V_GFXCORE 29 0805 22UF

C2T35 1 2 22 UF 20% 6.3 V X5R 805
C2R38 1 2 22 UF 20% 6.3 V X5R 805
C2T15 1 2 22 UF 20% 6.3 V X5R 805
C2R11 1 2 22 UF 20% 6.3 V X5R 805
C2R12 1 2 22 UF 20% 6.3 V X5R 805

C2R37 1 2 22 UF 20% 6.3 V X5R 805
C2R33 1 2 22 UF 20% 6.3 V EMPTY 805
C2T14 1 2 22 UF 20% 6.3 V X5R 805
C2R21 1 2 22 UF 20% 6.3 V X5R 805
C2T12 1 2 22 UF 20% 6.3 V X5R 805
C2R19 1 2 22 UF 20% 6.3 V X5R 805
C2R18 1 2 22 UF 20% 6.3 V X5R 805

C2T31 1 2 22 UF 20% 6.3 V EMPTY 805
C2R10 1 2 22 UF 20% 6.3 V EMPTY 805
C2T11 1 2 22 UF 20% 6.3 V EMPTY 805
C2T33 1 2 22 UF 20% 6.3 V X5R 805
C2R36 1 2 22 UF 20% 6.3 V X5R 805
C2T13 1 2 22 UF 20% 6.3 V X5R 805
C2T30 1 2 22 UF 20% 6.3 V EMPTY 805
C2R13 1 2 22 UF 20% 6.3 V X5R 805

C2R17 1 2 22 UF 20% 6.3 V EMPTY 805
C2R16 1 2 22 UF 20% 6.3 V EMPTY 805
C2T34 1 2 22 UF 20% 6.3 V X5R 805
C2T10 1 2 22 UF 20% 6.3 V EMPTY 805
C2R34 1 2 22 UF 20% 6.3 V EMPTY 805
C2R35 1 2 22 UF 20% 6.3 V X5R 805
C2T32 1 2 22 UF 20% 6.3 V X5R 805
C2R9 1 2 22 UF 20% 6.3 V EMPTY 805
C2R20 1 2 22 UF 20% 6.3 V X5R 805

V_GFXCORE 44 0805 10UF

C3R17 1 2 10 UF 10% 6.3 V X5R 805
C2T6 1 2 10 UF 10% 6.3 V X5R 805
C2T7 1 2 10 UF 10% 6.3 V X5R 805
C2T8 1 2 10 UF 10% 6.3 V X5R 805
C2T9 1 2 10 UF 10% 6.3 V X5R 805
C3T2 1 2 10 UF 10% 6.3 V X5R 805
C3R18 1 2 10 UF 10% 6.3 V X5R 805
C3R19 1 2 10 UF 10% 6.3 V X5R 805
C2T40 1 2 10 UF 10% 6.3 V X5R 805

C3R20 1 2 10 UF 10% 6.3 V X5R 805
C2T1 1 2 10 UF 10% 6.3 V X5R 805
C2T2 1 2 10 UF 10% 6.3 V X5R 805
C2T41 1 2 10 UF 10% 6.3 V X5R 805
C2T16 1 2 10 UF 10% 6.3 V X5R 805
C3T1 1 2 10 UF 10% 6.3 V X5R 805
C2R24 1 2 10 UF 10% 6.3 V X5R 805
C2R25 1 2 10 UF 10% 6.3 V X5R 805
C2R26 1 2 10 UF 10% 6.3 V X5R 805
C2R27 1 2 10 UF 10% 6.3 V X5R 805

C2R28 1 2 10 UF 10% 6.3 V X5R 805
C2R29 1 2 10 UF 10% 6.3 V X5R 805
C2R30 1 2 10 UF 10% 6.3 V X5R 805
C2R31 1 2 10 UF 10% 6.3 V X5R 805
C2R32 1 2 10 UF 10% 6.3 V X5R 805
C2T5 1 2 10 UF 10% 6.3 V X5R 805
C2T4 1 2 10 UF 10% 6.3 V X5R 805
C2T3 1 2 10 UF 10% 6.3 V X5R 805
C2T17 1 2 10 UF 10% 6.3 V X5R 805
C2T18 1 2 10 UF 10% 6.3 V X5R 805

C2T19 1 2 10 UF 10% 6.3 V X5R 805
C2T20 1 2 10 UF 10% 6.3 V X5R 805
C2T21 1 2 10 UF 10% 6.3 V X5R 805
C2T22 1 2 10 UF 10% 6.3 V X5R 805
C2T36 1 2 10 UF 10% 6.3 V X5R 805
C2T38 1 2 10 UF 10% 6.3 V X5R 805
C2T23 1 2 10 UF 10% 6.3 V X5R 805
C2T24 1 2 10 UF 10% 6.3 V X5R 805
C2T25 1 2 10 UF 10% 6.3 V X5R 805
C2T26 1 2 10 UF 10% 6.3 V X5R 805

C2T28 1 2 10 UF 10% 6.3 V X5R 805
C2T29 1 2 10 UF 10% 6.3 V X5R 805
C2T37 1 2 10 UF 10% 6.3 V X5R 805
C2T39 1 2 10 UF 10% 6.3 V X5R 805
C2T27 1 2 10 UF 10% 6.3 V X5R 805

MICROSOFT CONFIDENTIAL	PROJECT NAME	PAGE	CSA PAGE	FAB	VER
	Kingston	9/72	9/72	G	1.01

SOC: DECOUPLING

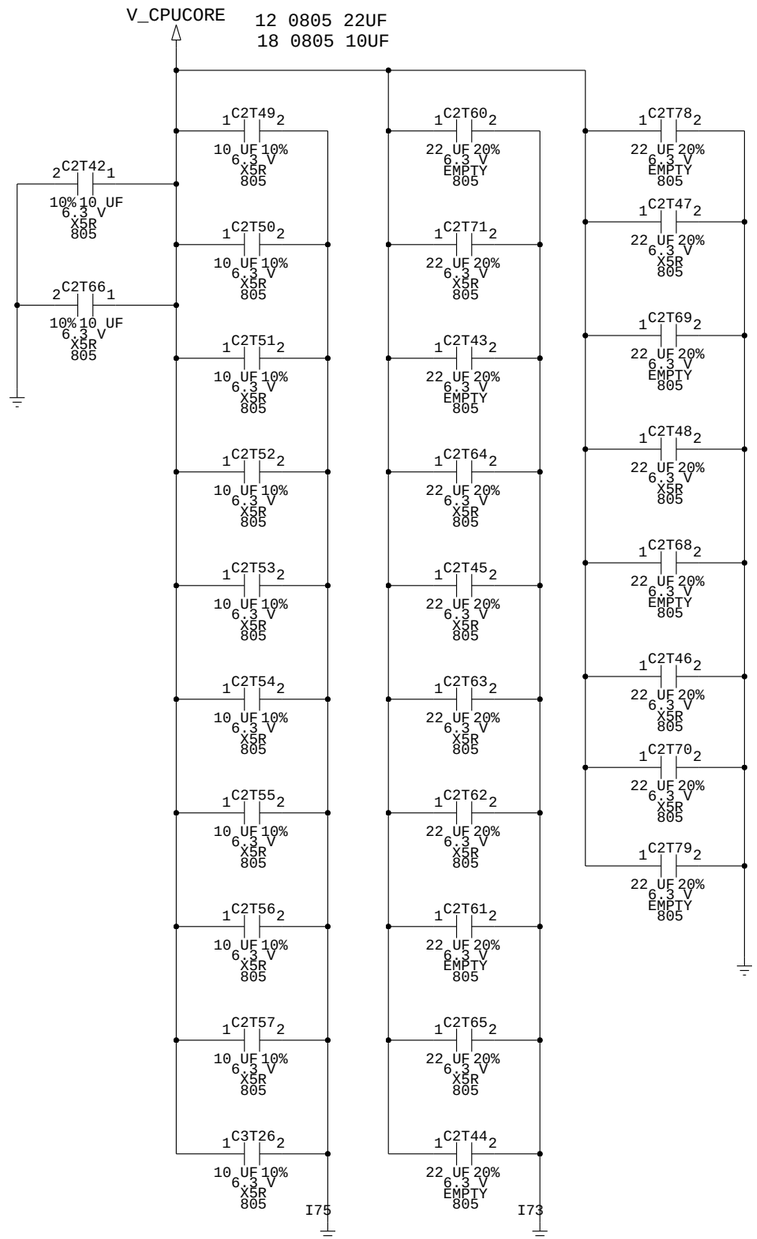

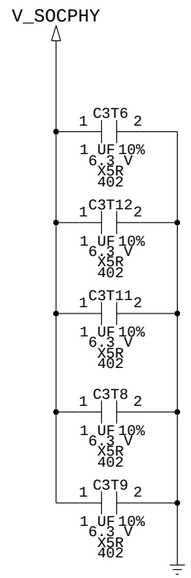

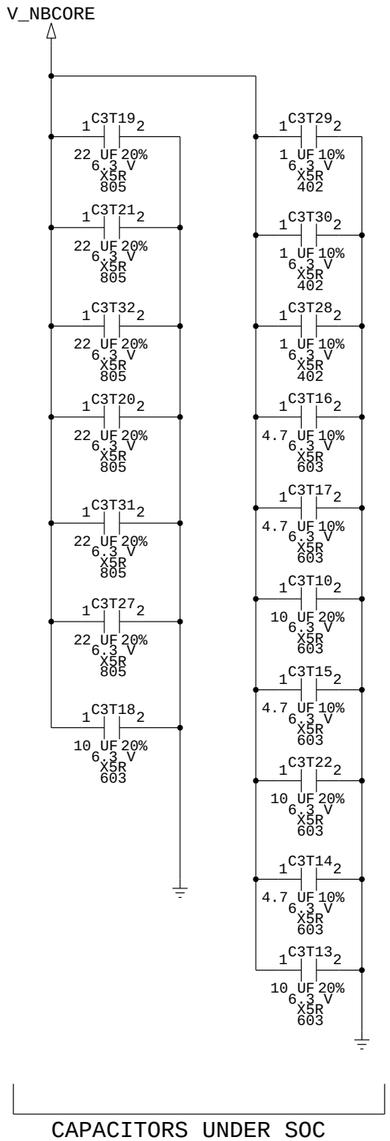

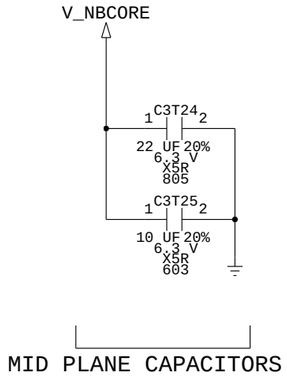

MICROSOFT CONFIDENTIAL	PROJECT NAME	PAGE	CSA PAGE	FAB	VER
	Kingston	10/72	10/72	G	1.01

SOC: DECOUPLING

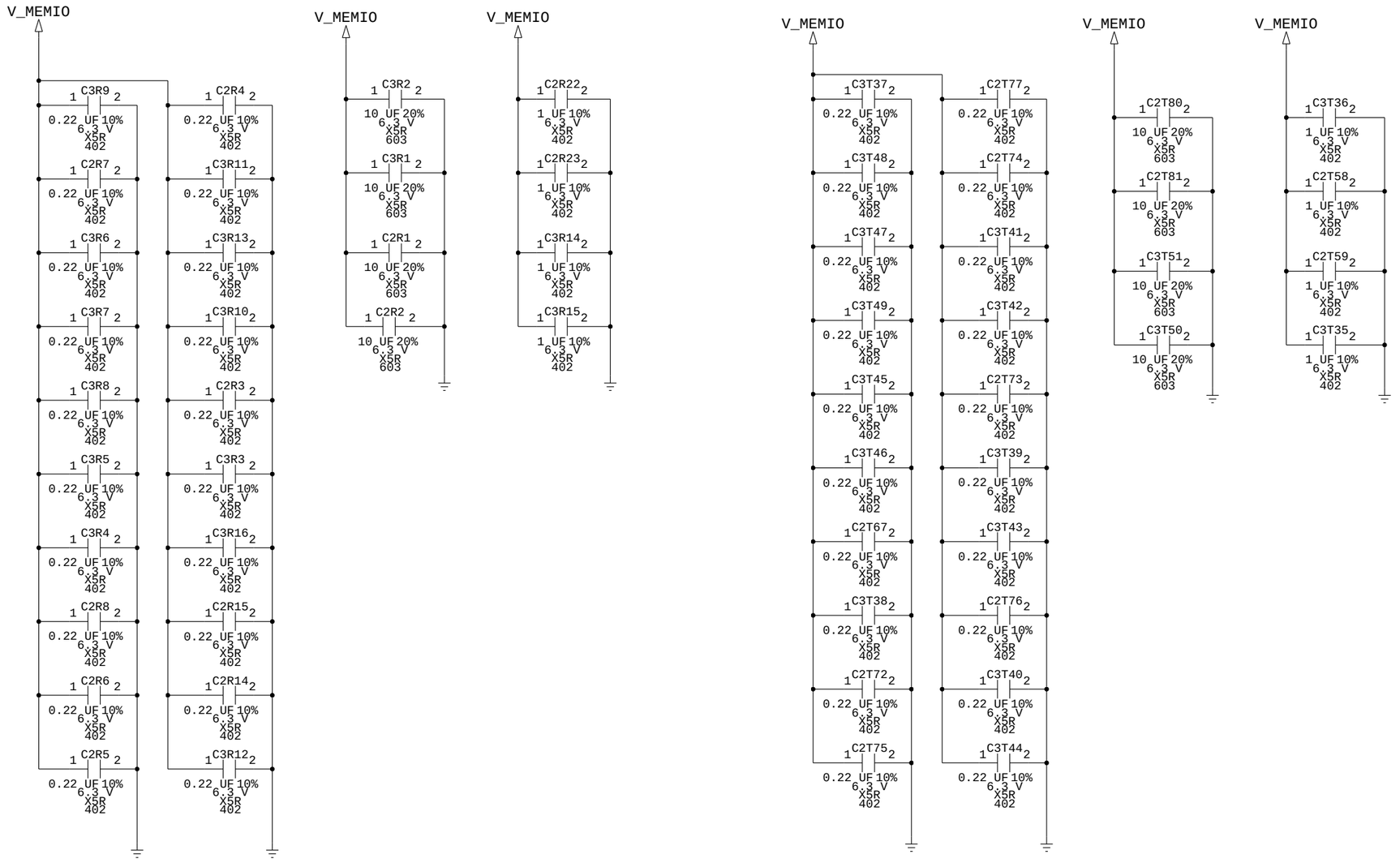

MICROSOFT CONFIDENTIAL	PROJECT NAME	PAGE	CSA PAGE	FAB	VER
	Kingston	11/72	11/72	G	1.01

MEMORY: CHANNEL D

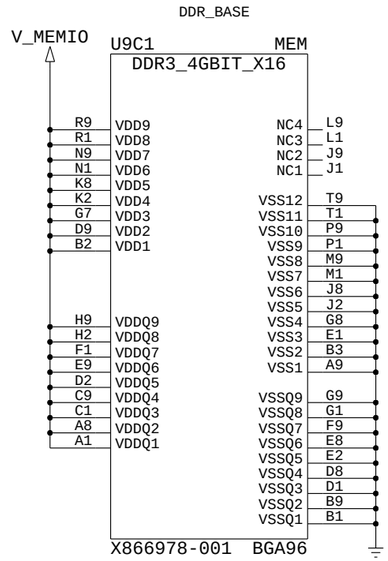

BYTE LANE 0
BYTE LANE 1

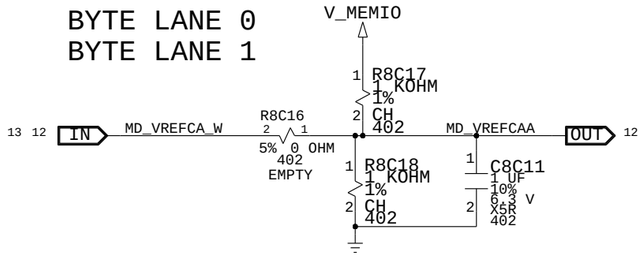

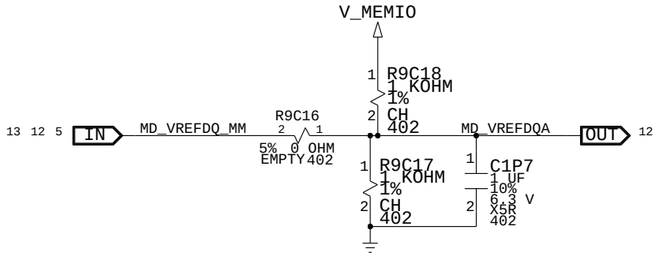

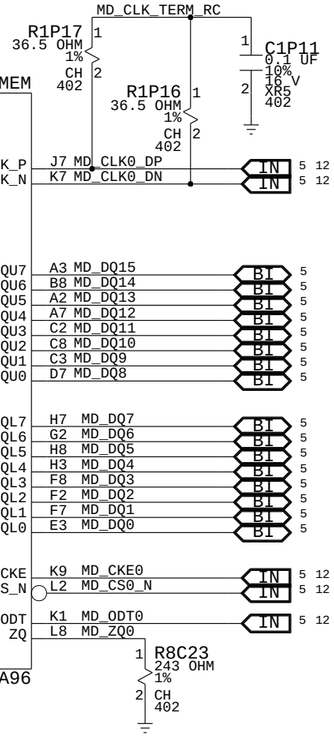

BYTE LANE 2
BYTE LANE 3

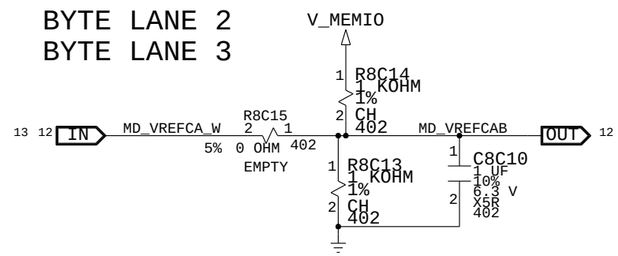

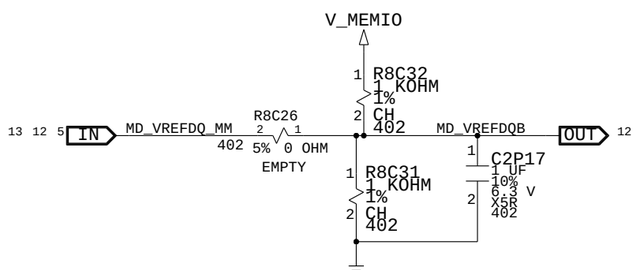

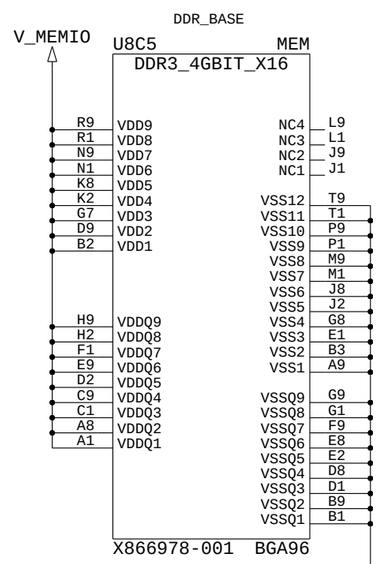

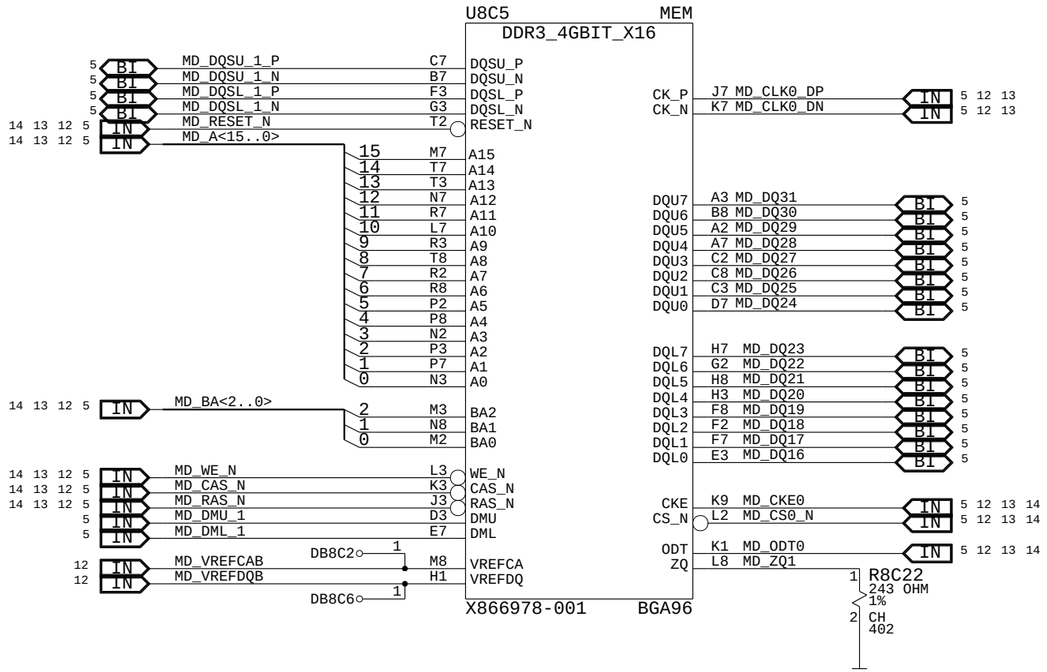

MICROSOFT CONFIDENTIAL	PROJECT NAME	PAGE	CSA PAGE	FAB	VER
	Kingston	12/72	12/72	G	1.01

MEMORY: CHANNEL D

BYTE LANE 4
BYTE LANE 5

BYTE LANE 6
BYTE LANE 7

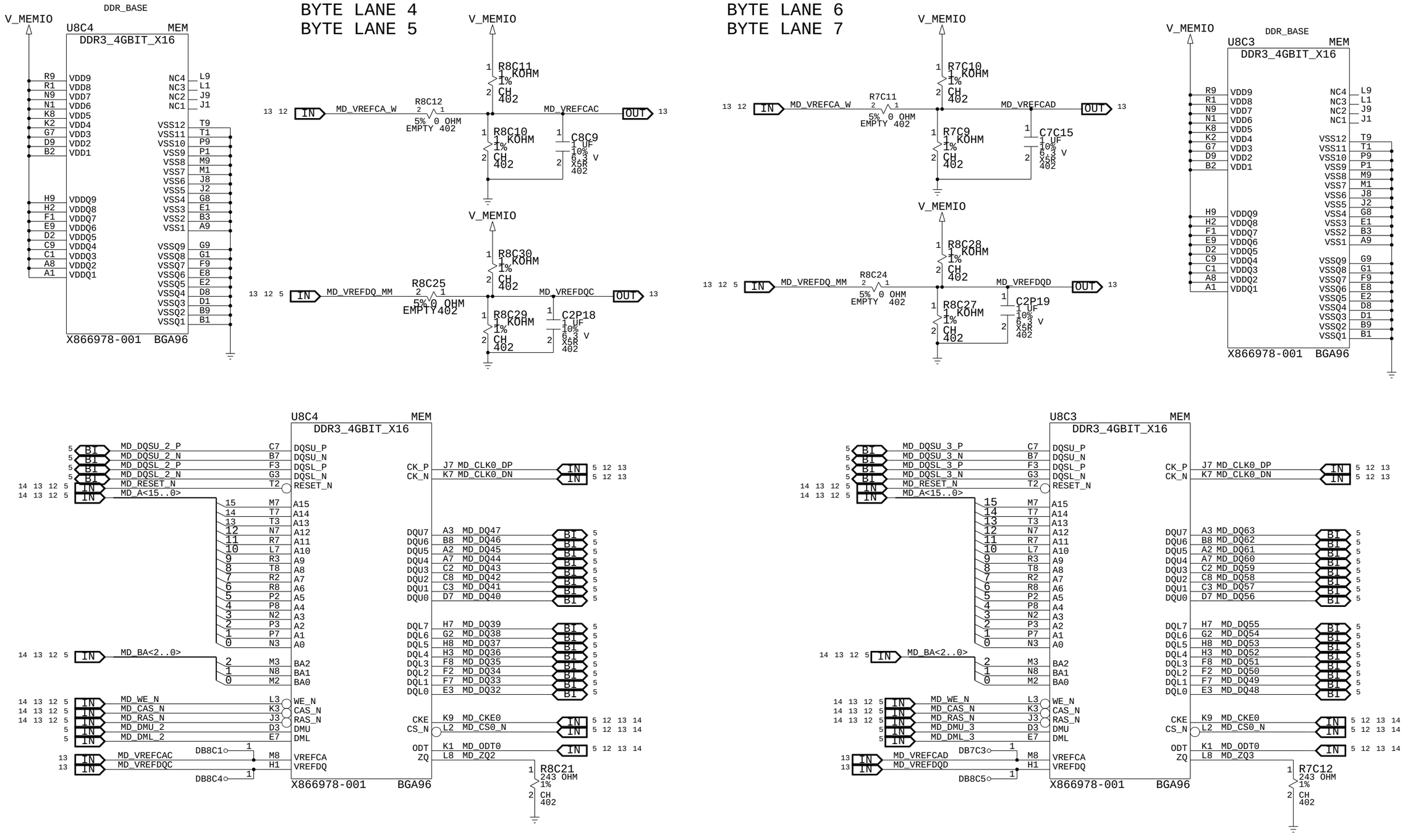

MICROSOFT CONFIDENTIAL	PROJECT NAME	PAGE	CSA PAGE	FAB	VER
	Kingston	13/72	13/72	G	1.01

MEMORY: CHANNEL D,DECOUPLING & TERMINATION

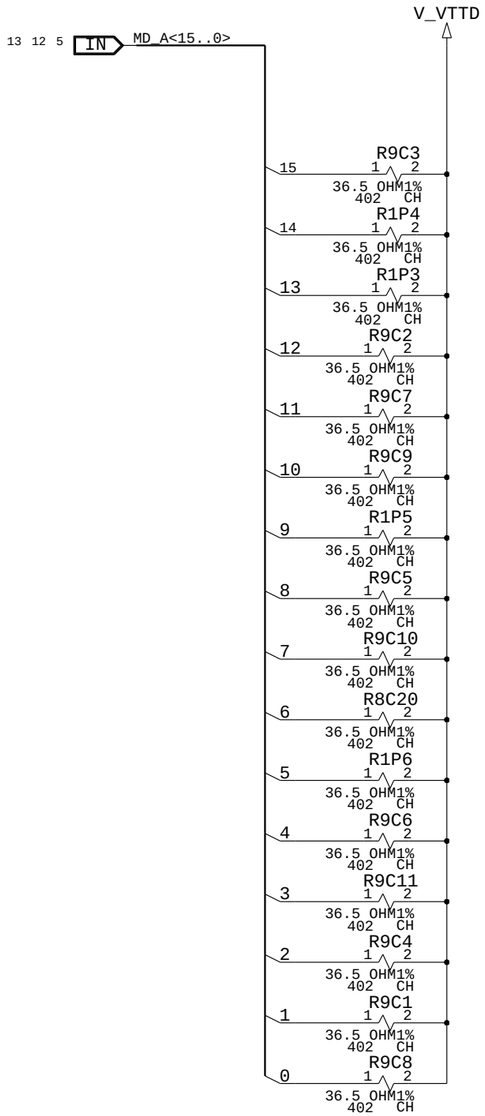

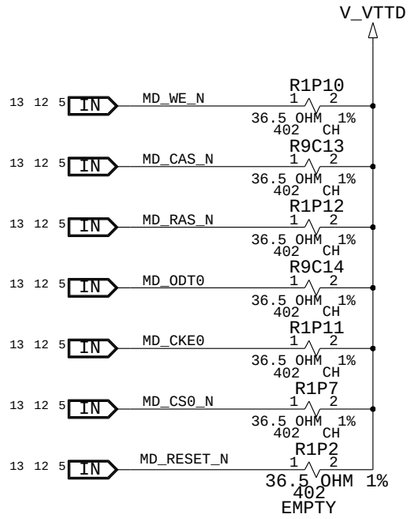

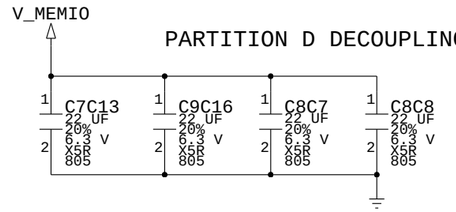

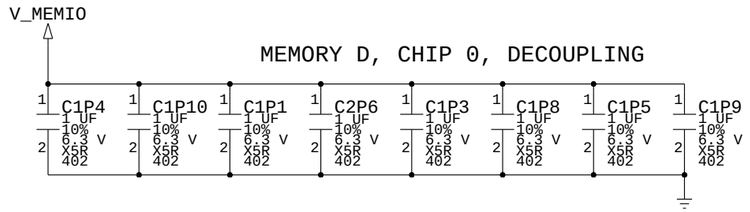

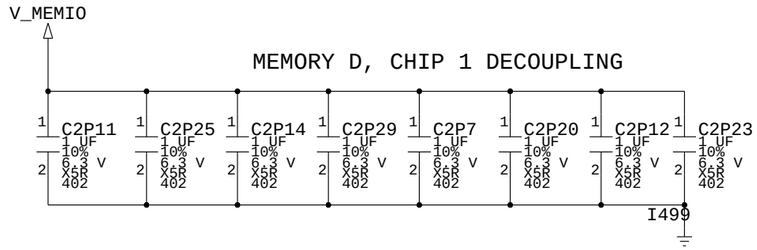

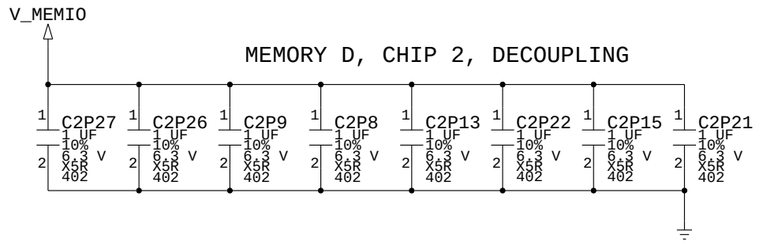

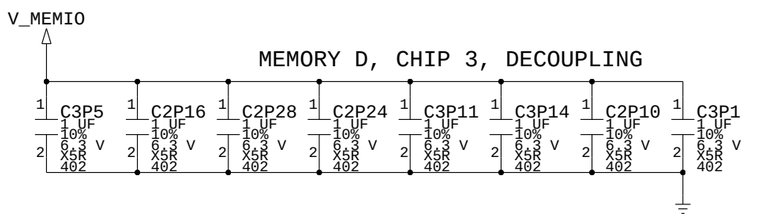

MS_PART#	MATL	REF_DES	DESCR.	BOM PROPERTY
X903915-001	IC	U9C1,U8C5,U8C4,U8C3,U7C2,U7C1,U6D2,U6D3	MEM,SM,4GB,DDR3,E-DIE,20NM,2133MHZ,96FBGA,K4W4G1646E-BC1A,TYP,SAMSUNG	DDR_SAMSUNG
X903915-001	IC	U9F5,U8F3,U8F2,U8F1,U7F2,U7F1,U6E5,U6E3	MEM,SM,4GB,DDR3,E-DIE,20NM,2133MHZ,96FBGA,K4W4G1646E-BC1A,TYP,SAMSUNG	DDR_SAMSUNG
X903814-001	IC	U9C1,U8C5,U8C4,U8C3,U7C2,U7C1,U6D2,U6D3	MEM,SM,4GB,DDR3,POLARIS,25NM,2133MHZ,FBGA96,H5TQ4G63CFR-TEC,TYP,HYNIX	DDR_HYNIX_25NM
X903814-001	IC	U9F5,U8F3,U8F2,U8F1,U7F2,U7F1,U6E5,U6E3	MEM,SM,4GB,DDR3,POLARIS,25NM,2133MHZ,FBGA96,H5TQ4G63CFR-TEC,TYP,HYNIX	DDR_HYNIX_25NM
X945095-001	IC	U9C1,U8C5,U8C4,U8C3,U7C2,U7C1,U6D2,U6D3	MEM,SM,4GB,256X16,DDR3,96 FBGA,NT5CB256M16DP-FL,TYP	DDR_NANYA_30NM
X945095-001	IC	U9F5,U8F3,U8F2,U8F1,U7F2,U7F1,U6E5,U6E3	MEM,SM,4GB,256X16,DDR3,96 FBGA,NT5CB256M16DP-FL,TYP	DDR_NANYA_30NM

MICROSOFT CONFIDENTIAL	PROJECT NAME	PAGE	CSA PAGE	FAB	VER
	Kingston	14/72	14/72	G	1.01

MEMORY: CHANNEL C

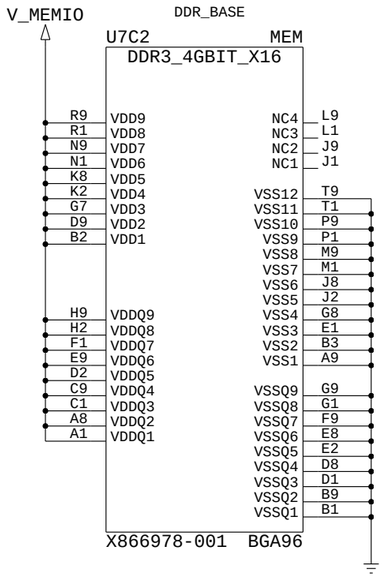

BYTE LANE 0
BYTE LANE 1

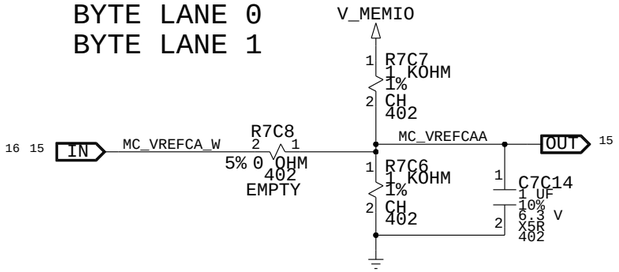

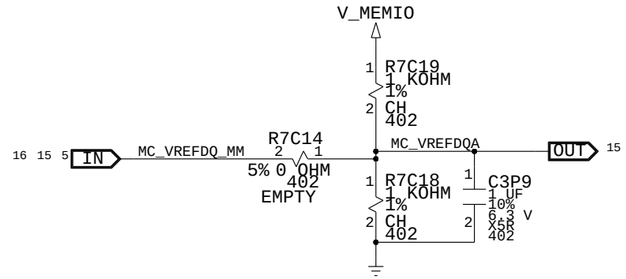

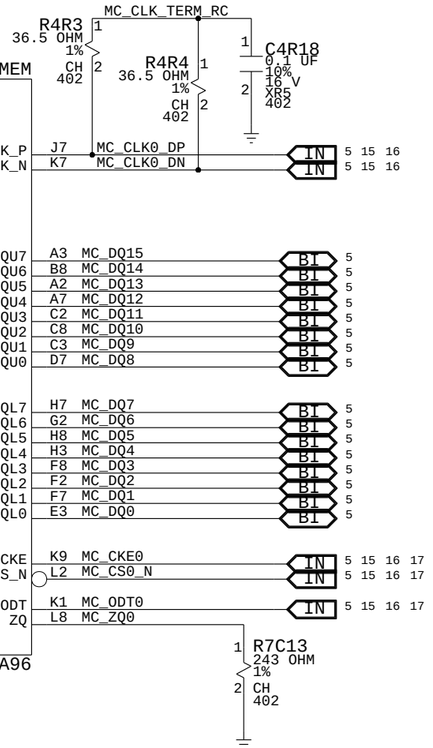

BYTE LANE 2
BYTE LANE 3

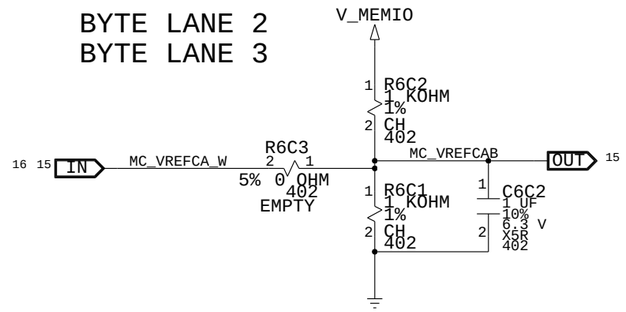

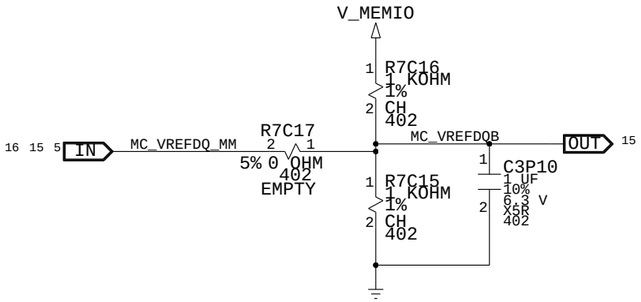

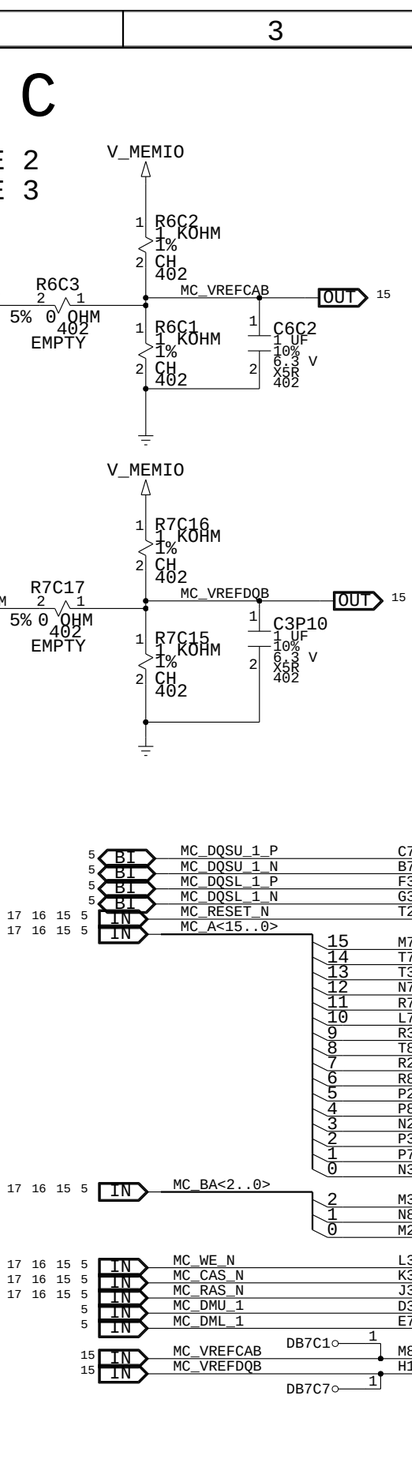

MICROSOFT CONFIDENTIAL	PROJECT NAME	PAGE	CSA PAGE	FAB	VER
	Kingston	15/72	15/72	G	1.01

MEMORY: CHANNEL C

BYTE LANE 4
BYTE LANE 5

BYTE LANE 6
BYTE LANE 7

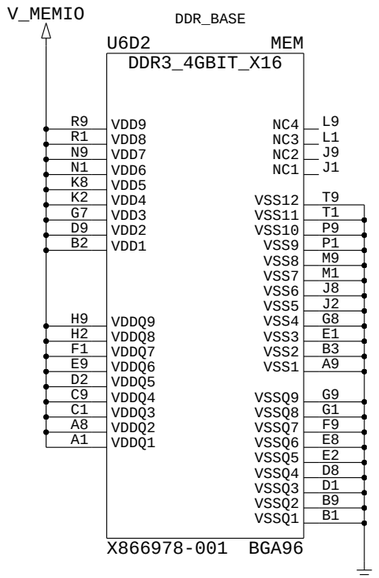

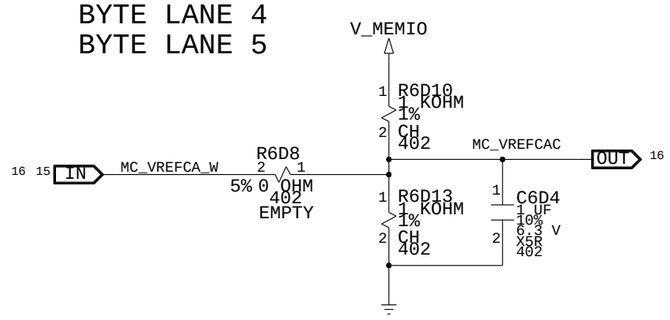

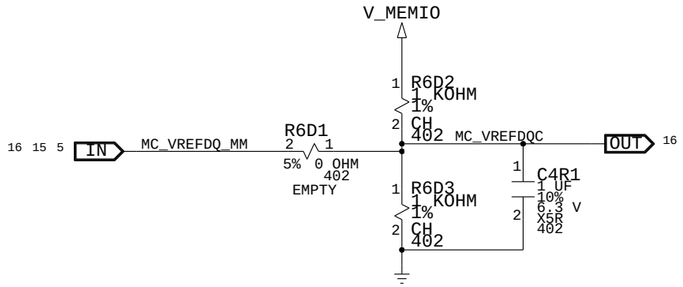

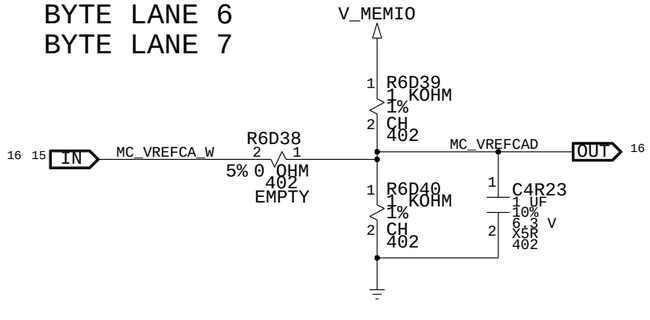

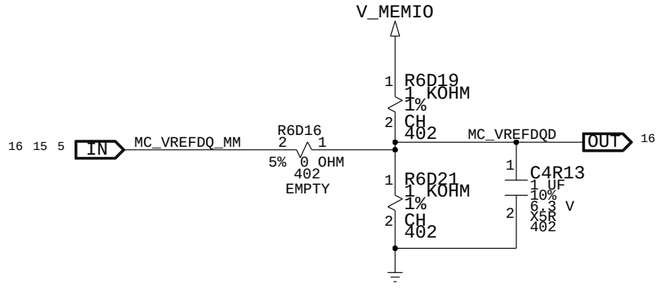

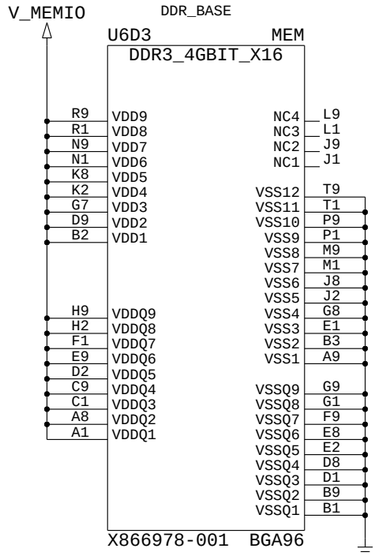

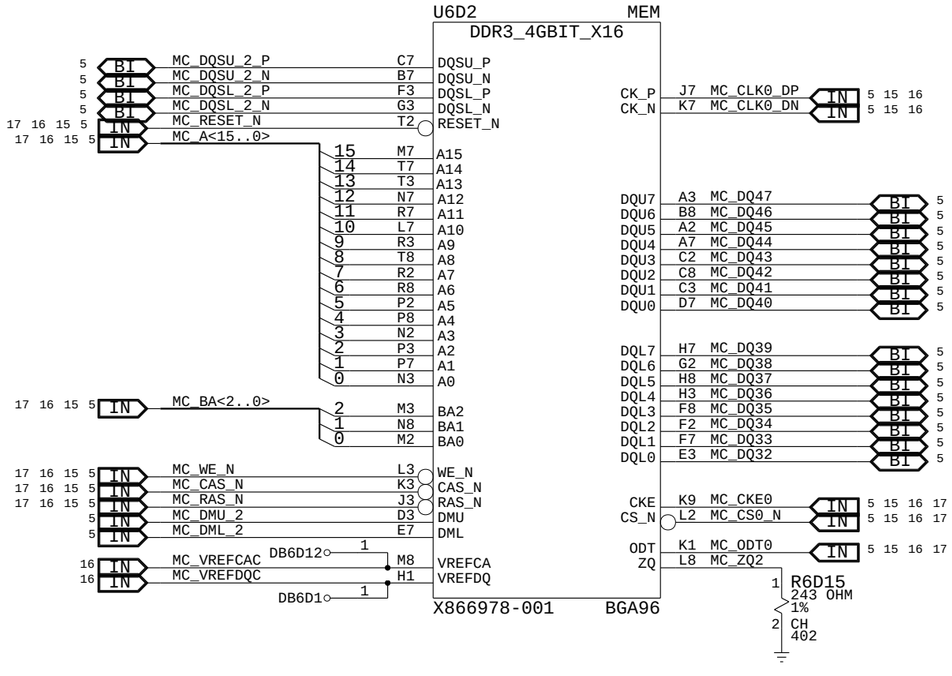

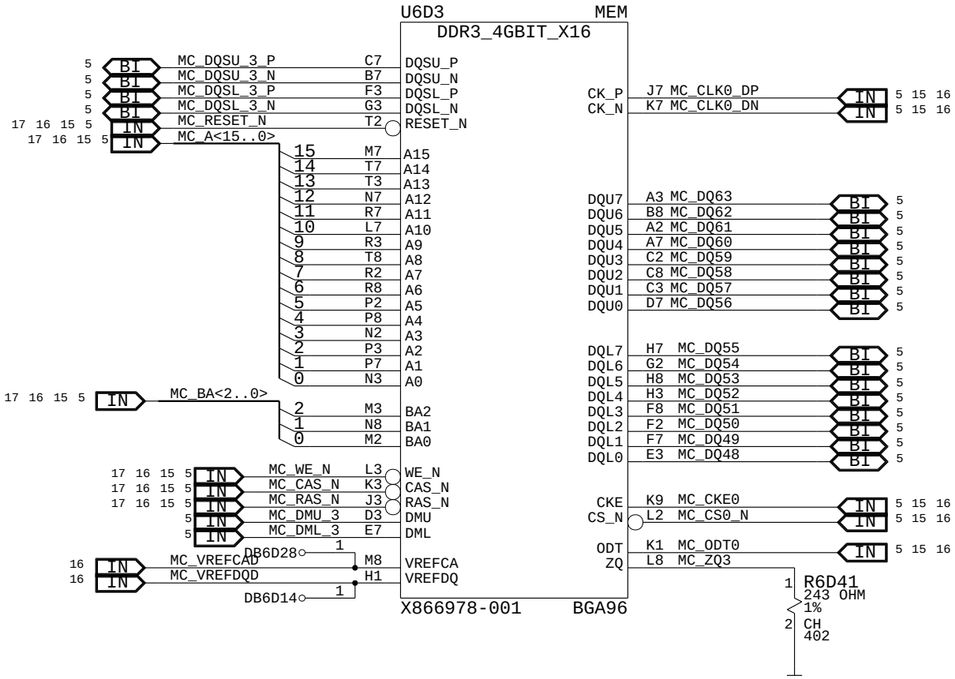

MICROSOFT CONFIDENTIAL	PROJECT NAME	PAGE	CSA PAGE	FAB	VER
	Kingston	16/72	16/72	G	1.01

MEMORY: CHANNEL C,DECOUPLING & TERMINATION

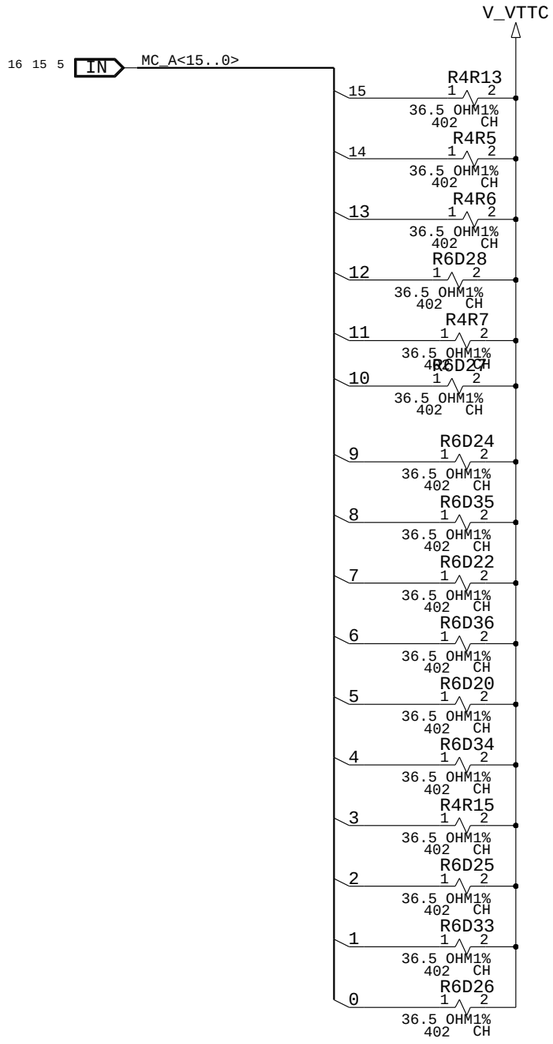

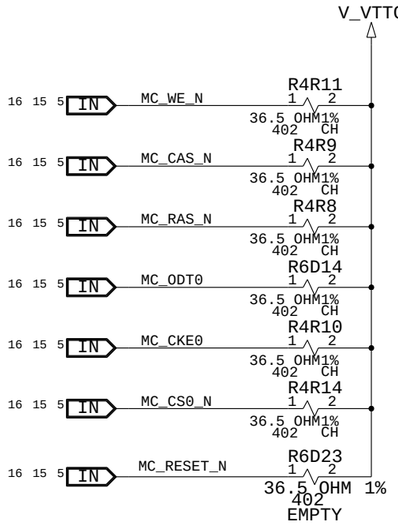

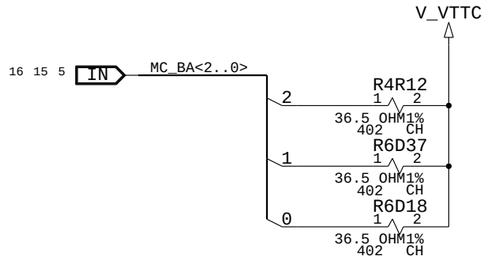

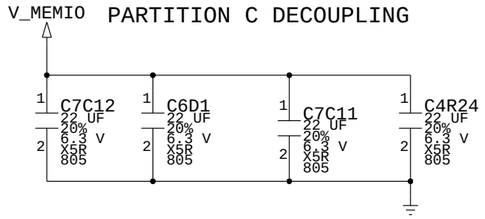

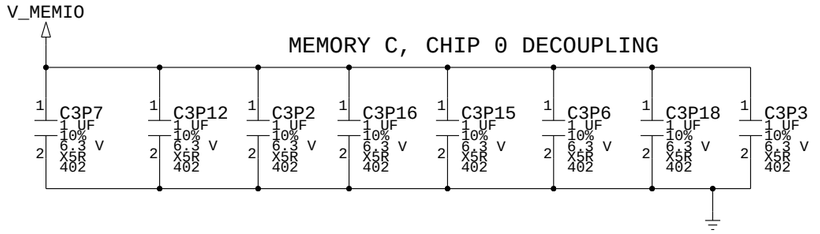

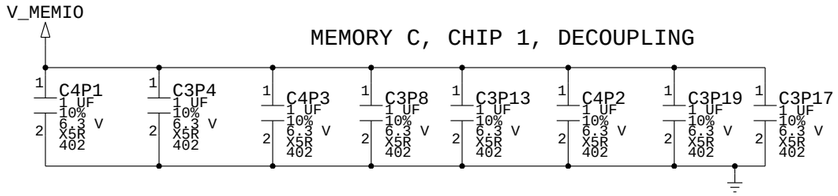

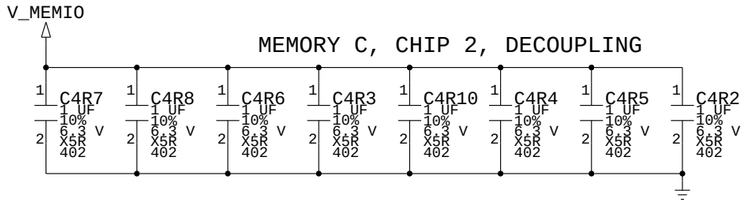

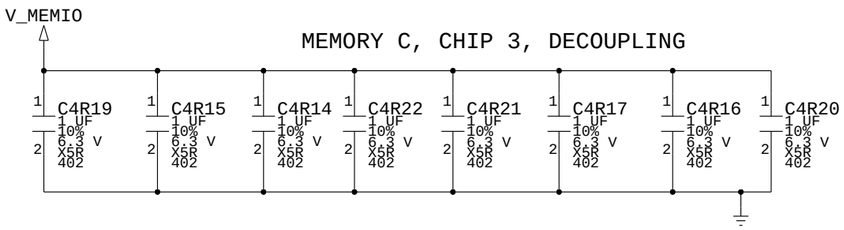

MICROSOFT CONFIDENTIAL	PROJECT NAME	PAGE	CSA PAGE	FAB	VER
	Kingston	17/72	17/72	G	1.01

MEMORY: CHANNEL B

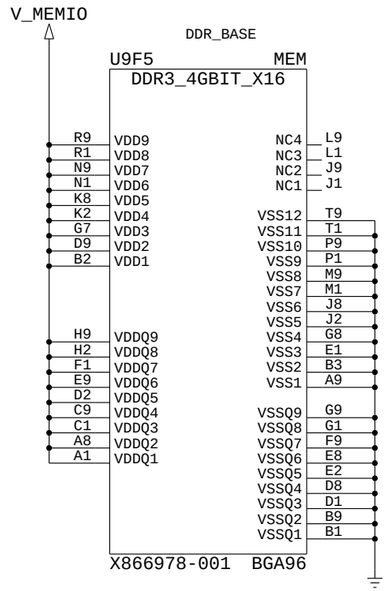

BYTE LANE 0
BYTE LANE 1

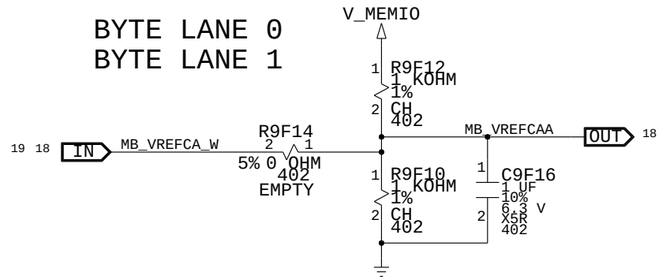

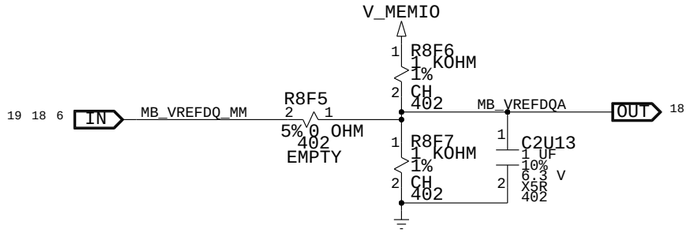

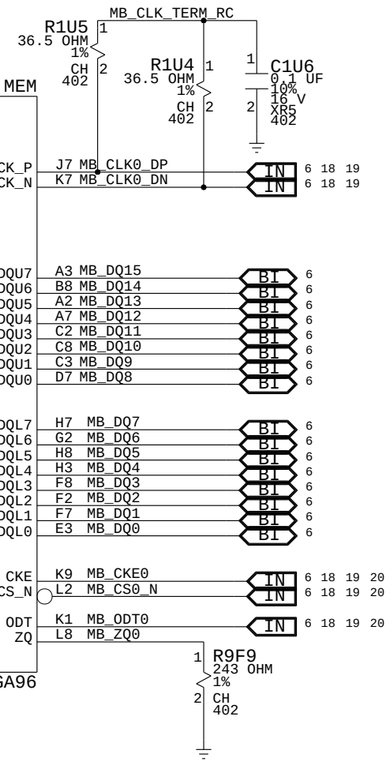

BYTE LANE 2
BYTE LANE 3

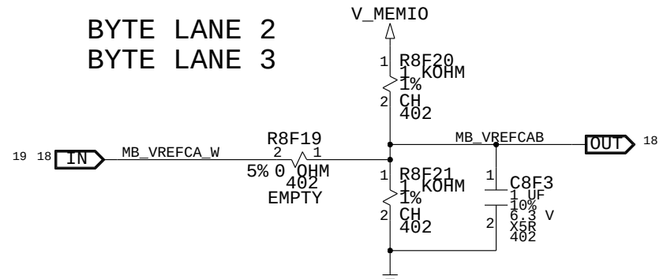

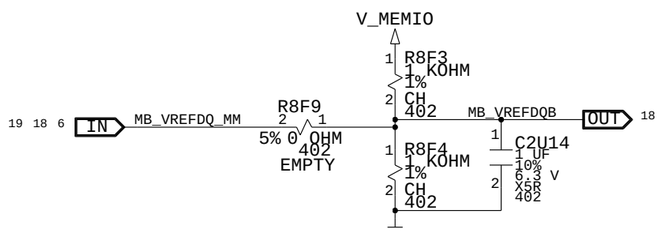

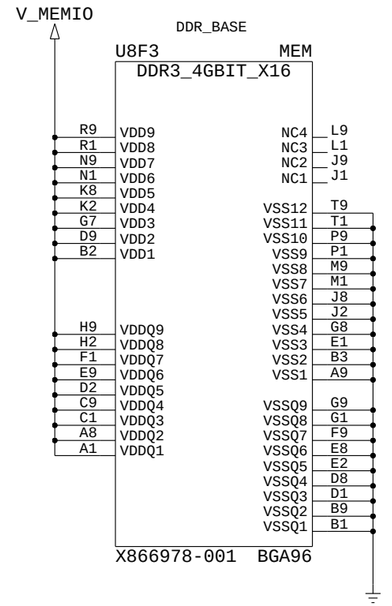

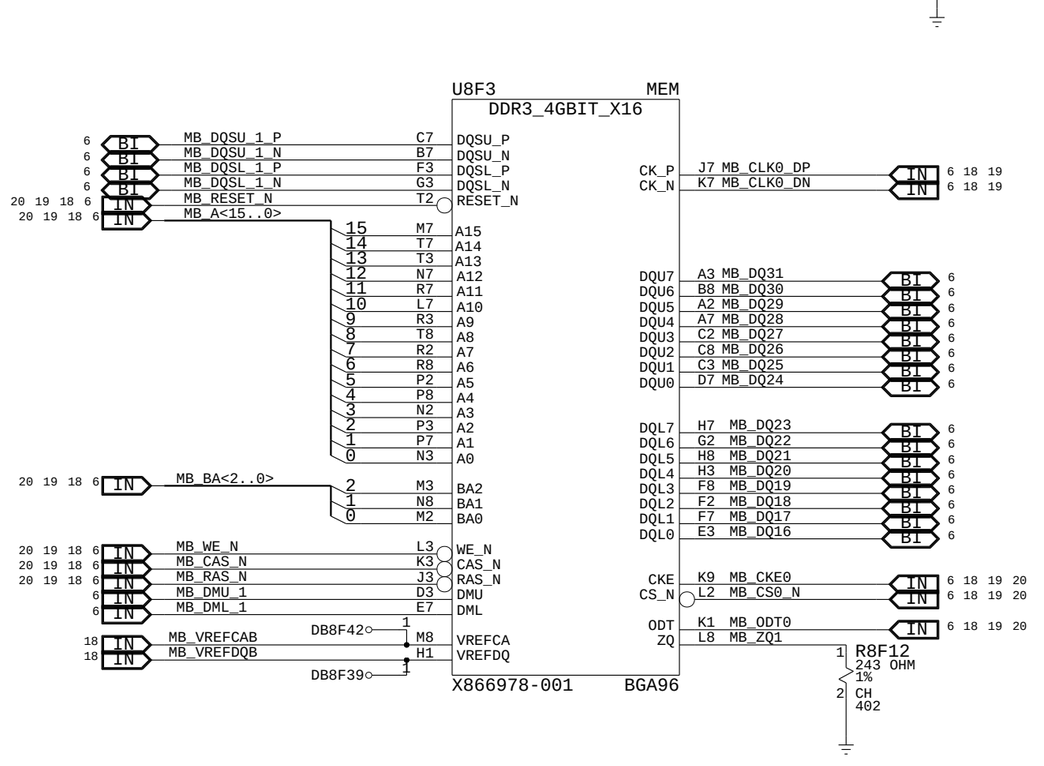

MICROSOFT CONFIDENTIAL	PROJECT NAME	PAGE	CSA PAGE	FAB	VER
	Kingston	18/72	18/72	G	1.01

MEMORY: CHANNEL B

BYTE LANE 4
BYTE LANE 5

BYTE LANE 6
BYTE LANE 7

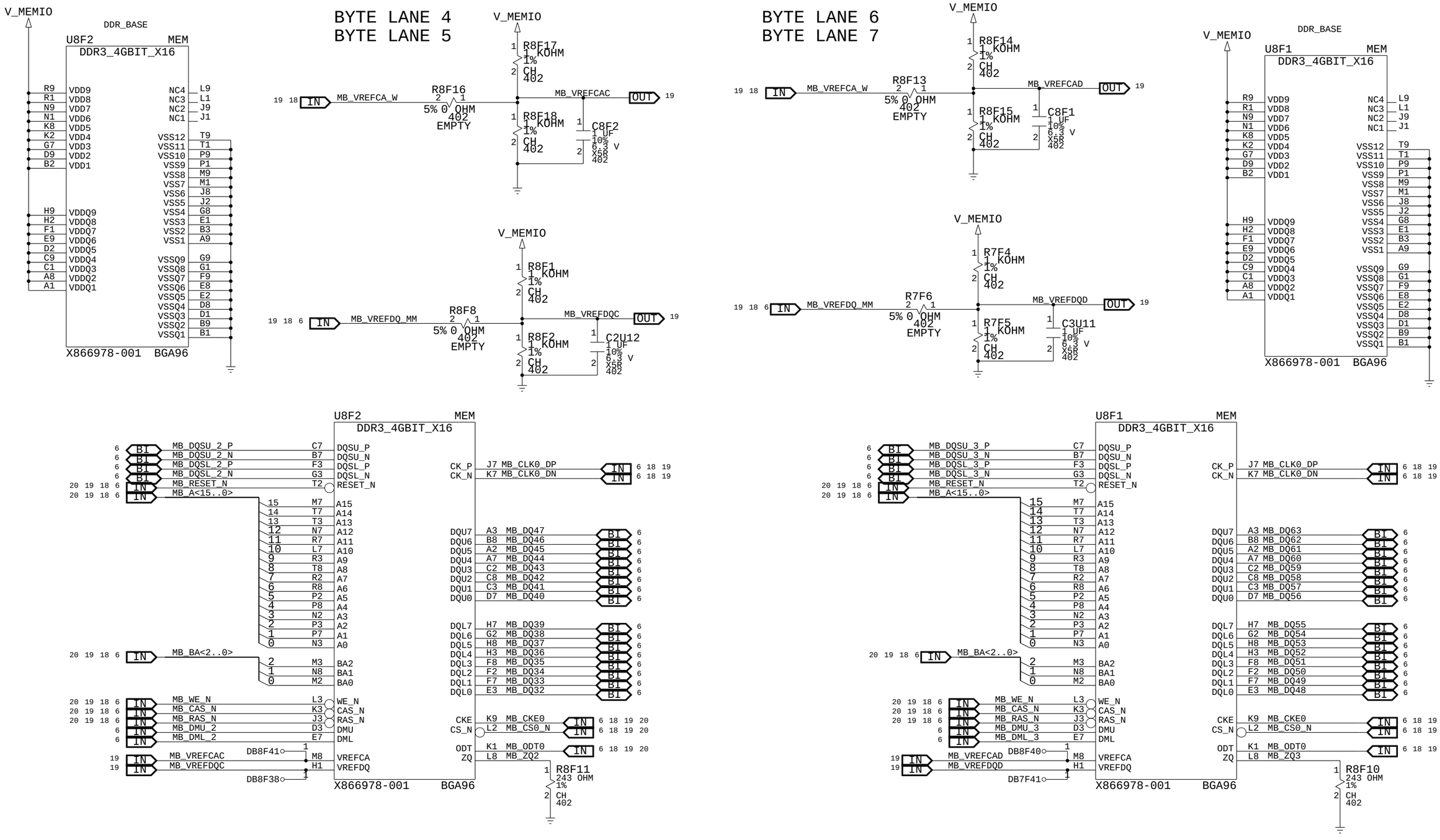

MICROSOFT CONFIDENTIAL	PROJECT NAME	PAGE	CSA PAGE	FAB	VER
	Kingston	19/72	19/72	G	1.01

MEMORY: CHANNEL B,DECOUPLING & TERMINATION

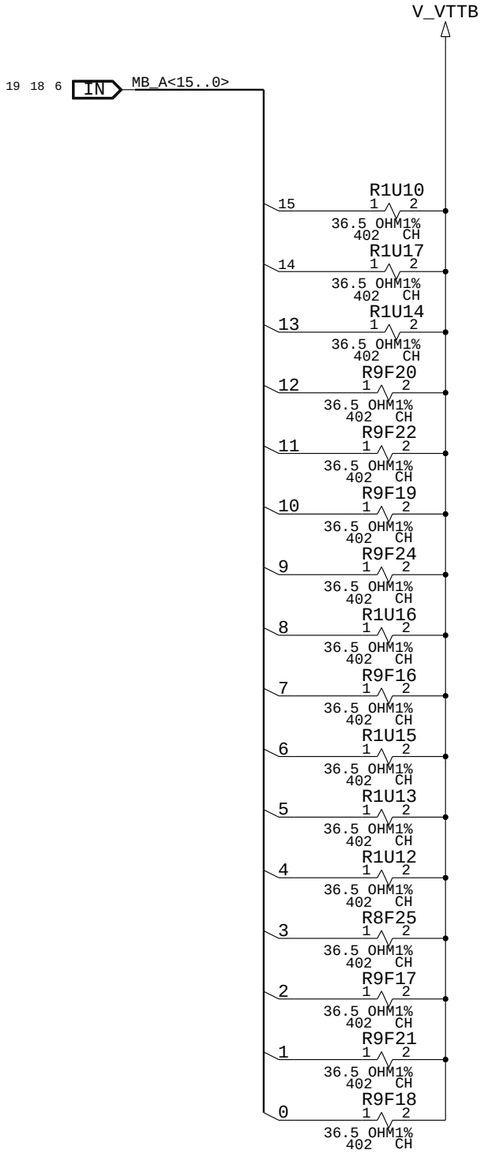

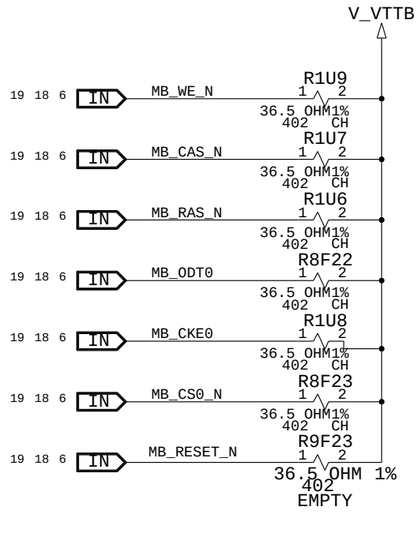

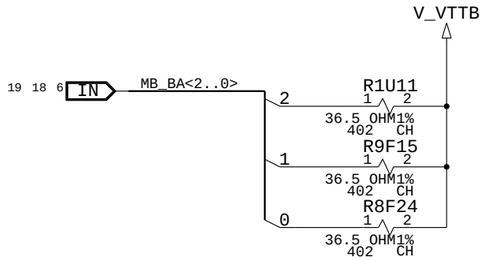

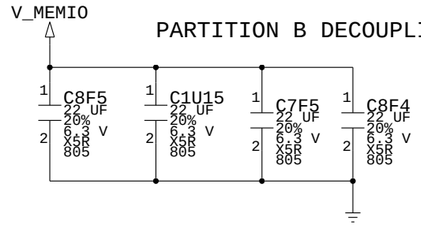

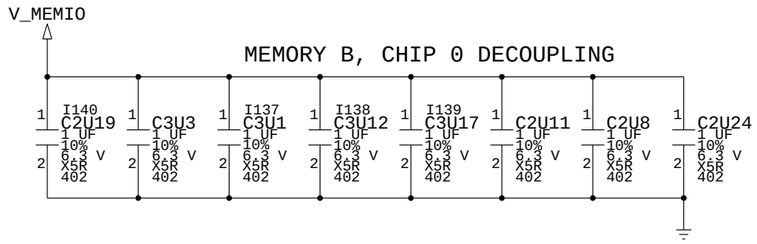

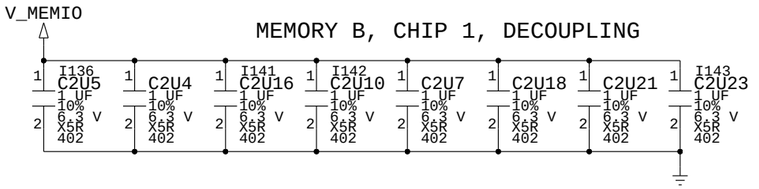

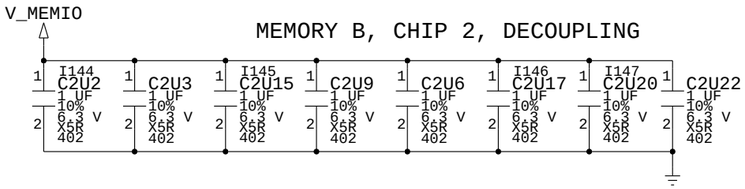

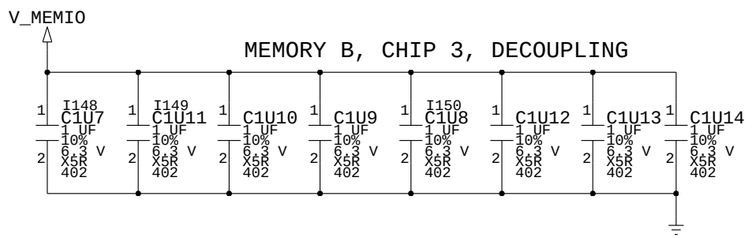

MICROSOFT CONFIDENTIAL	PROJECT NAME	PAGE	CSA PAGE	FAB	VER
	Kingston	20/72	20/72	G	1.01

MEMORY: CHANNEL A

BYTE LANE 0
BYTE LANE 1

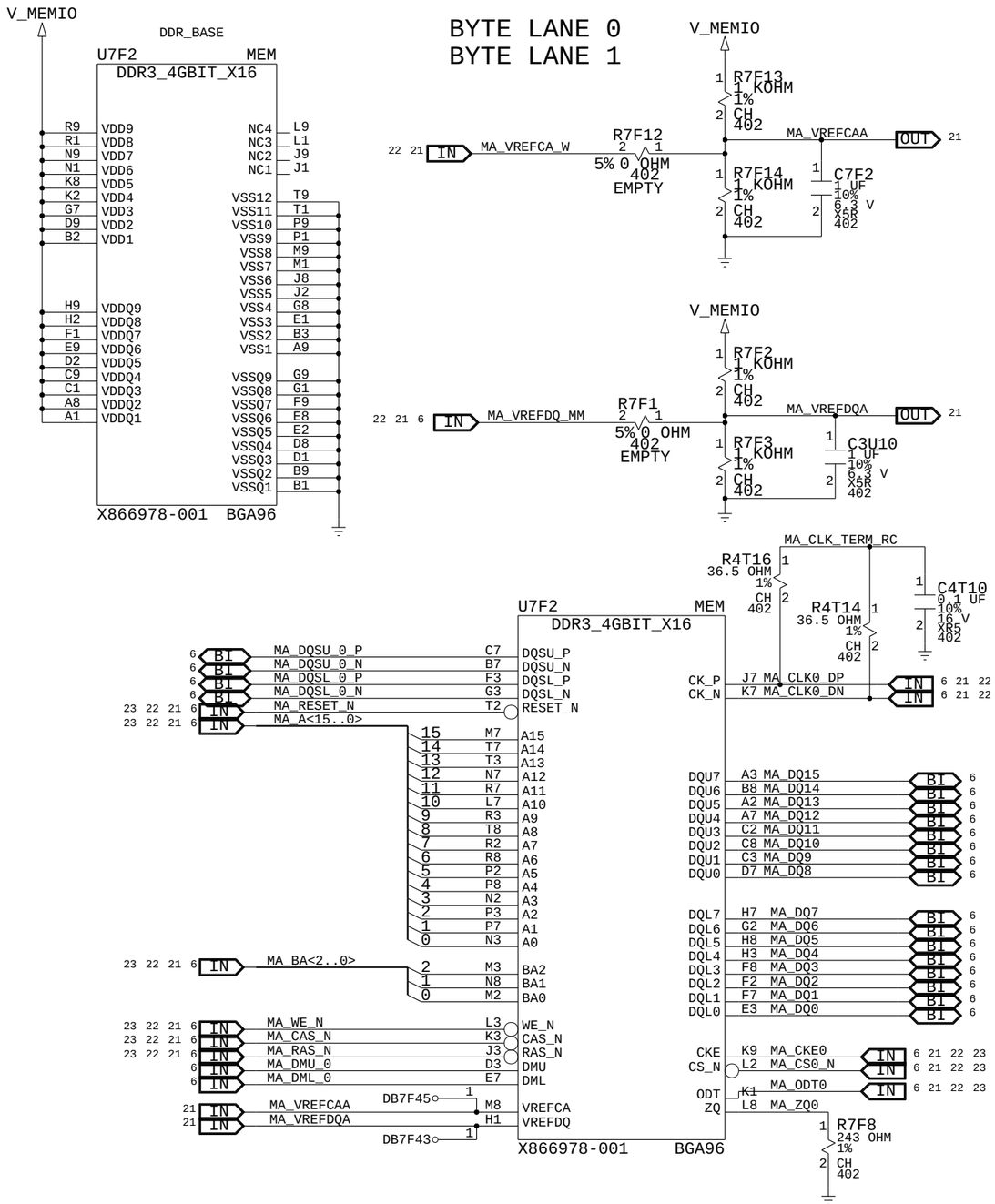

BYTE LANE 2
BYTE LANE 3

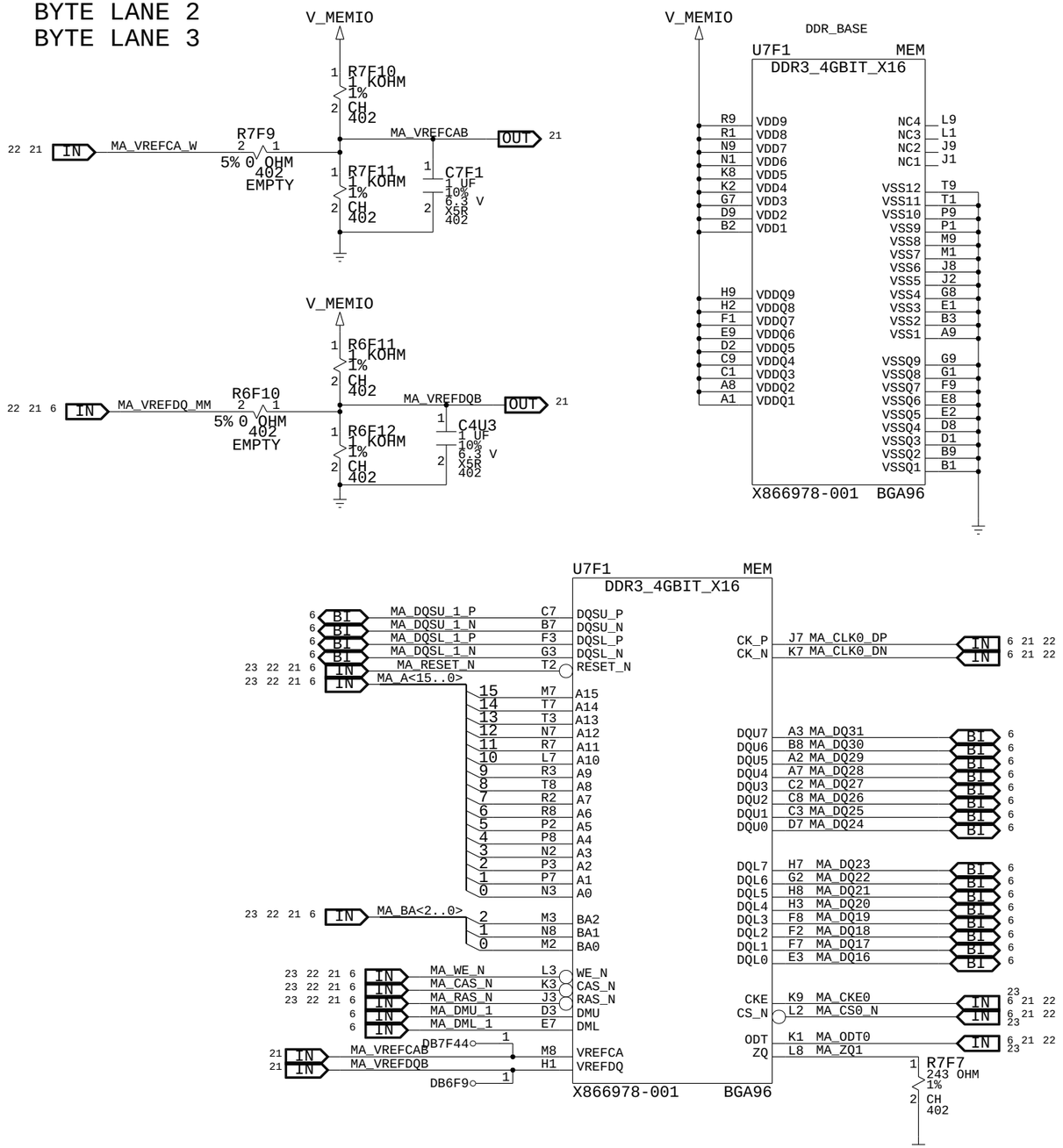

MICROSOFT CONFIDENTIAL	PROJECT NAME	PAGE	CSA PAGE	FAB	VER
	Kingston	21/72	21/72	G	1.01

MEMORY: CHANNEL A

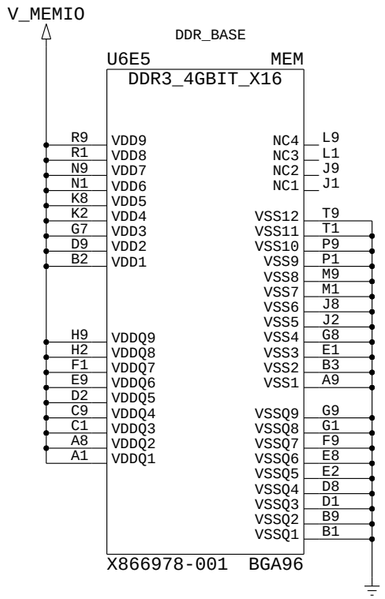

BYTE LANE 4
BYTE LANE 5

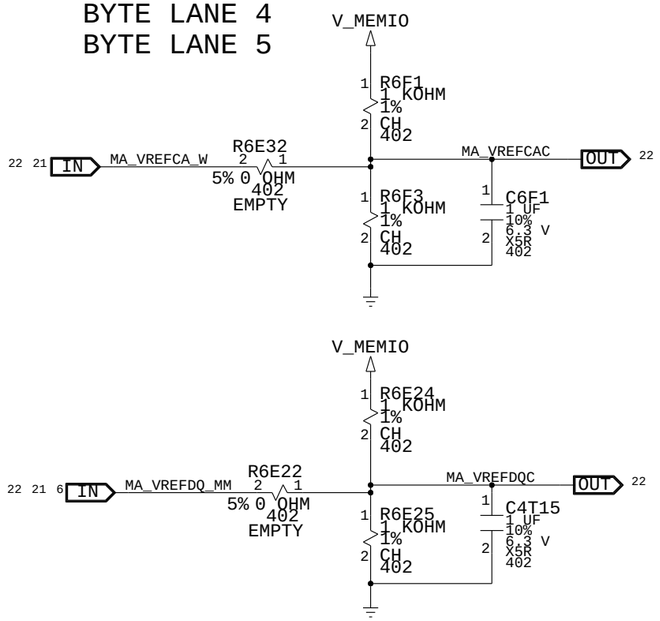

BYTE LANE 6
BYTE LANE 7

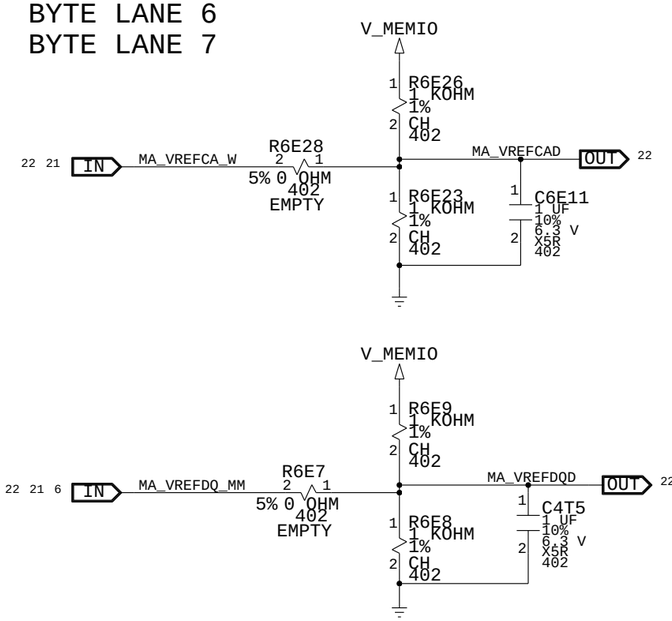

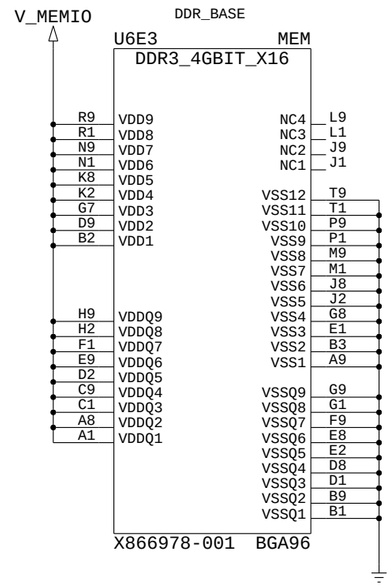

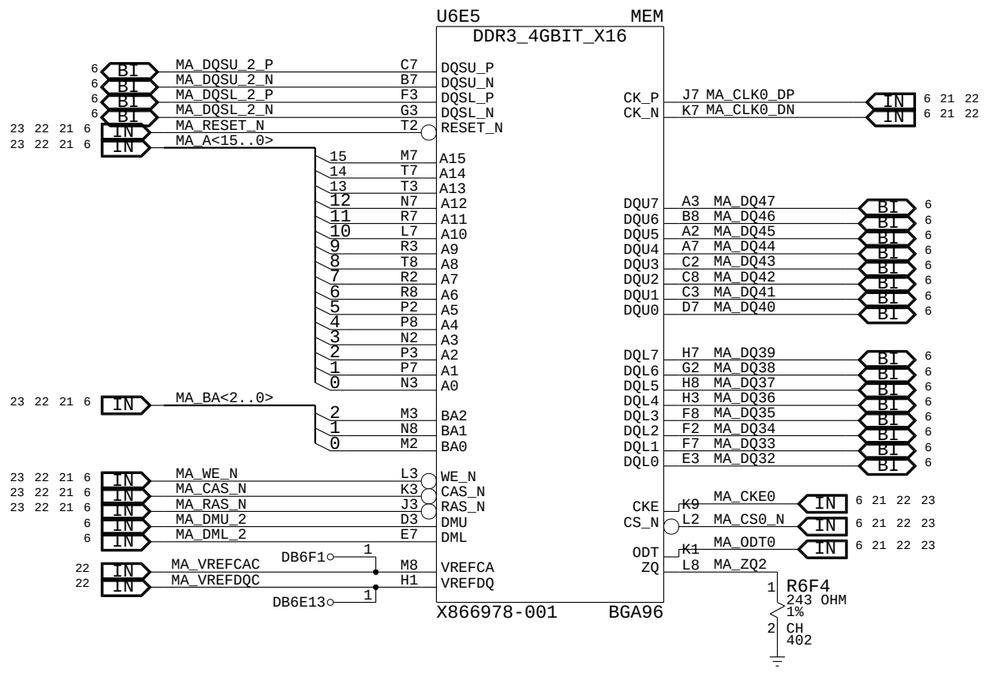

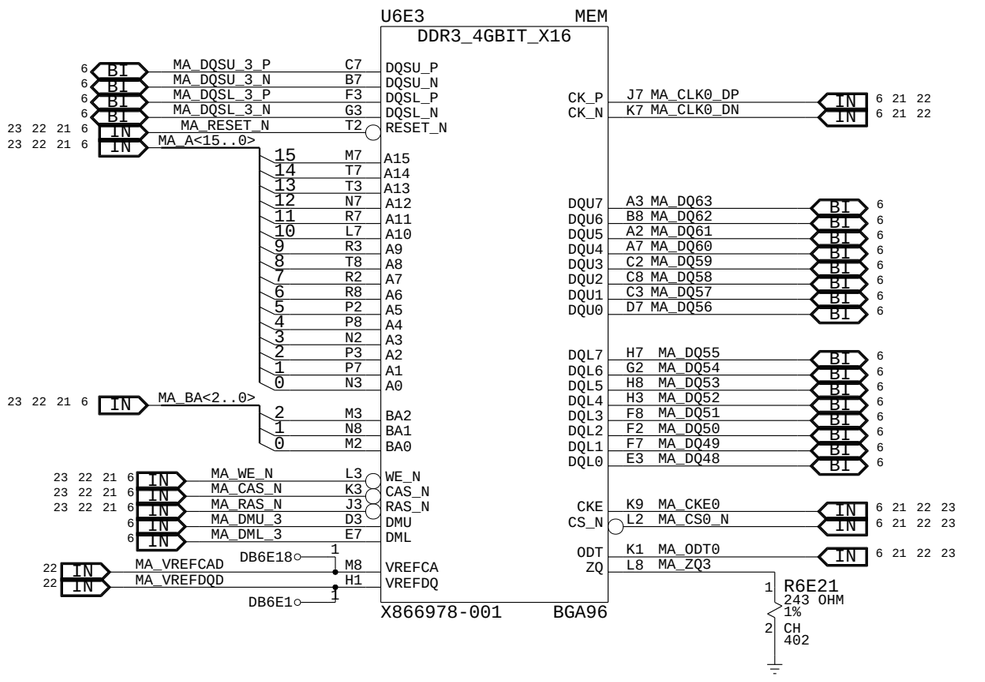

MICROSOFT CONFIDENTIAL	PROJECT NAME	PAGE	CSA PAGE	FAB	VER
	Kingston	22/72	22/72	G	1.01

MEMORY: CHANNEL A,DECOUPLING & TERMINATION

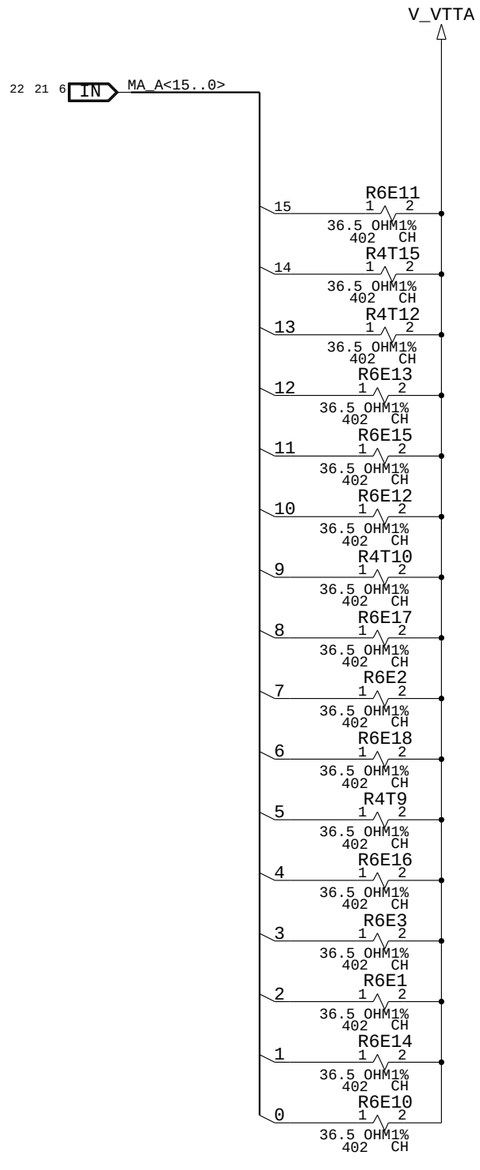

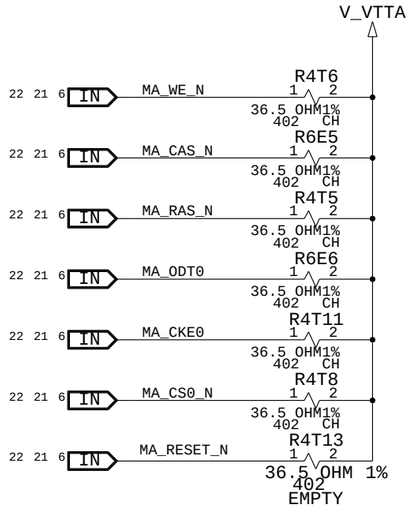

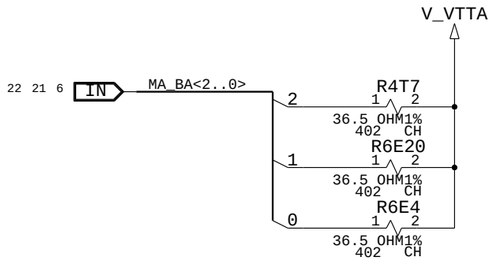

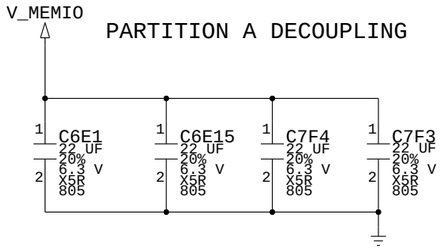

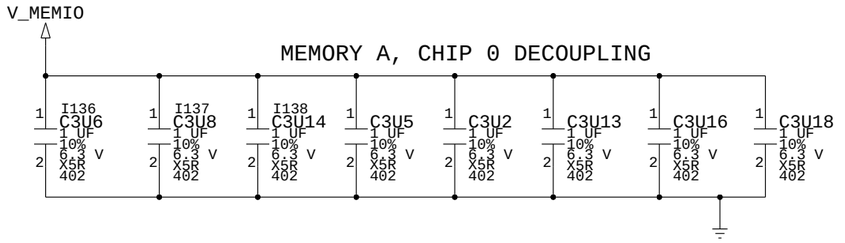

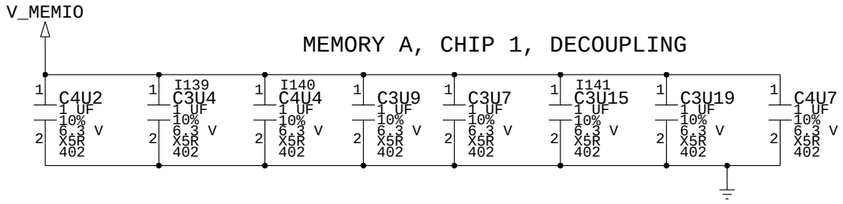

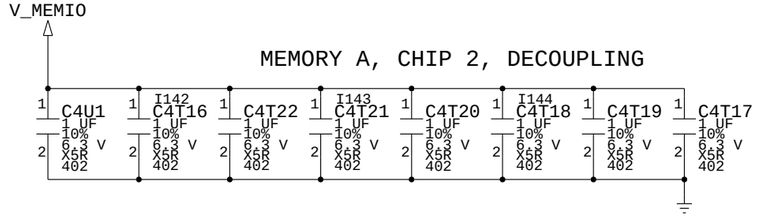

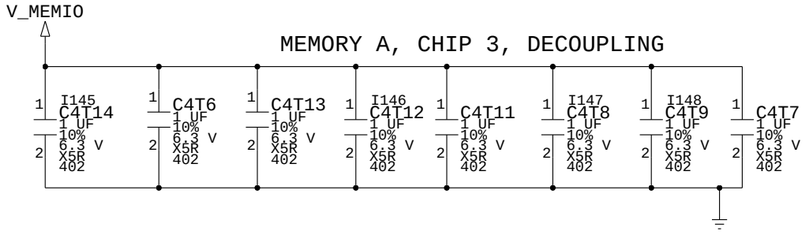

MICROSOFT CONFIDENTIAL	PROJECT NAME	PAGE	CSA PAGE	FAB	VER
	Kingston	23/72	23/72	G	1.01

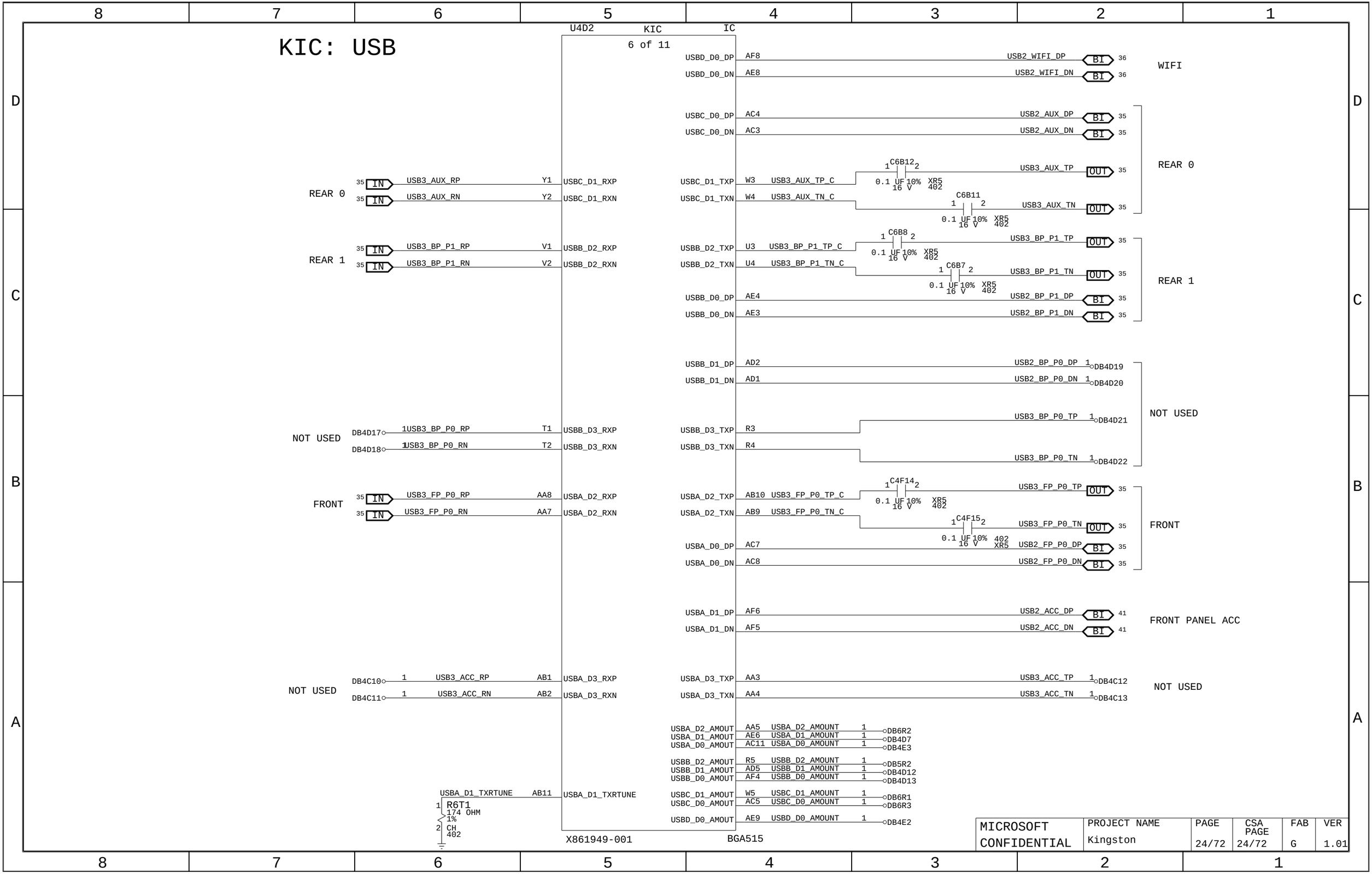
KIC: USB
U4D2
KIC
IC
6 of 11
USBD_D0_DP AF8 USB2_WIFI_DP BI 36
USBD_D0_DN AE8 USB2_WIFI_DN BI 36
WIFI
USBC_D0_DP AC4 USB2_AUX_DP BI 35
USBC_D0_DN AC3 USB2_AUX_DN BI 35
REAR 0
35 IN USB3_AUX_RP Y1 USBC_D1_RXP
35 IN USB3_AUX_RN Y2 USBC_D1_RXN
USBC_D1_TXP W3 USB3_AUX_TP_C
USBC_D1_TXN W4 USB3_AUX_TN_C
C6B12 0.1 UF 16 V 10% XR5 402
C6B11 0.1 UF 16 V 10% XR5 402
USB3_AUX_TP OUT 35
USB3_AUX_TN OUT 35
REAR 0
REAR 1
35 IN USB3_BP_P1_RP V1 USBB_D2_RXP
35 IN USB3_BP_P1_RN V2 USBB_D2_RXN
USBB_D2_TXP U3 USB3_BP_P1_TP_C
USBB_D2_TXN U4 USB3_BP_P1_TN_C
C6B8 0.1 UF 16 V 10% XR5 402
C6B7 0.1 UF 16 V 10% XR5 402
USB3_BP_P1_TP OUT 35
USB3_BP_P1_TN OUT 35
USBB_D0_DP AE4 USB2_BP_P1_DP BI 35
USBB_D0_DN AE3 USB2_BP_P1_DN BI 35
REAR 1
USBB_D1_DP AD2 USB2_BP_P0_DP 1 DB4D19
USBB_D1_DN AD1 USB2_BP_P0_DN 1 DB4D20
NOT USED
DB4D17 1 USB3_BP_P0_RP T1 USBB_D3_RXP
DB4D18 1 USB3_BP_P0_RN T2 USBB_D3_RXN
USBB_D3_TXP R3 USB3_BP_P0_TP 1 DB4D21
USBB_D3_TXN R4 USB3_BP_P0_TN 1 DB4D22
NOT USED
FRONT
35 IN USB3_FP_P0_RP AA8 USBA_D2_RXP
35 IN USB3_FP_P0_RN AA7 USBA_D2_RXN
USBA_D2_TXP AB10 USB3_FP_P0_TP_C
USBA_D2_TXN AB9 USB3_FP_P0_TN_C
C4F14 0.1 UF 16 V 10% XR5 402
C4F15 0.1 UF 16 V 10% 402 XR5
USB3_FP_P0_TP OUT 35
USB3_FP_P0_TN OUT 35
USBA_D0_DP AC7 USB2_FP_P0_DP BI 35
USBA_D0_DN AC8 USB2_FP_P0_DN BI 35
FRONT
USBA_D1_DP AF6 USB2_ACC_DP BI 41
USBA_D1_DN AF5 USB2_ACC_DN BI 41
FRONT PANEL ACC
NOT USED
DB4C10 1 USB3_ACC_RP AB1 USBA_D3_RXP
DB4C11 1 USB3_ACC_RN AB2 USBA_D3_RXN
USBA_D3_TXP AA3 USB3_ACC_TP 1 DB4C12
USBA_D3_TXN AA4 USB3_ACC_TN 1 DB4C13
NOT USED
USBA_D2_AMOUT AA5 USBA_D2_AMOUNT 1 DB6R2
USBA_D1_AMOUT AE6 USBA_D1_AMOUNT 1 DB4D7
USBA_D0_AMOUT AC11 USBA_D0_AMOUNT 1 DB4E3
USBB_D2_AMOUT R5 USBB_D2_AMOUNT 1 DB5R2
USBB_D1_AMOUT AD5 USBB_D1_AMOUNT 1 DB4D12
USBB_D0_AMOUT AF4 USBB_D0_AMOUNT 1 DB4D13
USBA_D1_TXRTUNE AB11 USBA_D1_TXRTUNE
1 R6T1 174 OHM 1% 2 CH 402
USBC_D1_AMOUT W5 USBC_D1_AMOUNT 1 DB6R1
USBC_D0_AMOUT AC5 USBC_D0_AMOUNT 1 DB6R3
USBD_D0_AMOUT AE9 USBD_D0_AMOUNT 1 DB4E2
X861949-001
BGA515
MICROSOFT CONFIDENTIAL
PROJECT NAME Kingston
PAGE 24/72
CSA PAGE 24/72
FAB G
VER 1.01

KIC: PCIEX,SATA,VIDEO

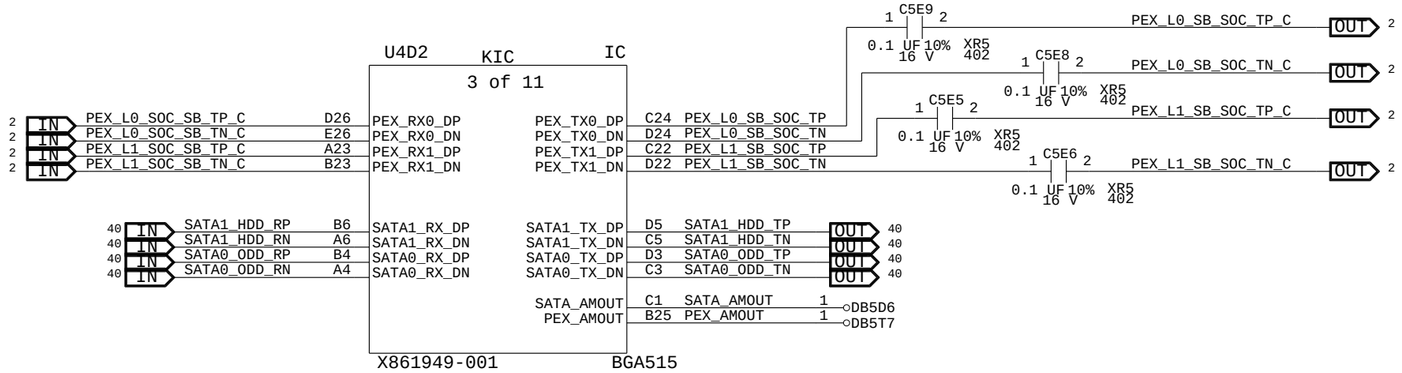

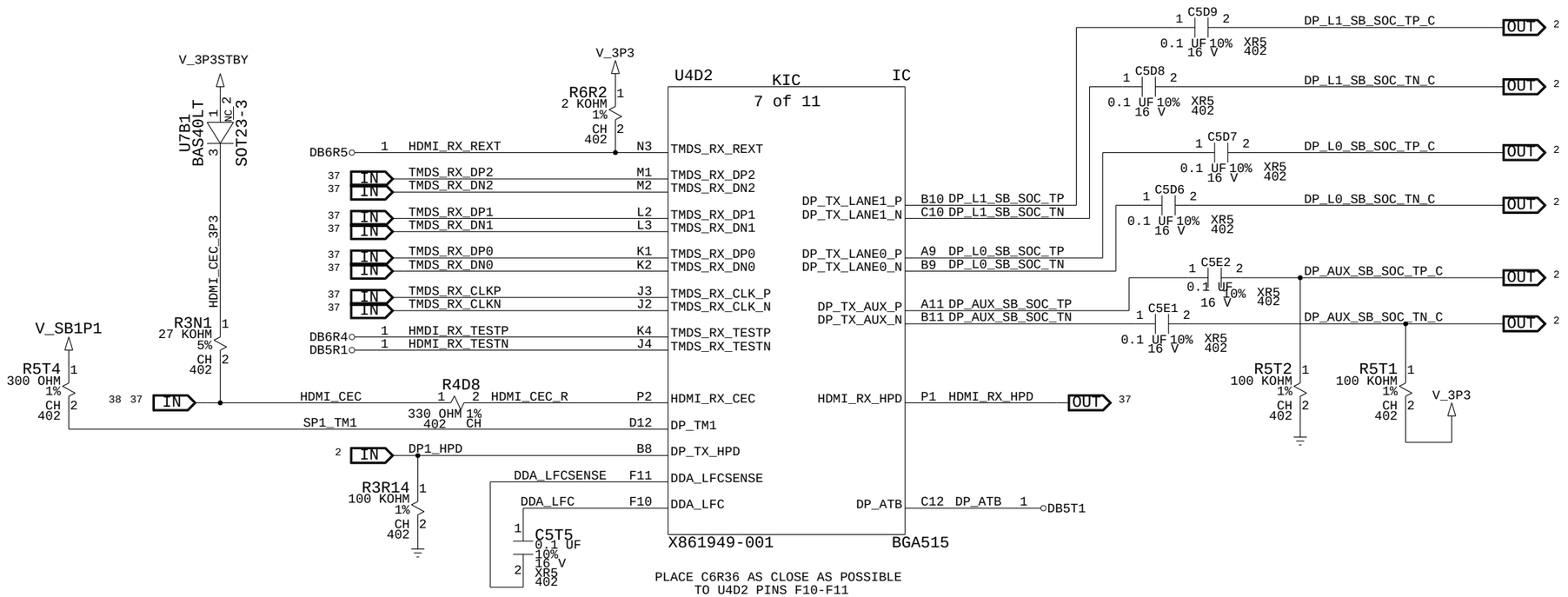

MICROSOFT CONFIDENTIAL	PROJECT NAME	PAGE	CSA PAGE	FAB	VER
	Kingston	25/72	25/72	G	1.01

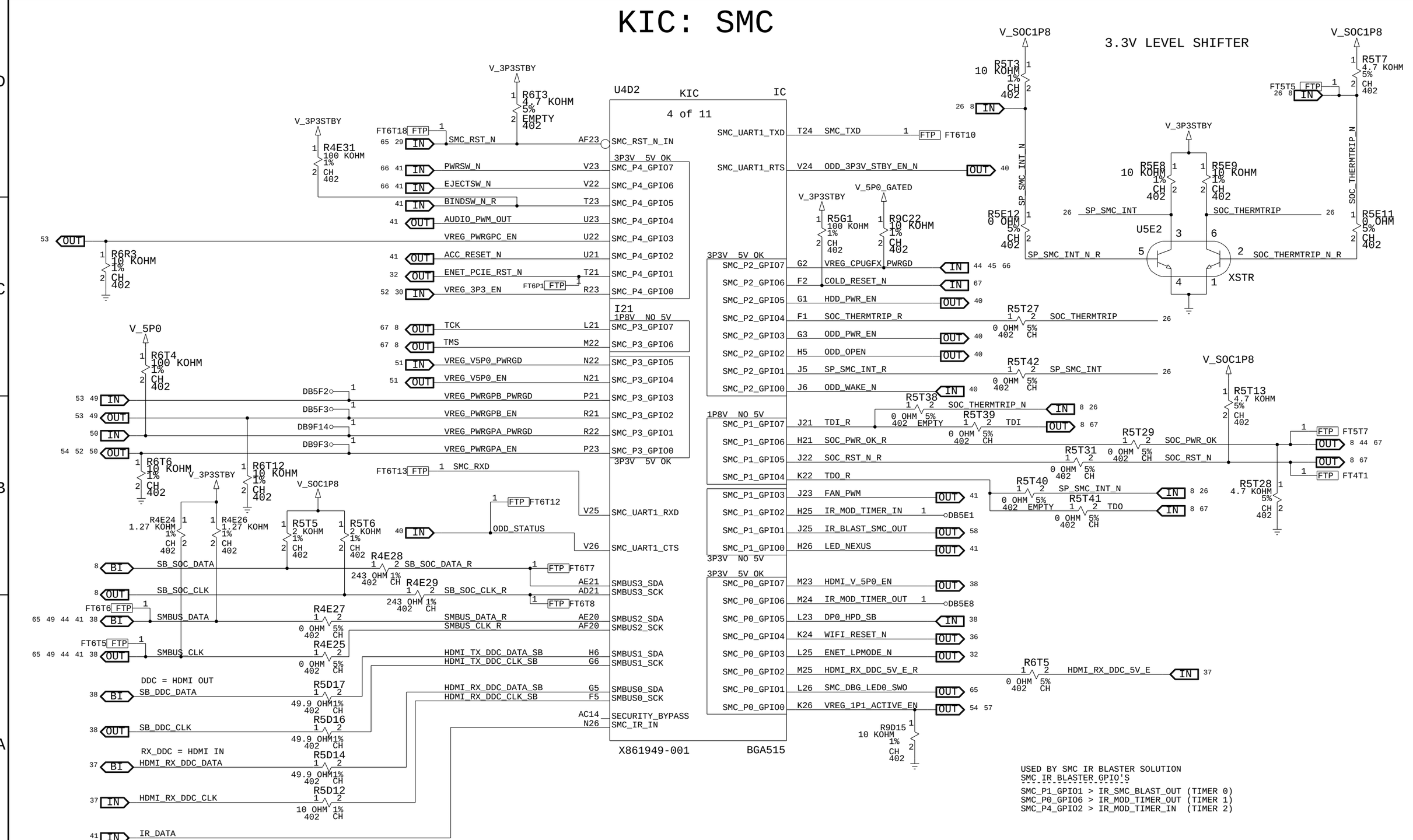

MICROSOFT CONFIDENTIAL	PROJECT NAME	PAGE	CSA PAGE	FAB	VER
	Kingston	26/72	26/72	G	1.01

KIC: FACET

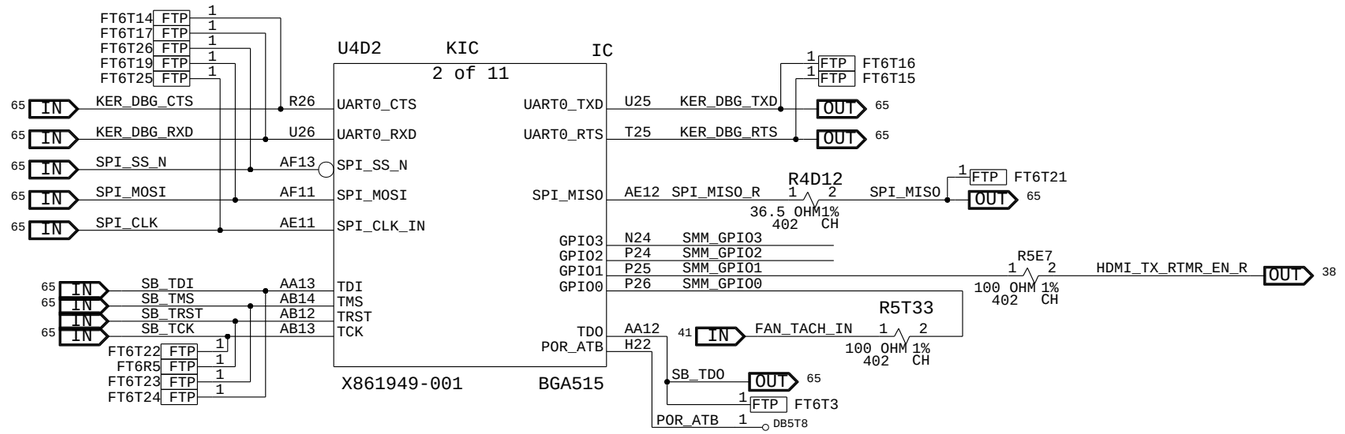

MICROSOFT CONFIDENTIAL	PROJECT NAME	PAGE	CSA PAGE	FAB	VER
	Kingston	27/72	27/72	G	1.01

KIC: POWER

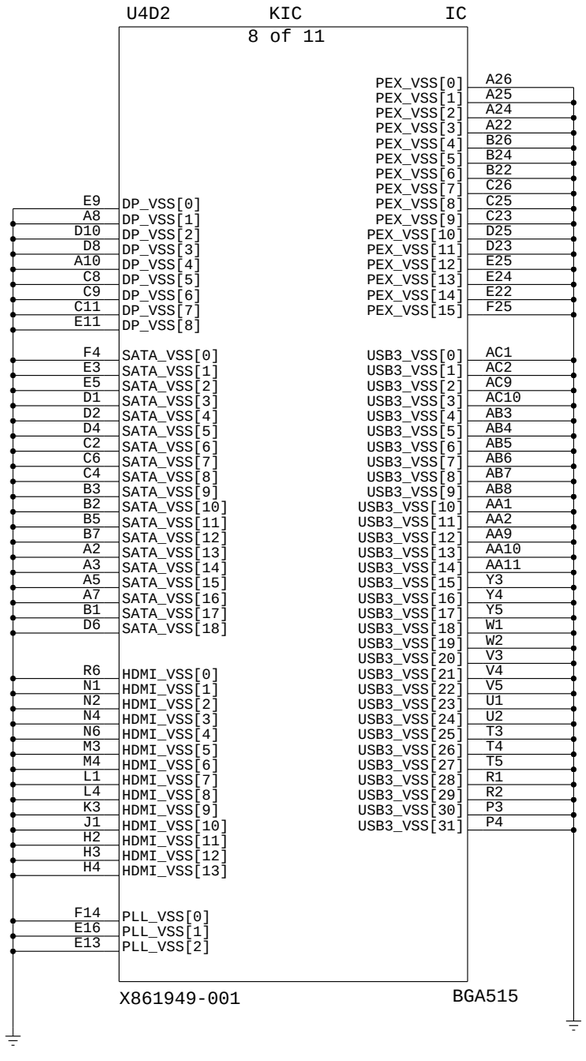

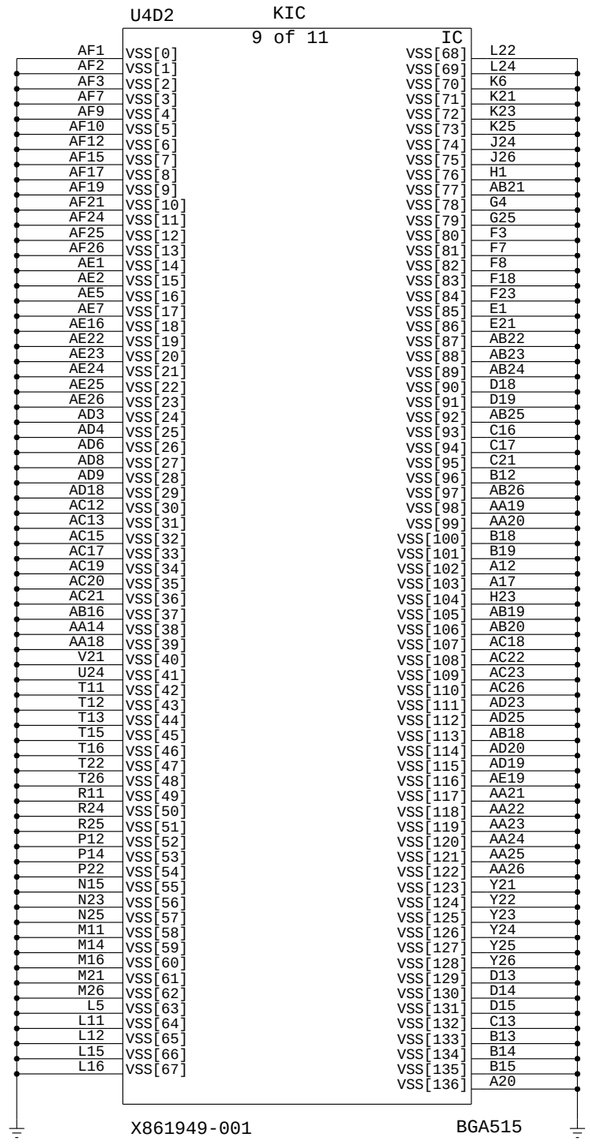

MICROSOFT CONFIDENTIAL	PROJECT NAME	PAGE	CSA PAGE	FAB	VER
	Kingston	28/72	28/72	G	1.01

KIC: CLOCKS,STRAPPING,POR

SEE PAGE 32 FOR ADDITIONAL INFORMATION
100 MHZ CLOCK ENABLE AND ROUTING

32 IN PEX_REF_CLK1_REQN_R

R4B3 0 OHM 5% 402 CH

V_3P3

R4C26 100 KOHM 5% EMPTY 402

R4B10 100 KOHM 5% EMPTY 402

R5T14 100 KOHM 1% CH 402

R5T15 100 KOHM 5% EMPTY 402

V_1P8STBY

KIC_BASE

U4D2 KIC 1 of 11 IC

	G22	V_VDD18_DET		
PEX_REF_CLK1_REQN	C18	PEX_REF_CLK1_REQN		
PEX_REF_CLK2_REQN	C19	PEX_REF_CLK2_REQN		
	AD22	VPGM		
DB5T2 BKUP_SB_SYNC_CLKP	E18	100M_SYNC_CLK_BYPASS_DP		
DB5T3 BKUP_SB_SYNC_CLKN	E19	100M_SYNC_CLK_BYPASS_DN		
SMC_XTAL_OUT	A18	XTAL_CLK_OUT		
SMC_XTAL_IN	A19	XTAL_CLK_IN		
	AD24	TEST		
SMC_BYPASS_CLK_IN	D21	SMC_BYPASS_CLK_IN		
BKUP_SB_PEX_REF_CLKP	E20	PCIE_BYPASS_CLK_DP		
BKUP_SB_PEX_REF_CLKN	D20	PCIE_BYPASS_CLK_DN		
DB5T4 250M_CLK_BYPASS_DP	F20	250M_CLK_BYPASS_DP		
DB5T6 250M_CLK_BYPASS_DN	F21	250M_CLK_BYPASS_DN		
DB5T10 BKUP_SB_AV_CLKP	D16	AV_CLK_BYPASS_DP		
DB5T9 BKUP_SB_AV_CLKN	D17	AV_CLK_BYPASS_DN		

X861949-001

V_EXT_DET	G21	V_EXT_DET		
V_EXT_OK	F22	V12P0_PWRGD	OUT 53	
SMC_RST_N_OUT	AF22	SMC_RST_N_OUT_R		
I27			DB5E5	
CLK_MONITOR	E17	SB_CLK_MONITOR		
RTC_CLK_OUT	A21	RTC_CLK_OUT		
EMMC_CLK	AC16	MMC_CLK	OUT 33	
ENET_REF_CLK	C20	ENET_REF_CLK		
SOC_NS_SYNC_CLK_DP	B16	SOC_SYNC_NS_100M_CLKP	OUT 2	
SOC_NS_SYNC_CLK_DN	B17	SOC_SYNC_NS_100M_CLKN	OUT 2	
SOC_NS_AV_CLK_DP	A13	SOC_AV_NS_100M_CLKP	OUT 2	
SOC_NS_AV_CLK_DN	A14	SOC_AV_NS_100M_CLKN	OUT 2	
PEX_REF_CLK2_DP	B20	SOC_NB_PEX_SS_100M_CLKP	OUT 2	
PEX_REF_CLK2_DN	B21	SOC_NB_PEX_SS_100M_CLKN	OUT 2	
PEX_REF_CLK1_DP	C14	ENET_PEX_SS_100M_CLKP	OUT 32	
PEX_REF_CLK1_DN	C15	ENET_PEX_SS_100M_CLKN	OUT 32	
PEX_REF_CLK0_DP	A15	SOC_PEX_SS_100M_CLKP	OUT 2	
PEX_REF_CLK0_DN	A16	SOC_PEX_SS_100M_CLKN	OUT 2	

BGA515

V_12P0_GATED

C5T27 1 UF 10% 16 V X5R 603

R5T26 11.3 KOHM 1% CH 402

R5T18 1.13 KOHM 1% CH 402

R5T26/V_EXT_DET IS NOW CONNECTED TO V_12P0_GATED

DB5E6

KEEP DB55E5 AND DB5E6 CLOSE TO EACH OTHER IN LAYOUT

R4E30 1 KOHM 1% 402 CH

SMC_RST_N OUT 26 65

C4E3 270 PF 10% 50 V X7R 402

RTC_RETAIL

R5E4 0 OHM 5% 402 CH

X32K_X2_R OUT 8

R5E6 69.8 KOHM 1% EMPTY 402

R5T16 100 OHM 1% 402 CH PEX_XTAL2 OUT 32

SMC_XTAL_OUT

R5E2 249 KOHM 1% 402 CH

R5E1 1 KOHM 1% 402 CH SMC_XTAL_OUT_R

SMC_XTAL_IN

R5E5 49.9 OHM 1% EMPTY 402

Y5D1 25 MHZ SM XTAL

C5E3 30 PF 5% 50 V NPO 402

C5E4 30 PF 5% 50 V NPO 402

R5T17 10 KOHM 1% 402 CH SMC_BYPASS_CLK_IN

DEBUG

CONN J5F3 MINI RF GND1 GND2 IO1 X864758-001 SM

DEBUG

CONN J5E2 MINI RF GND1 GND2 IO1 X864758-001 SM

ULTRA MINIATURE COAX
TO SMA CABLE ASSEMBLY
DIGIKEY PN: 931-1098-ND

MS_PART#	MATL	REF_DES	DESCR.	BOM PROPERTY
X861949-005	IC	U4D2	IC,KRAKEN SB,BGA515	KIC_RETAIL
X861949-003	IC	U4D2	IC,KRAKEN SB,BGA515	KIC_DEV

MICROSOFT CONFIDENTIAL	PROJECT NAME	PAGE	CSA PAGE	FAB	VER
	Kingston	29/72	29/72	G	1.01

KIC: POWER

FET PREVENTS LEAKAGE THROUGH KRAKEN
FROM STANDBY RAILS TO 3P3 RAIL

U4D2 KIC IC
10 of 11

11 of 11

X861949-001 BGA515

MICROSOFT CONFIDENTIAL	PROJECT NAME	PAGE	CSA PAGE	FAB	VER
	Kingston	30/72	30/72	G	1.01

KIC: DECOUPLING

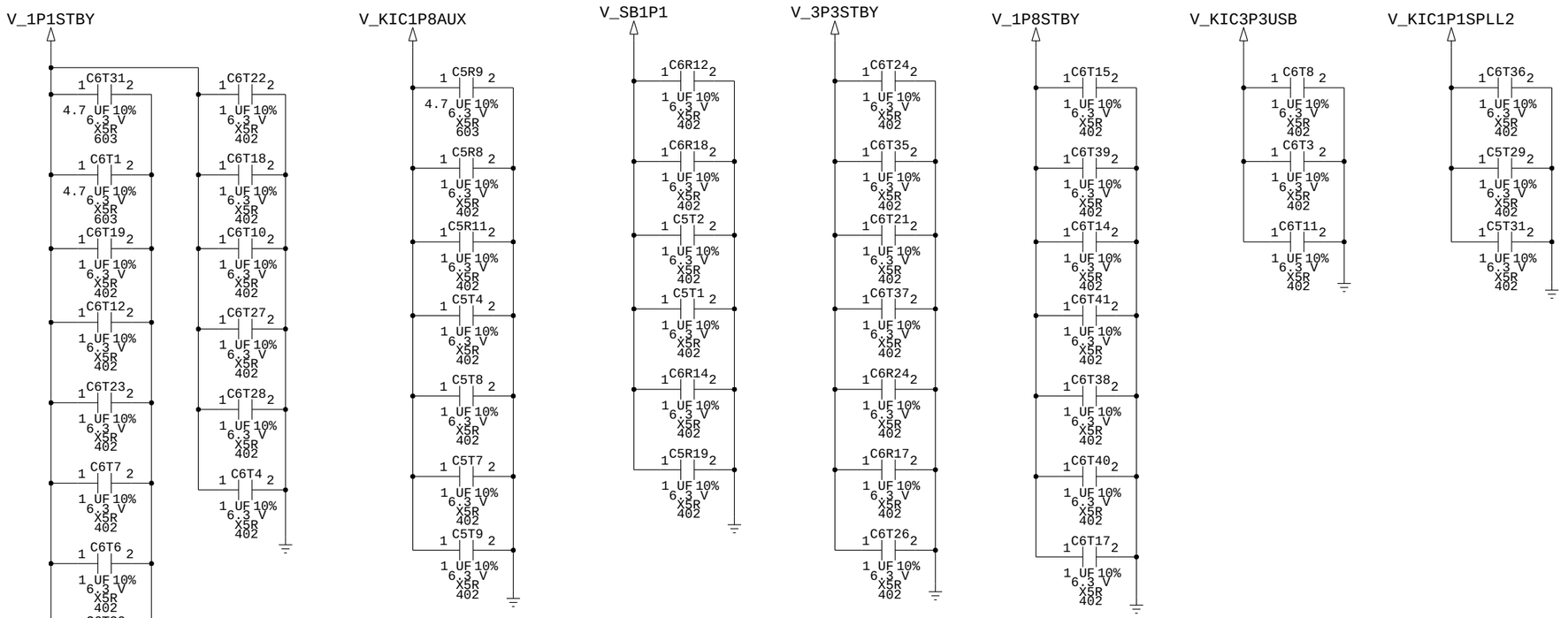

MICROSOFT CONFIDENTIAL	PROJECT NAME	PAGE	CSA PAGE	FAB	VER
	Kingston	31/72	31/72	G	1.01

ETHERNET CONTROLLER

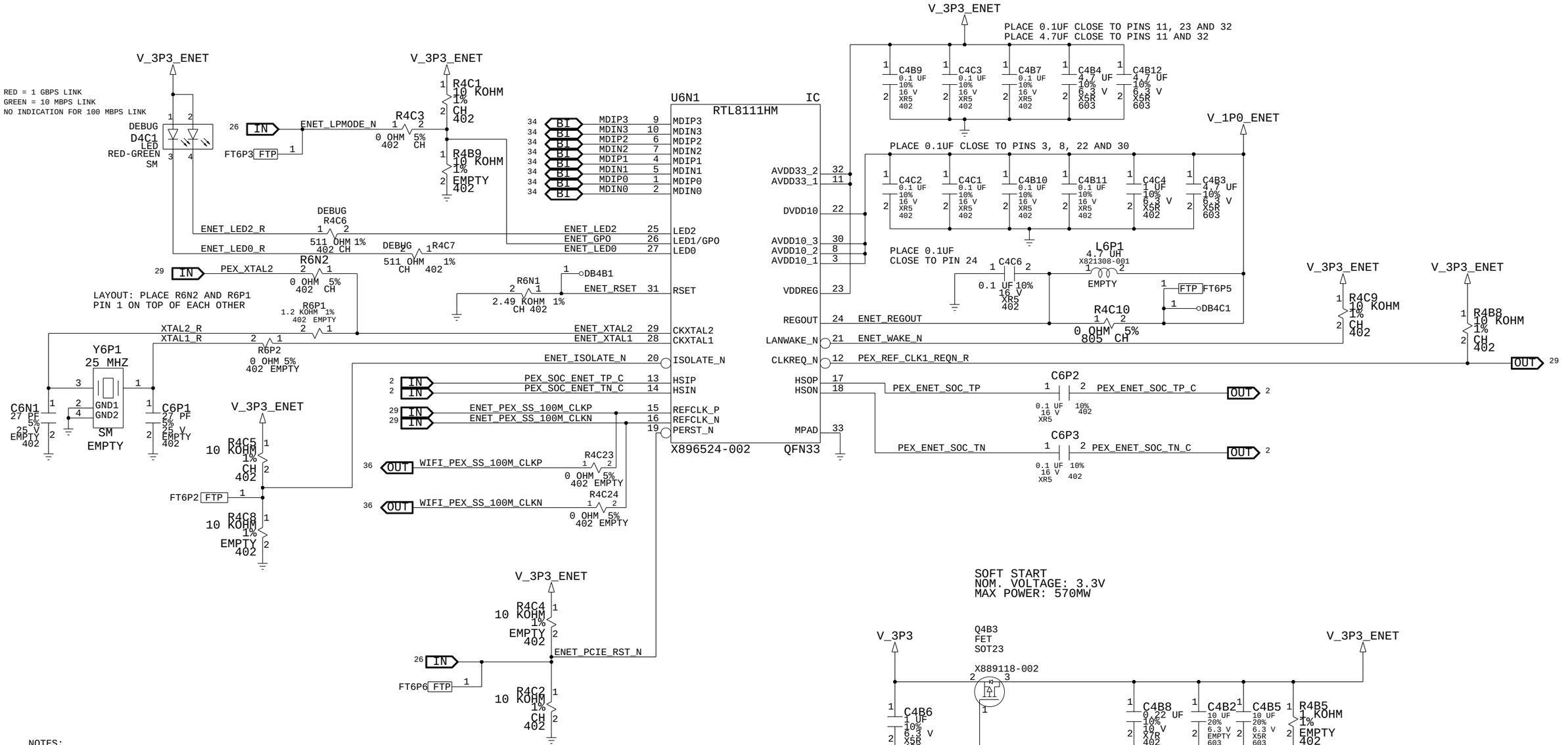

NOTES:

1. THE RTL8111HM IS CONFIGURED FROM REALTEK WITH EFUSE "ENABLE LAN DISABLE" MODE SET, WHICH PROVIDES DEFAULT SUPPORT FOR SIGNAL ENET_LPMODE_N. THIS FEATURE CAN BE OVERRIDDEN BY SOFTWARE
2. TO SUPPORT A PCIE WIFI INTERFACE (J3C1), THE FOLLOWING BOM CHANGES ARE NEEDED:
   - A: POPULATE R4C23 AND R4C24, WHICH WILL SEND THE 100 MHZ CLOCK TO THE WIFI INTERFACE. IN ADDITION, IT IS CRITICAL THAT EACH LEG OF THE CLOCK BE TERMINATED AT THE FAR END INTO 50 OHMS.
   - B: ON PAGE 2, POPULATE AC COUPLING CAPS C6P6 AND C6P7
   - C: FOR PRELIMINARY DEVELOPMENT TESTING, NO OTHER BOM CHANGES ARE REQUIRED. THE ETHERNET CONTROLLER WILL MANAGE THE ENABLING OF THE 100 MHZ CLOCK.
   - D: FOR PRODUCTION RETAIL, ON PAGE 29 REMOVE R4B3 AND POPULATE R4C26. THIS CHANGE WILL REQUIRE MODIFIED SMC FIRMWARE TO EXPLICITLY ENABLE THE 100 MHZ CLOCK.

MICROSOFT CONFIDENTIAL	PROJECT NAME	PAGE	CSA PAGE	FAB	VER
	Kingston	32/72	32/72	G	1.01

EMMC

MS_PART#	MATL	REF_DES	DESCR.	BOM PROPERTY
X934261-001	IC	U3D1	MEM,SM,8GB,EMMC,15NM,THGBMFG6C1LBAILL	EMMC_TOSHIBA
X904693-001	IC	U3D1	MEM,SM,8GB,EMMC,FLASH,16NM,BGA153,KLM8G1GEND-B031,SAMSUNG	EMMC_SAMSUNG
X939723-001	IC	U3D1	MEM,SM,8GB,64GBX1,H26M41204HPR	EMMC_HYNIX_5P0
X800617-001	CH	R4E9,R4E13,R4E11,R4E17,R4E15,R4E21,R4E19,R4E23	RES-FXD,SM,49.9 OHM 1%,1/16W,0402	EMMC_TOSHIBA,EMMC_SAMSUNG
X809936-001	CH	R4E9,R4E13,R4E11,R4E17,R4E15,R4E21,R4E19,R4E23	RES-FXD,SM,100 OHM 1%,1/16W,0402	EMMC_HYNIX_5P0

V_1P8STBY

R4E4 R4E8 R4E12 R4E10 R4E16 R4E14 R4E20 R4E18 R4E22 — 402 CH — 10 KOHM 1%

EMMC_BASE R4E9 — 0 OHM 5% 402 CH — MMC_DATA<7>
EMMC_BASE R4E13 — 0 OHM 5% 402 CH — MMC_DATA<6>
EMMC_BASE R4E11 — 0 OHM 5% 402 CH — MMC_DATA<5>
EMMC_BASE R4E17 — 0 OHM 5% 402 CH — MMC_DATA<4>
EMMC_BASE R4E15 — 0 OHM 5% 402 CH — MMC_DATA<3>
EMMC_BASE R4E21 — 0 OHM 5% 402 CH — MMC_DATA<2>
EMMC_BASE R4E19 — 0 OHM 5% 402 CH — MMC_DATA<1>
EMMC_BASE R4E23 — 0 OHM 5% 402 CH — MMC_DATA<0>

R4E7 — 0 OHM 5% 402 CH — MMC_CMD
R4E5 — 0 OHM 5% 402 CH — MMC_CLK
R4E1 — 1 KOHM 1% 402 CH — MMC_RST_N

R4E2 — 10 KOHM 1% — EMPTY 402

FT6T4 FTP 1
FT6T2 FTP 1

V_1P8STBY
R4E6 — 10 KOHM 1% CH 402

R7T2 — 10 KOHM 5% 402 EMPTY — MMC_DS_5P0

U4D2 KIC IC — 5 of 12 — I446

MMC_DATA7	AE18	7
MMC_DATA6	AD15	6
MMC_DATA5	AE15	5
MMC_DATA4	AD16	4
MMC_DATA3	AF16	3
MMC_DATA2	AF18	2
MMC_DATA1	AD17	1
MMC_DATA0	AE17	0
MMC_CMD	AF14	MMC_CMD
MMC_RESET_N	AE14	MMC_RST_N

MMC_DATA<7..0> BI 33
MMC_CMD OUT 33
MMC_RST_N OUT 33

X861949-001 BGA515

U3D1 EMMC_BASE IC — EMMC_153PIN 1 of 3 — X894231-002 BGA153

MMC_DATA_R<7>	B6	DATA7
MMC_DATA_R<6>	B5	DATA6
MMC_DATA_R<5>	B4	DATA5
MMC_DATA_R<4>	B3	DATA4
MMC_DATA_R<3>	B2	DATA3
MMC_DATA_R<2>	A5	DATA2
MMC_DATA_R<1>	A4	DATA1
MMC_DATA_R<0>	A3	DATA0
MMC_DS_5P0	H5	DATA_STROBE
MMC_CMD_R	M5	CMD
MMC_CLK_R	M6	CLK
MMC_RST_N_R	K5	RSTN

VDD4	P5	
VDD3	P3	
VDD2	N4	
VDD1	M4	
VDD0	C6	
VDDF3	K9	
VDDF2	F5	
VDDF1	E6	
VDDF0	J10	
VDDI	C2	VDDI_ROUTE
VSS10	J5	MMC_VSS10_5P0
VSS9	A6	
VSS8	P4	
VSS7	N2	
VSS6	C4	MMC_VSS9_5P0
VSS5	N5	
VSS4	G5	
VSS3	P6	
VSS2	E7	
VSS1	K8	
VSS0	H10	

V_1P8STBY
C7T1 0.1 UF 10% 16 V XR5 402
C4E1 0.1 UF 10% 16 V XR5 402
C6T13 2.2 UF 20% 6.3 V X5R 402
C7T5 1 UF 10% 6.3 V X5R 402
C6T16 0.1 UF 10% 16 V XR5 402
C6T25 0.1 UF 10% 16 V XR5 402
C6T20 2.2 UF 20% 6.3 V X5R 402

V_3P3STBY
C7T2 0.1 UF 10% 16 V XR5 402
C7T3 0.1 UF 10% 16 V XR5 402
C7T4 2.2 UF 20% 6.3 V X5R 402

R7T1 — 0 OHM 5% 402 EMPTY — MMC_VSS10_5P0
R6T2 — 0 OHM 5% 402 EMPTY — MMC_VSS9_5P0
C4E2 1 UF 10% 6.3 V X5R 402

MMC_X NETS ARE DUMMY NETS TO IMPROVE PAD ADHESION

U3D1 IC — EMMC_153PIN 2 of 3 — X894231-002 BGA153

MMC_X7	A1	NC0	NC35	E1
D4	A2	NC1	NC36	E2
	A8	NC2	NC37	E3
	A9	NC3	NC38	E12
	A10	NC4	NC39	E13
	A11	NC5	NC40	E14
	A12	NC6	NC41	F1
MMC_X6	A13	NC7	NC42	F2
MMC_X4	A14	NC8	NC43	F3
MMC_X8	B1	NC9	NC44	F12
	B7	NC10	NC45	F13
	B8	NC11	NC46	F14
	B9	NC12	NC47	G1
	B10	NC13	NC48	G2
	B11	NC14	NC49	G12
	B12	NC15	NC50	G13
	B13	NC16	NC51	G14
MMC_X5	B14	NC17	NC52	H1
D3	C1	NC18	NC53	H2
D5	C3	NC19	NC54	H3
D7	C7	NC20	NC55	H12
	C8	NC21	NC56	H13
	C9	NC22	NC57	H14
	C10	NC23	NC58	J1
	C11	NC24	NC59	J2
	C12	NC25	NC60	J3
	C13	NC26	NC61	J12
	C14	NC27	NC62	J13
	D1	NC28	NC63	J14
	D2	NC29	NC64	K1
	D3	NC30	NC65	K2
	D4	NC31	NC66	K3
	D12	NC32	NC67	K12
	D13	NC33	NC68	K13
	D14	NC34	NC69	K14

DB3E7 DB3E6 DB3E5 DB3E4 DB3E3 DB3E2

VDDI_ROUTE

U3D1 IC — EMMC_153PIN 3 of 3 — X894231-002 BGA153

	A7	RFU1	NC80	M8	
D6	C5	RFU2	NC81	M9	
	E5	RFU3	NC82	M10	
	E8	RFU4	NC83	M11	
	E9	RFU5	NC84	M12	
	E10	RFU6	NC85	M13	
	F10	RFU7	NC86	M14	
	G3	RFU8	NC87	N1	MMC_X11
	G10	RFU9	NC88	N3	
			NC89	N6	
	K6	RFU12	NC90	N7	
	K7	RFU13	NC91	N8	
	K10	RFU14	NC92	N9	
	P7	RFU15	NC93	N10	
	P10	RFU16	NC94	N11	
	L1	NC70	NC95	N12	
	L2	NC71	NC96	N13	
	L3	NC72	NC97	N14	MMC_X3
	L12	NC73	NC98	P1	MMC_X10
	L13	NC74	NC99	P2	MMC_X12
	L14	NC75	NC100	P8	
	M1	NC76	NC101	P9	
	M2	NC77	NC102	P11	
	M3	NC78	NC103	P12	
	M7	NC79	NC104	P13	MMC_X2
			NC105	P14	MMC_X1

DUMMY_EMMC_P10
DB3E1

SIGNALS ROUTED TO NC PINS FOR ESCAPE

D7	PIN B6 ROUTED TO PIN C7, C8
D6	PIN B5 ROUTED TO PIN C5
D5	PIN B4 ROUTED TO PIN C3, D3
D4	PIN B3 ROUTED TO PIN A2
D3	PIN B2 ROUTED TO PIN C1
VDDI	PIN C2 ROUTED TO PIN D1
GND	PIN N2 ROUTED TO PIN M1

MICROSOFT CONFIDENTIAL	PROJECT NAME	PAGE	CSA PAGE	FAB	VER
	Kingston	33/72	33/72	G	1.01

CONN: RJ45,TOSLINK

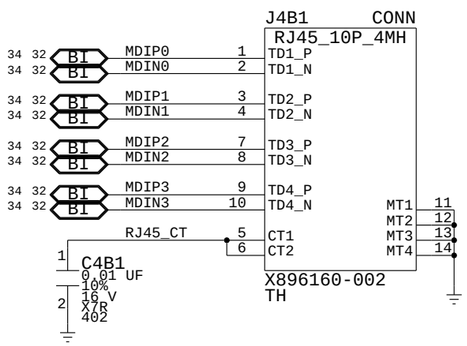

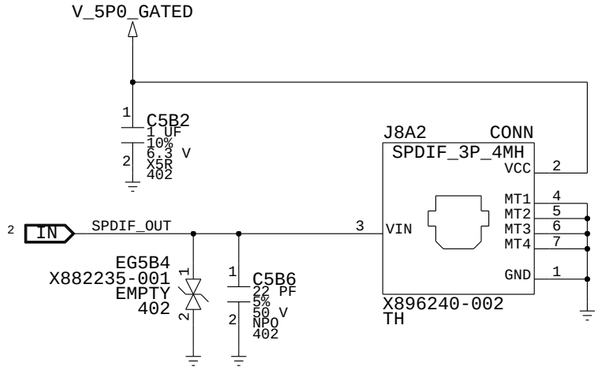

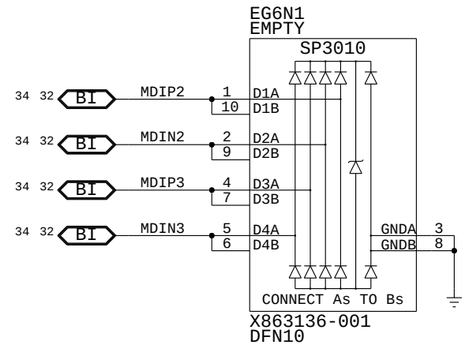

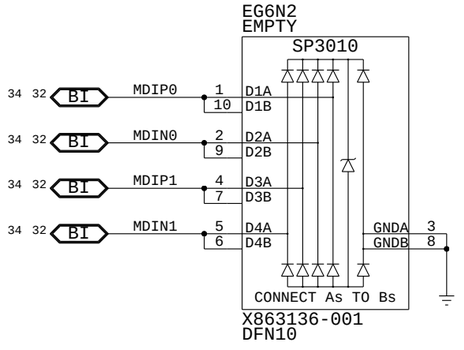

MICROSOFT CONFIDENTIAL	PROJECT NAME	PAGE	CSA PAGE	FAB	VER
	Kingston	34/72	34/72	G	1.01

CONN: USB (FRONT & REAR)

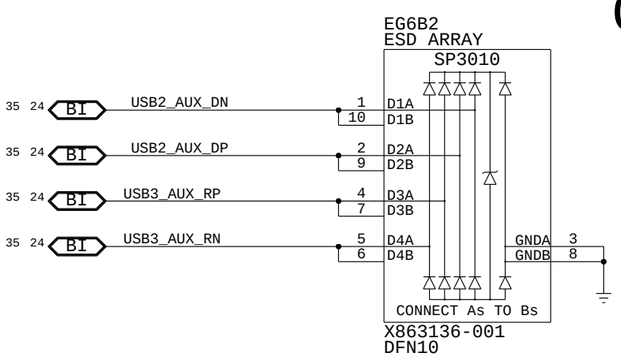

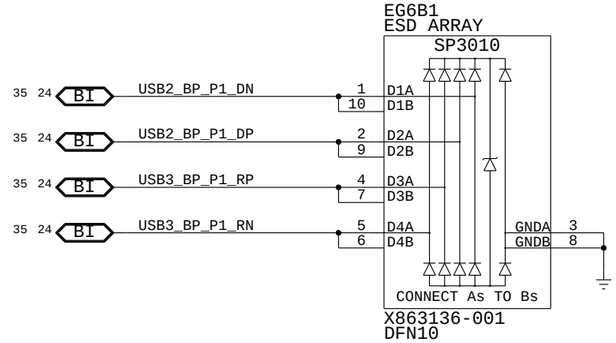

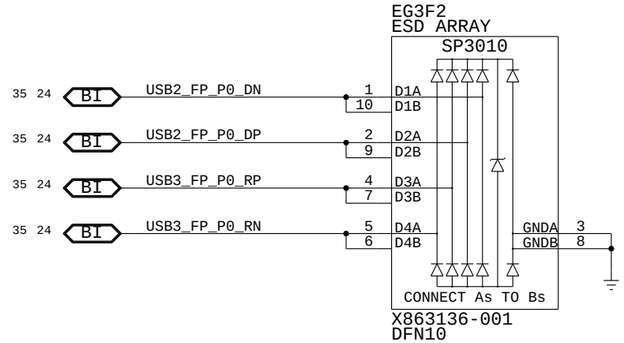

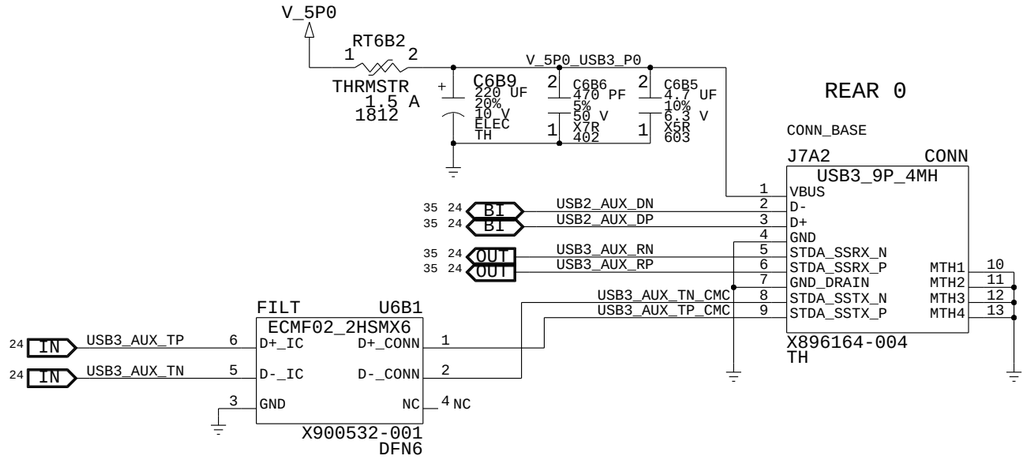

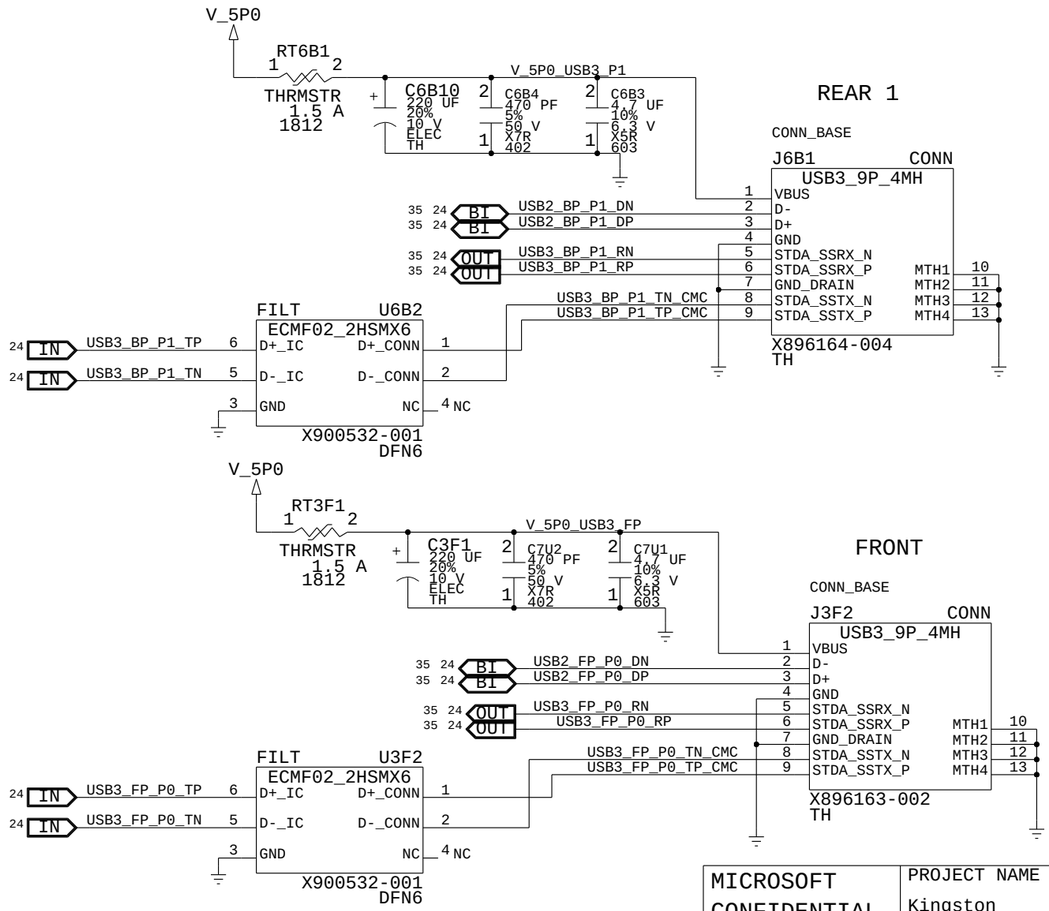

MS_PART#	MATL	REF_DES	DESCR.	BOM PROPERTY
X896164-004	CONN	J7A2,J6B1	CONN-USB,TH,009,FEMALE,USB3-A,BLACK NI, KGS	USB_REAR_FOXC_BLACK
X896164-003	CONN	J7A2,J6B1	CONN-USB,SM,009,FEMALE,USB3-A,PLAIN NI, KGS	USB_REAR_FOXC_PLAIN

MS_PART#	MATL	REF_DES	DESCR.	BOM PROPERTY
X896163-004	CONN	J3F2	CONN-USB,TH,009,FEMALE,FRONT,USB3-A,BLACK NICKEL,KGS	USB_FRONT_FOXC
X907318-002	CONN	J3F2	CONN-USB,TH,009,FEMALE,FRONT,USB3-A,KGS,(QUAL-AMPHENOL)	USB_FRONT_AMPH

MICROSOFT CONFIDENTIAL	PROJECT NAME	PAGE	CSA PAGE	FAB	VER
	Kingston	35/72	35/72	G	1.01

CONN: WIFI

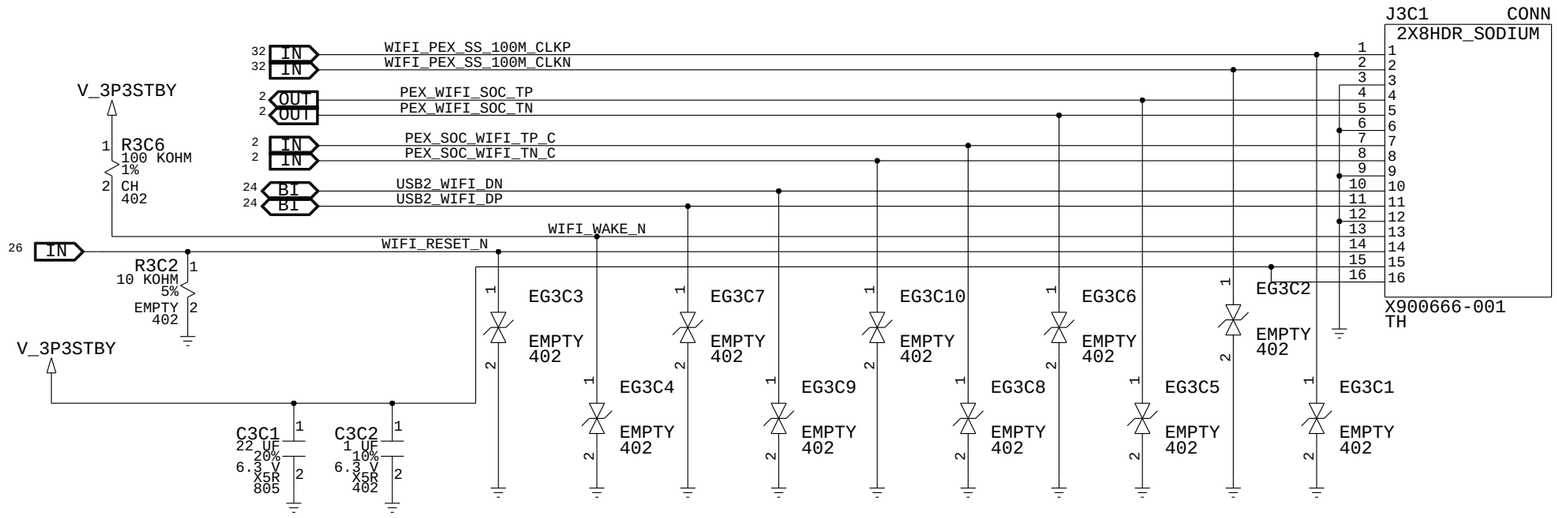

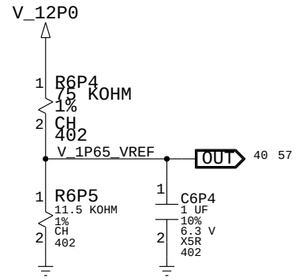

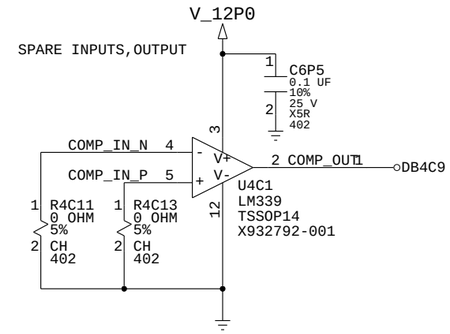

MICROSOFT CONFIDENTIAL	PROJECT NAME	PAGE	CSA PAGE	FAB	VER
	Kingston	36/72	36/72	G	1.01

CONN: HDMI IN

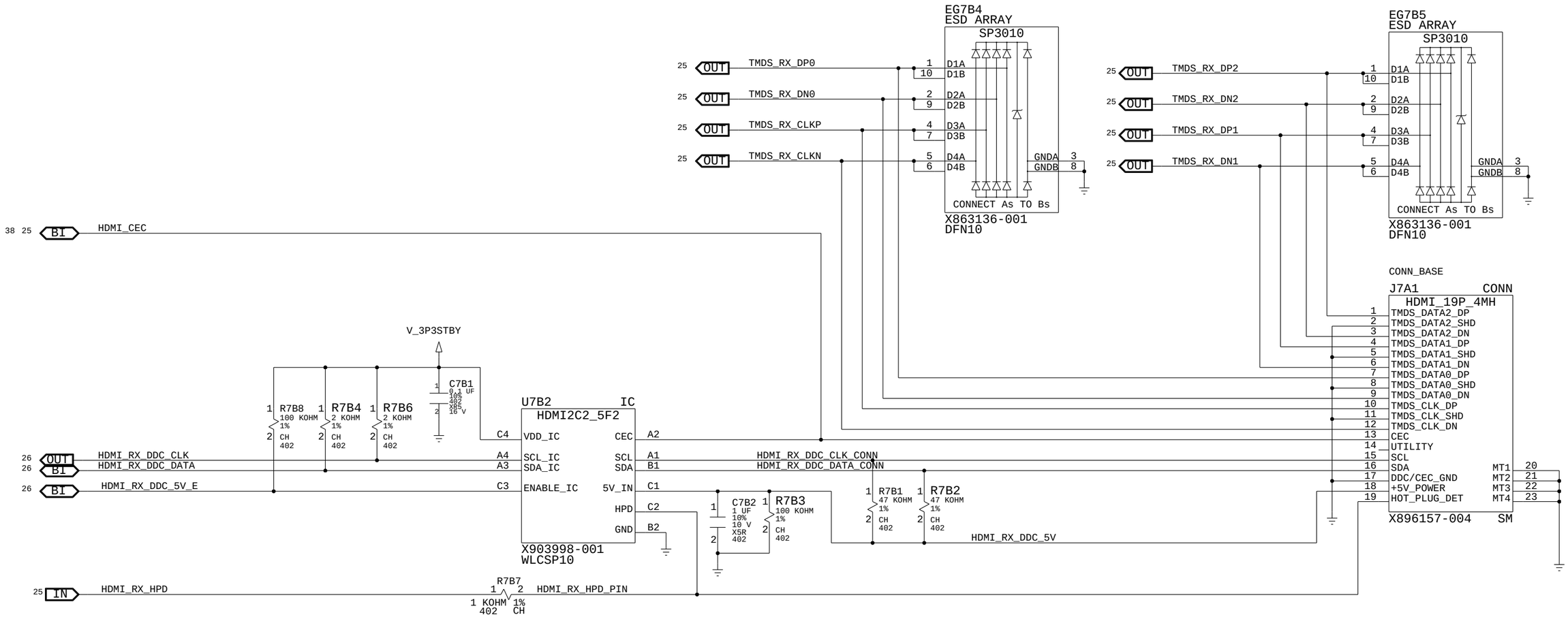

MS_PART#	MATL	REF_DES	DESCR.	BOM PROPERTY
X896157-006	CONN	J7A1,J8A1	CONN-HDMI,SM.019,FEMALE,W/EMI FLANGES,BLACK NI,KGS	HDMI_FOXC_BLACK
X896157-005	CONN	J7A1,J8A1	CONN-HDMI,SM,019,FEMALE,W/ EMI FLANGES,PLAIN NI, KGS	HDMI_FOXC_PLAIN

MICROSOFT CONFIDENTIAL	PROJECT NAME	PAGE	CSA PAGE	FAB	VER
	Kingston	37/72	37/72	G	1.01

CONN: HDMI OUT

DP159 CONTROL SLAVE ADDRESS			
SELECTED	A1/A0	7-BIT ADDRESS	8-BIT ADDRESS
-->	00	0X5E	BC/BD
	01	0X5D	BA/BB
	10	0X5C	B8/B9
	11	0X5B	B6/B7

U8B2 IC
SN75DP159
1 OF 3
CONTROL
X944186-001
QFN41

U8B2 IC
SN75DP159
2 OF 3
HDMI
X944186-001
QFN41

U8B2 IC
SN75DP159
3 OF 3
POWER
X944186-001
QFN41

EG8B6
ESD ARRAY
SP3010
CONNECT As TO Bs
X863136-001
DFN10

EG8B7
ESD ARRAY
SP3010
CONNECT As TO Bs
X863136-001
DFN10

U8B1 IC
HDMI2C4_5F2
X934148-001
WLCSP12

HDMI LOAD SWITCH
NOM.VOLTAGE: 5V
PEAK CURRENT: 0.2A

CONN_BASE
J8A1 CONN
HDMI_19P_4MH
X896157-004 SM

DATA P LINE DELAY ADDED TO BOARD TO COMPENSATE FOR DP159 INTRAPAIR SKEW

MICROSOFT CONFIDENTIAL	PROJECT NAME	PAGE	CSA PAGE	FAB	VER
	Kingston	38/72	38/72	G	1.01

CONN: HDMI SUPPORT

BLANK

MICROSOFT CONFIDENTIAL	PROJECT NAME	PAGE	CSA PAGE	FAB	VER
	Kingston	39/72	39/72	G	1.01

CONN: ODD & HDD

HDD SATA

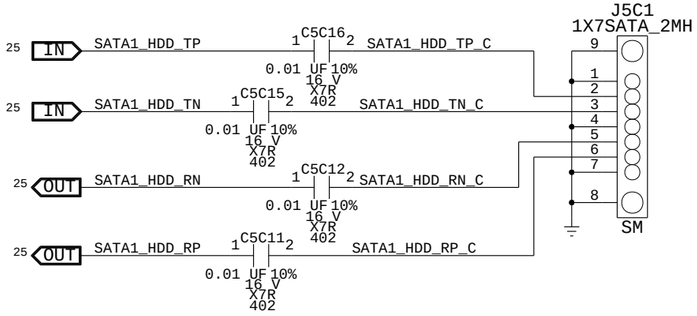

ODD SATA

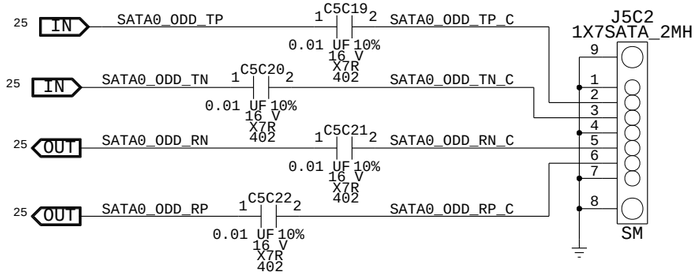

HDD POWER

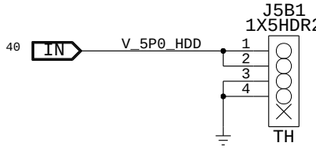

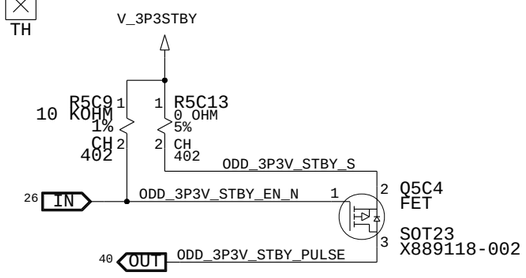

ODD POWER & GPIOs

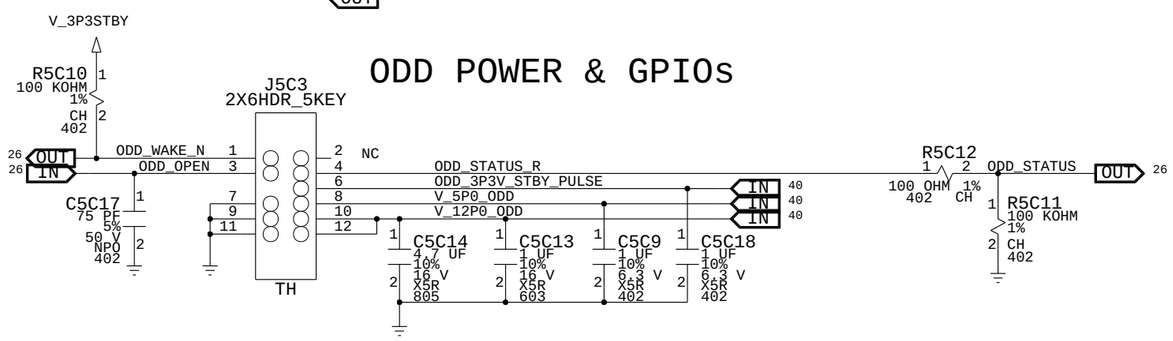

ODD 12V LOAD SWITCH

NOM.VOLTAGE: 12V

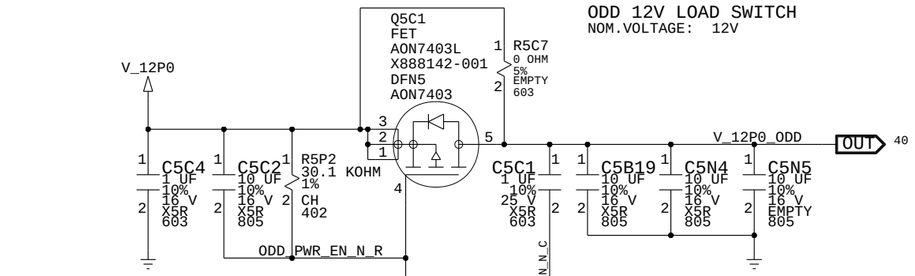

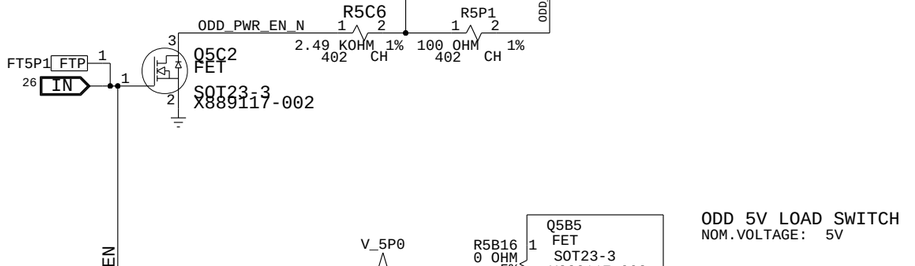

ODD 5V LOAD SWITCH

NOM.VOLTAGE: 5V

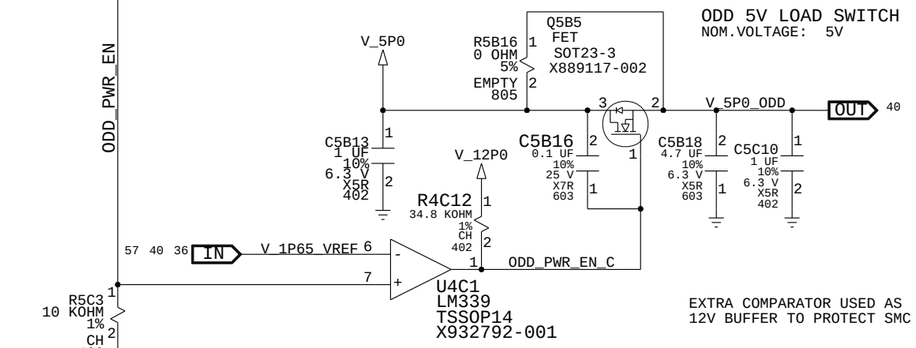

EXTRA COMPARATOR USED AS
12V BUFFER TO PROTECT SMC GPIO

HDD LOAD SWITCH

NOM.VOLTAGE: 5V
PEAK CURRENT: 1A

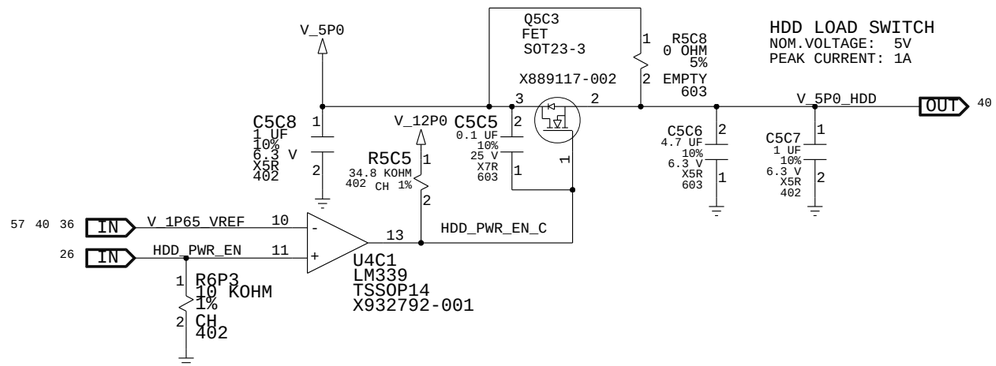

MICROSOFT CONFIDENTIAL	PROJECT NAME	PAGE	CSA PAGE	FAB	VER
	Kingston	40/72	40/72	G	1.01

CONN: FRONT PANEL,FAN, AUDIO

R6F15 10 KOHM 1% 402 CH — PWRSW_N — PWRSW_N_R
R6F16 10 KOHM 1% 402 CH — EJECTSW_N — EJECTSW_N_R
R6G1 2.49 KOHM 1% 402 CH — BINDSW_N_R — BINDSW_N_FPM

V_5P0: C6G2 470 PF 5% 50 V NPO 402; C6F9 100 UF 20% 16 V ELEC TH
V_3P3STBY: C5G2 470 PF 5% 50 V NPO 402; C6F10 100 UF 20% 16 V ELEC TH
V_3P3STBY: R6F14, R6F17, R5F20 100 KOHM 1% CH 402

V_5P0: R5U10 1 KOHM 1% EMPTY 402
LED_NEXUS: R6F13 100 KOHM 1% CH 402; EG6F1 X882235-001 EMPTY 402

R6G2 10 KOHM 1% EMPTY 402

EG5G1 X882235-001 EMPTY 402
EG5G2 X882235-001 EMPTY 402
EG6G3 X882235-001 EMPTY 402
EG6G4 X882235-001 EMPTY 402
EG6G2 X882235-001 EMPTY 402
EG6G6 X882235-001 EMPTY 402
EG6F3 X882235-001 EMPTY 402
EG6F2 X882235-001 EMPTY 402
EG6G1 X882235-001 EMPTY 402
EG6G5 X882235-001 EMPTY 402

J6G1 CONN 2X8HDR_SODIUM X900666-001 TH

1	LED_NEXUS	
2	SPARE	
3	IR_BLAST	
4	PWR_SW_N	
5	EJECT_SW_N	
6	INT_N	NC
7	V_3P3STBY	
8	V_5P0	
9	ACC_RESET	ACC_RESET_N
10	IR_RX	IR_DATA
11	GND_1	
12	USB2_DN	USB2_ACC_DN
13	USB2_DP	USB2_ACC_DP
14	GND_2	
15	SMBUS_CLK	SMBUS_CLK
16	SMBUS_DATA	SMBUS_DATA

V_5P0: R6U2 0 OHM 5% 805 CH
V_SPKR_AMP: R4F19 47 KOHM 1% 402 EMPTY

AUDIO_AMP_VREF: C6U3 10 UF 10% 16 V X5R 805
C6U4 0.1 UF 10% 25 V X7R 603
C6U5 10 UF 10% 16 V X5R 805

AUDIO_PWM_OUT — R6U4 200 OHM 1% 402 CH — AUDIO_PWM_FILT — C6U1 1 UF 10% 10 V X5R 402 — AUDIO_PWM_FILT_C
R4E37 10 KOHM 1% CH 402; C6U2 0.1 UF 10% 25 V X7R 603
R6U3 6.19 KOHM 1% 402 CH — AUDIO_PWM_AMP_IN
R6U7 10 KOHM 1% 402 CH — AUDIO_AMP_CE

U6U1 IC ISD8104 X936772-001 S09
VREF, VIP, VIN, CE, VDD, VOUTP, VOUTN, GND, MPAD
SPKR_AMP_OUT_VP, SPKR_AMP_OUT_VN

C6U6 1000 PF 10% 50 V X7R 402

U4F3 SPKR X913539-001 (POS, NEG)

R4F22 47 KOHM 1% 402 EMPTY

V_12P0_GATED
V_3P3: R9F11 4.7 KOHM 5% CH 402
C9F19 1 UF 10% 16 V X5R 603
C9F11 100 UF 20% 16 V ELEC TH
C9F18 100 UF 20% 16 V EMPTY TH
C9F13 4700 PF 10% 16 V X7R 603

J9F1 1X4HDR TH

FAN_TACH_IN — R9F13 0 OHM 5% 402 CH — FAN_TACH_IN_R
FAN_PWM — R5T32 33 OHM 1% 402 CH — FAN_PWM_R

MICROSOFT CONFIDENTIAL	PROJECT NAME	PAGE	CSA PAGE	FAB	VER
	Kingston	41/72	41/72	G	1.01

CONN: POWER

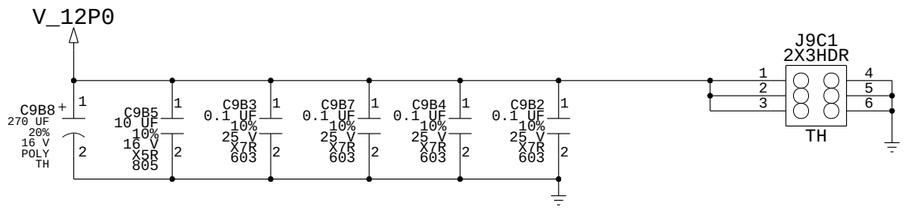

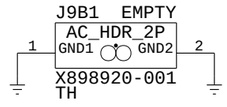

MICROSOFT CONFIDENTIAL	PROJECT NAME	PAGE	CSA PAGE	FAB	VER
	Kingston	42/72	42/72	G	1.01

VREGS: INPUT & OUTPUT FILTERS

IO/NBCORE INPUT FILTER

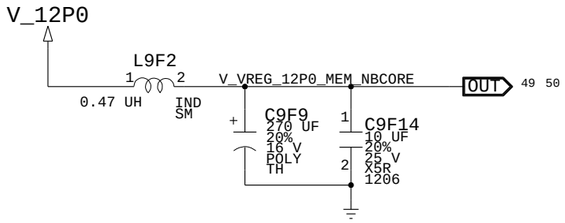

GFX/CPU INPUT FILTER

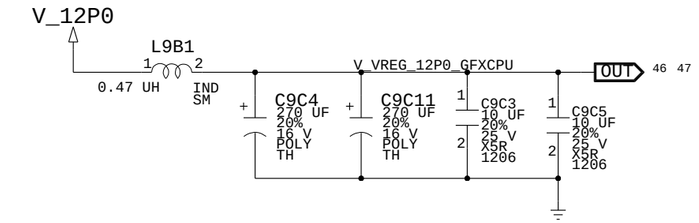

V_GFXCORE OUTPUT FILTER

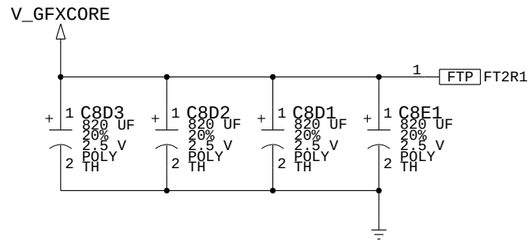

V_CPUCORE OUTPUT FILTER

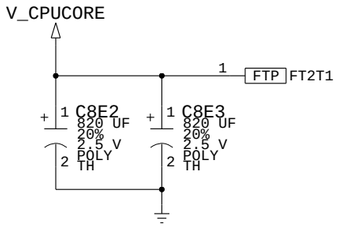

V_5P0 AND V_3P3 INPUT FILTER

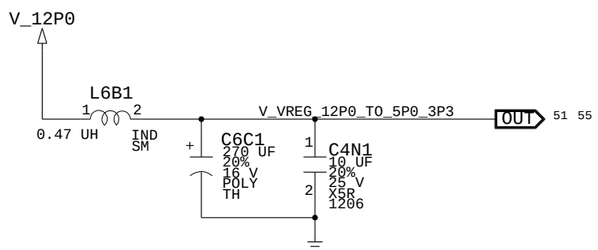

MICROSOFT CONFIDENTIAL	PROJECT NAME	PAGE	CSA PAGE	FAB	VER
	Kingston	43/72	43/72	G	1.01

VREGS: CPUCORE

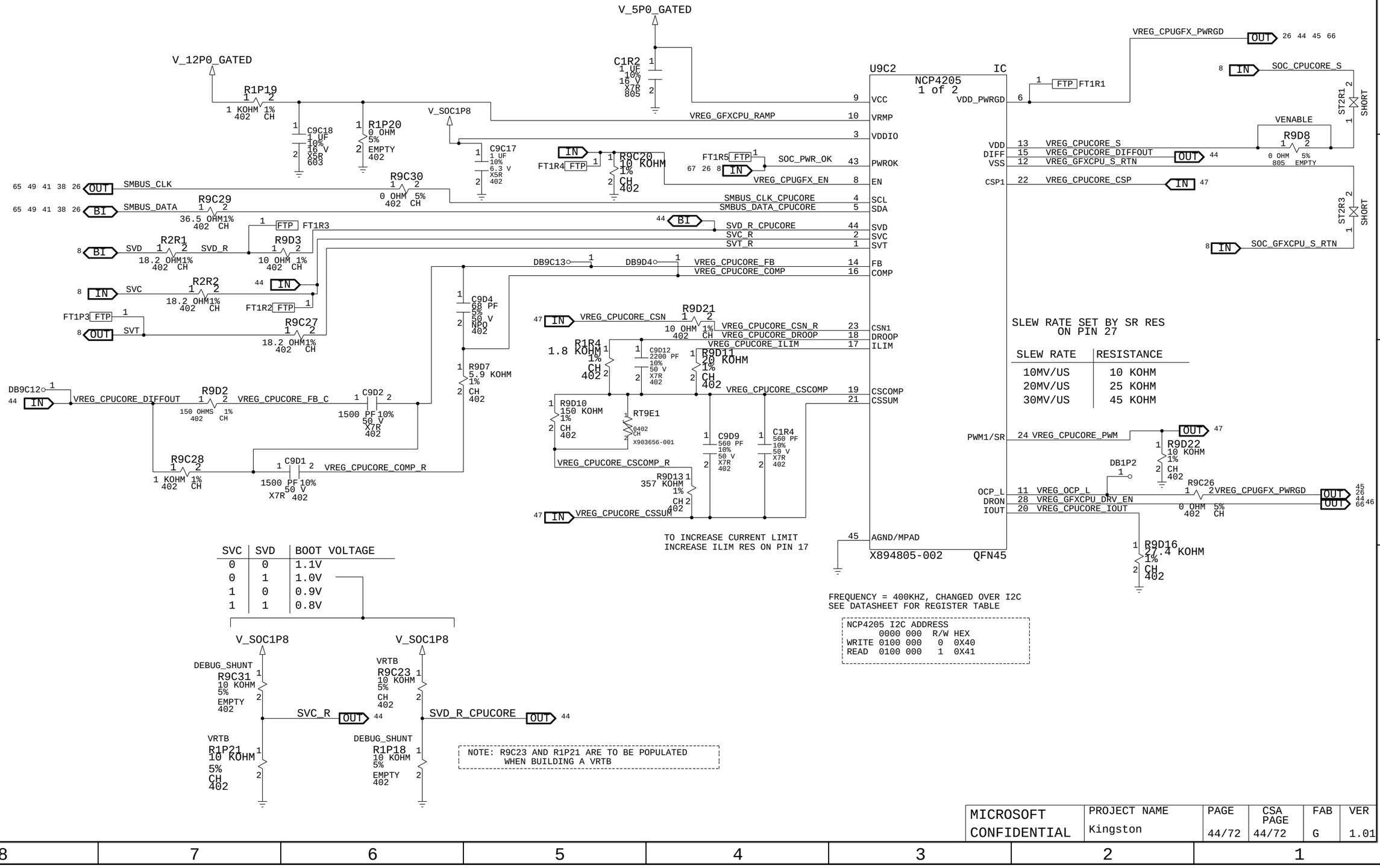

MICROSOFT CONFIDENTIAL	PROJECT NAME	PAGE	CSA PAGE	FAB	VER
	Kingston	44/72	44/72	G	1.01

VREGS: GFXCORE

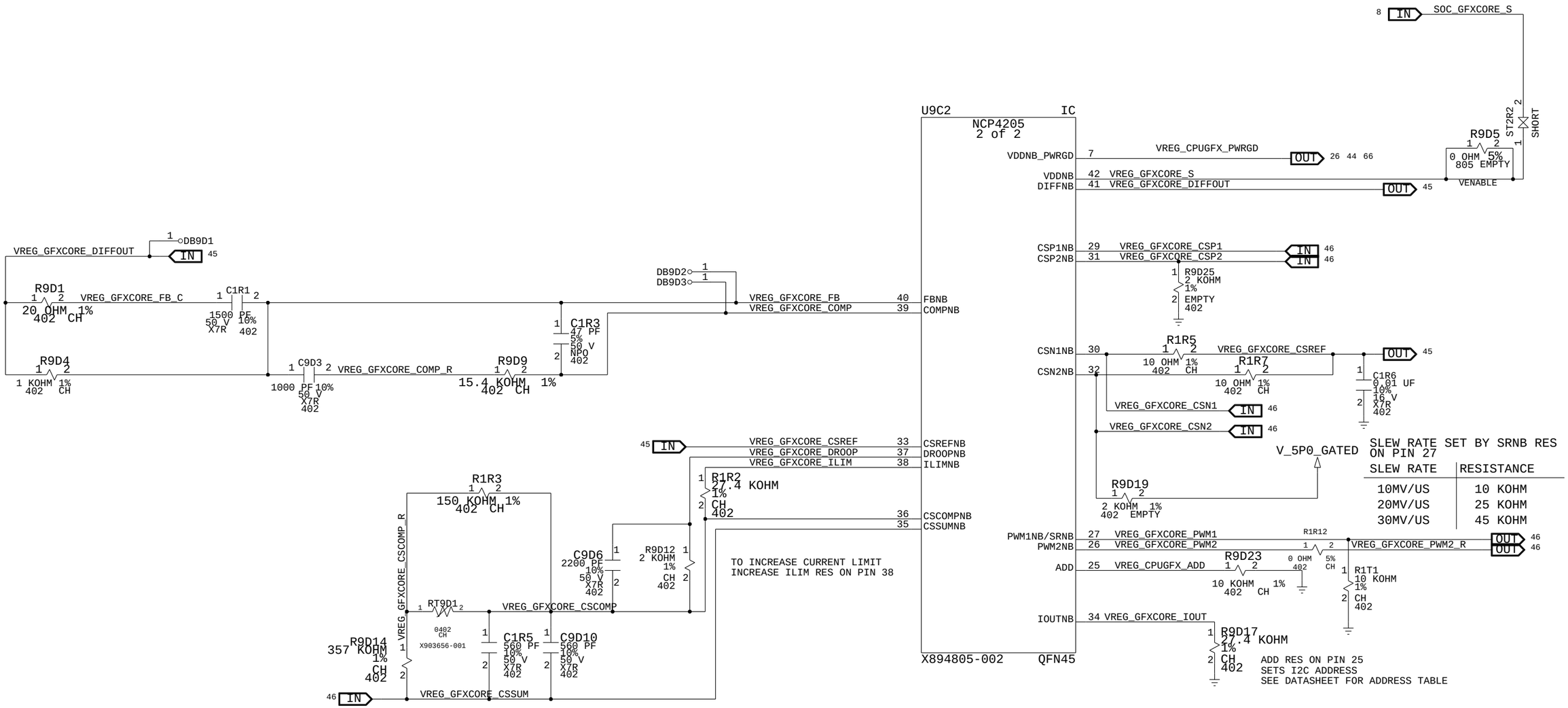

MICROSOFT CONFIDENTIAL	PROJECT NAME	PAGE	CSA PAGE	FAB	VER
	Kingston	45/72	45/72	G	1.01

VREGS: GFXCORE OUTPUT PHASE 1 & 2

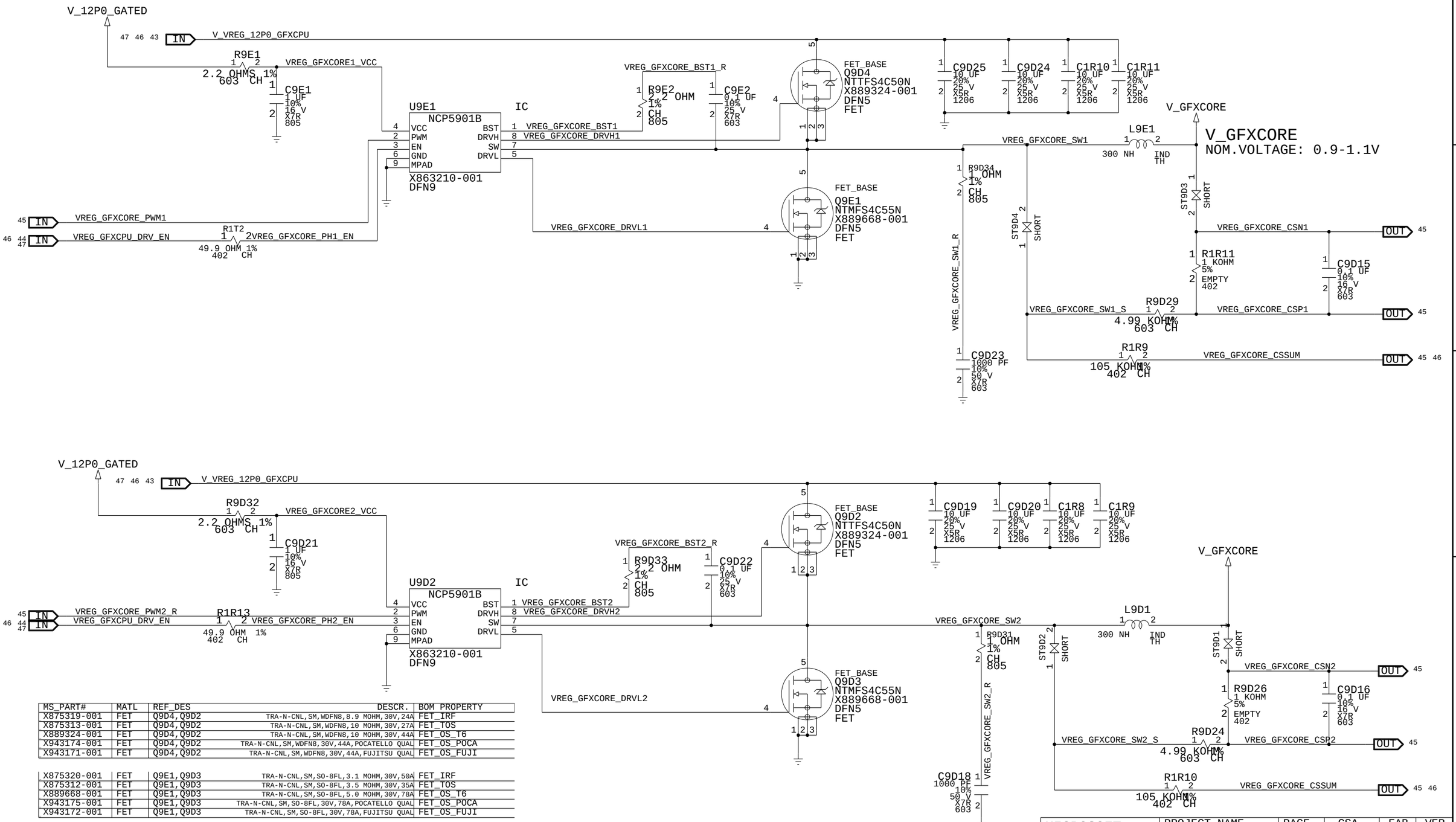

MS_PART#	MATL	REF_DES	DESCR.	BOM PROPERTY
X875319-001	FET	Q9D4,Q9D2	TRA-N-CNL,SM,WDFN8,8.9 MOHM,30V,24A	FET_IRF
X875313-001	FET	Q9D4,Q9D2	TRA-N-CNL,SM,WDFN8,10 MOHM,30V,27A	FET_TOS
X889324-001	FET	Q9D4,Q9D2	TRA-N-CNL,SM,WDFN8,10 MOHM,30V,44A	FET_OS_T6
X943174-001	FET	Q9D4,Q9D2	TRA-N-CNL,SM,WDFN8,30V,44A,POCATELLO QUAL	FET_OS_POCA
X943171-001	FET	Q9D4,Q9D2	TRA-N-CNL,SM,WDFN8,30V,44A,FUJITSU QUAL	FET_OS_FUJI

X875320-001	FET	Q9E1,Q9D3	TRA-N-CNL,SM,SO-8FL,3.1 MOHM,30V,50A	FET_IRF
X875312-001	FET	Q9E1,Q9D3	TRA-N-CNL,SM,SO-8FL,3.5 MOHM,30V,35A	FET_TOS
X889668-001	FET	Q9E1,Q9D3	TRA-N-CNL,SM,SO-8FL,5.0 MOHM,30V,78A	FET_OS_T6
X943175-001	FET	Q9E1,Q9D3	TRA-N-CNL,SM,SO-8FL,30V,78A,POCATELLO QUAL	FET_OS_POCA
X943172-001	FET	Q9E1,Q9D3	TRA-N-CNL,SM,SO-8FL,30V,78A,FUJITSU QUAL	FET_OS_FUJI

MICROSOFT CONFIDENTIAL	PROJECT NAME	PAGE	CSA PAGE	FAB	VER
	Kingston	46/72	46/72	G	1.01

VREGS: CPUCORE OUTPUT PHASE

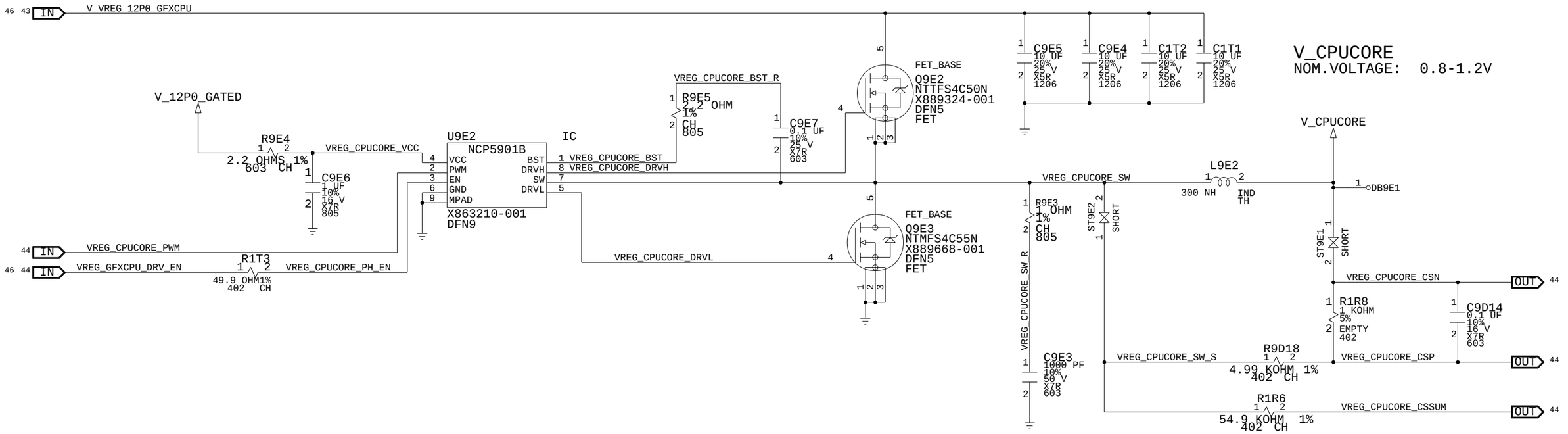

MS_PART#	MATL	REF_DES	DESCR.	BOM PROPERTY
X875319-001	FET	Q9E2	TRA-N-CNL,SM,WDFN8,8.9 MOHM,30V,24A	FET_IRF
X875313-001	FET	Q9E2	TRA-N-CNL,SM,WDFN8,10 MOHM,30V,27A	FET_TOS
X889324-001	FET	Q9E2	TRA-N-CNL,SM,WDFN8,10 MOHM,30V,44A	FET_OS_T6
X943174-001	FET	Q9E2	TRA-N-CNL,SM,WDFN8,30V,44A,POCATELLO QUAL	FET_OS_POCA
X943171-001	FET	Q9E2	TRA-N-CNL,SM,WDFN8,30V,44A,FUJITSU QUAL	FET_OS_FUJI

MS_PART#	MATL	REF_DES	DESCR.	BOM PROPERTY
X875320-001	FET	Q9E3	TRA-N-CNL,SM,SO-8FL,3.1 MOHM,30V,50A	FET_IRF
X875312-001	FET	Q9E3	TRA-N-CNL,SM,SO-8FL,3.5 MOHM,30V,35A	FET_TOS
X889668-001	FET	Q9E3	TRA-N-CNL,SM,SO-8FL,5.0 MOHM,30V,78A	FET_OS_T6
X943175-001	FET	Q9E3	TRA-N-CNL,SM,SO-8FL,30V,78A,POCATELLO QUAL	FET_OS_POCA
X943172-001	FET	Q9E3	TRA-N-CNL,SM,SO-8FL,30V,78A,FUJITSU QUAL	FET_OS_FUJI

MICROSOFT CONFIDENTIAL	PROJECT NAME	PAGE	CSA PAGE	FAB	VER
	Kingston	47/72	47/72	G	1.01

VREGS: VTT TERMINATION

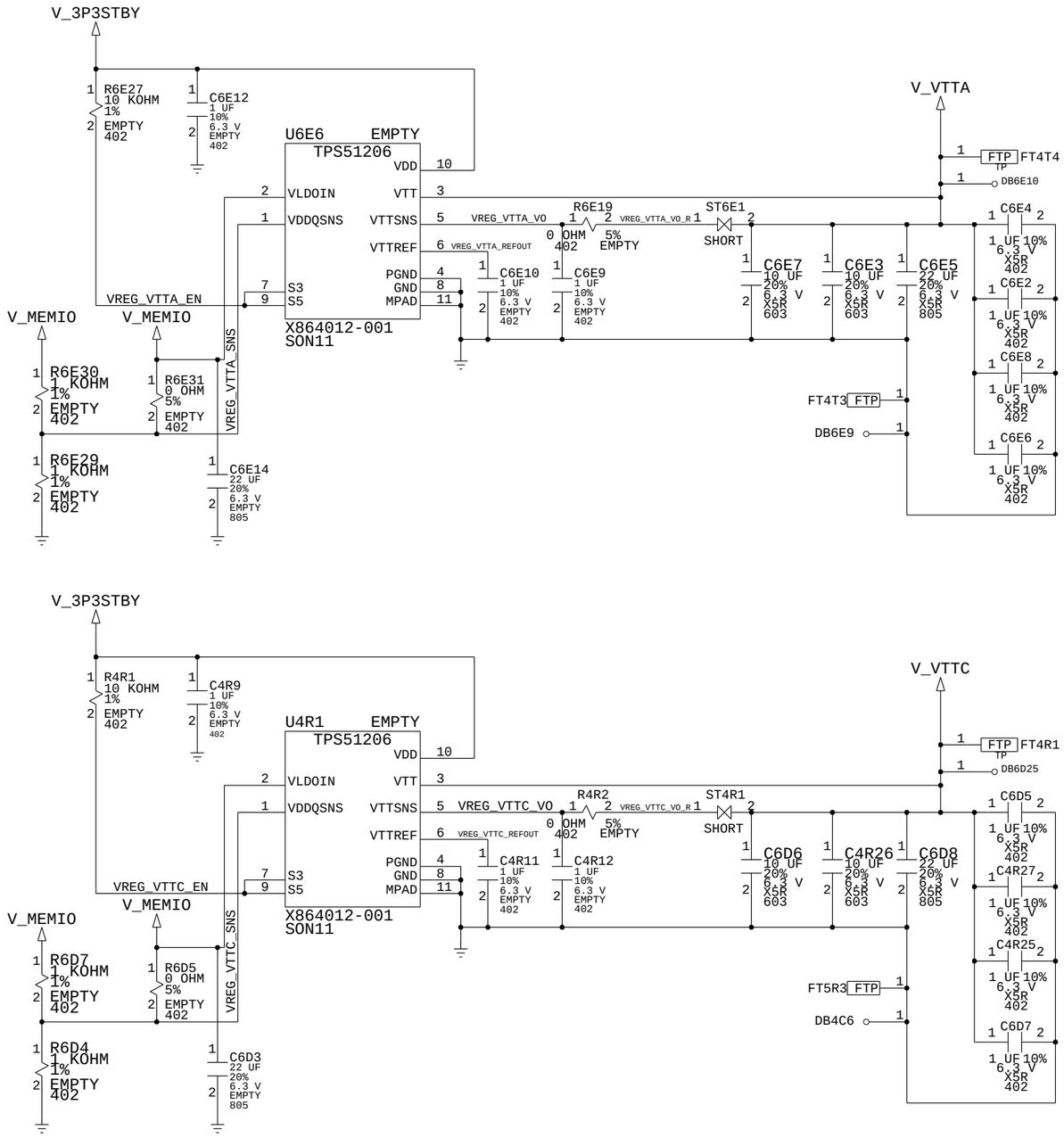

MICROSOFT CONFIDENTIAL	PROJECT NAME	PAGE	CSA PAGE	FAB	VER
	Kingston	48/72	48/72	G	1.01

VREGS: NBCORE

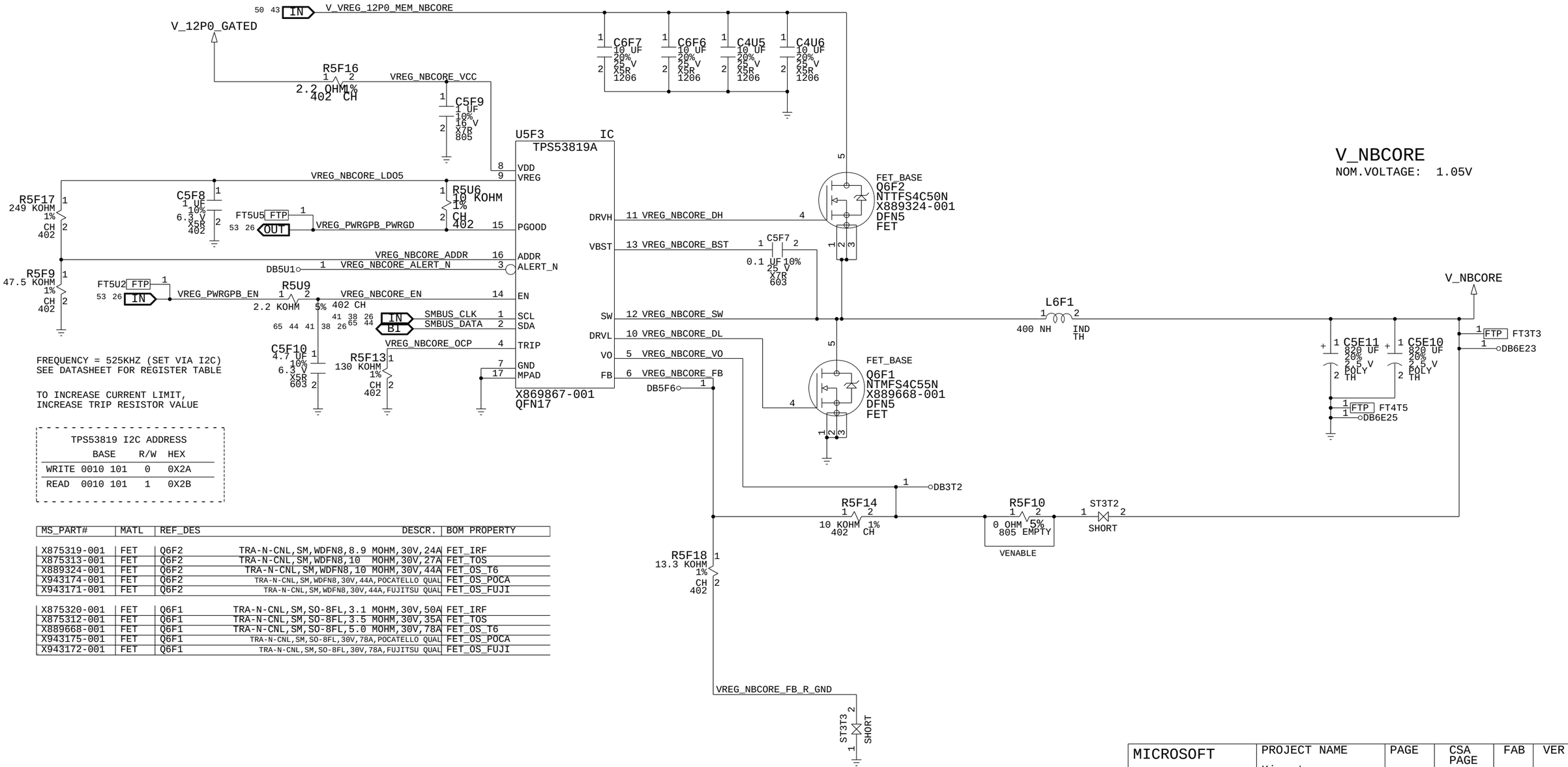

FREQUENCY = 525KHZ (SET VIA I2C)
SEE DATASHEET FOR REGISTER TABLE

TO INCREASE CURRENT LIMIT,
INCREASE TRIP RESISTOR VALUE

TPS53819 I2C ADDRESS

BASE	R/W	HEX
WRITE 0010 101	0	0X2A
READ 0010 101	1	0X2B

V_NBCORE
NOM.VOLTAGE: 1.05V

MS_PART#	MATL	REF_DES	DESCR.	BOM PROPERTY
X875319-001	FET	Q6F2	TRA-N-CNL,SM,WDFN8,8.9 MOHM,30V,24A	FET_IRF
X875313-001	FET	Q6F2	TRA-N-CNL,SM,WDFN8,10 MOHM,30V,27A	FET_TOS
X889324-001	FET	Q6F2	TRA-N-CNL,SM,WDFN8,10 MOHM,30V,44A	FET_OS_T6
X943174-001	FET	Q6F2	TRA-N-CNL,SM,WDFN8,30V,44A,POCATELLO QUAL	FET_OS_POCA
X943171-001	FET	Q6F2	TRA-N-CNL,SM,WDFN8,30V,44A,FUJITSU QUAL	FET_OS_FUJI
X875320-001	FET	Q6F1	TRA-N-CNL,SM,SO-8FL,3.1 MOHM,30V,50A	FET_IRF
X875312-001	FET	Q6F1	TRA-N-CNL,SM,SO-8FL,3.5 MOHM,30V,35A	FET_TOS
X889668-001	FET	Q6F1	TRA-N-CNL,SM,SO-8FL,5.0 MOHM,30V,78A	FET_OS_T6
X943175-001	FET	Q6F1	TRA-N-CNL,SM,SO-8FL,30V,78A,POCATELLO QUAL	FET_OS_POCA
X943172-001	FET	Q6F1	TRA-N-CNL,SM,SO-8FL,30V,78A,FUJITSU QUAL	FET_OS_FUJI

MICROSOFT CONFIDENTIAL	PROJECT NAME	PAGE	CSA PAGE	FAB	VER
	Kingston	49/72	49/72	G	1.01

MS_PART#	MATL	REF_DES	DESCR.	BOM PROPERTY
X875319-001	FET	Q9F1	TRA-N-CNL,SM,WDFN8,8.9 MOHM,30 V,24 A	FET_IRF
X875313-001	FET	Q9F1	TRA-N-CNL,SM,WDFN8,10 MOHM,30 V,27 A	FET_TOS
X889324-001	FET	Q9F1	TRA-N-CNL,SM,WDFN8,10 MOHM,30 V,44 A	FET_OS_T6
X943174-001	FET	Q9F1	TRA-N-CNL,SM,WDFN8,30V,44A,POCATELLO QUAL	FET_OS_POCA
X943171-001	FET	Q9F1	TRA-N-CNL,SM,WDFN8,30V,44A,FUJITSU QUAL	FET_OS_FUJI

X875319-001	FET	Q9F2	TRA-N-CNL,SM,WDFN8,8.9 MOHM,30 V,24 A	FET_IRF
X875313-001	FET	Q9F2	TRA-N-CNL,SM,WDFN8,10 MOHM,30 V,27 A	FET_TOS
X889324-001	FET	Q9F2	TRA-N-CNL,SM,WDFN8,10 MOHM,30 V,44 A	FET_OS_T6
X943174-001	FET	Q9F2	TRA-N-CNL,SM,WDFN8,30V,44A,POCATELLO QUAL	FET_OS_POCA
X943171-001	FET	Q9F2	TRA-N-CNL,SM,WDFN8,30V,44A,FUJITSU QUAL	FET_OS_FUJI

Q9F2 MATCHES Q9F1

VREG: MEMIO

V_MEMIO
NOM. VOLTAGE: 1.50

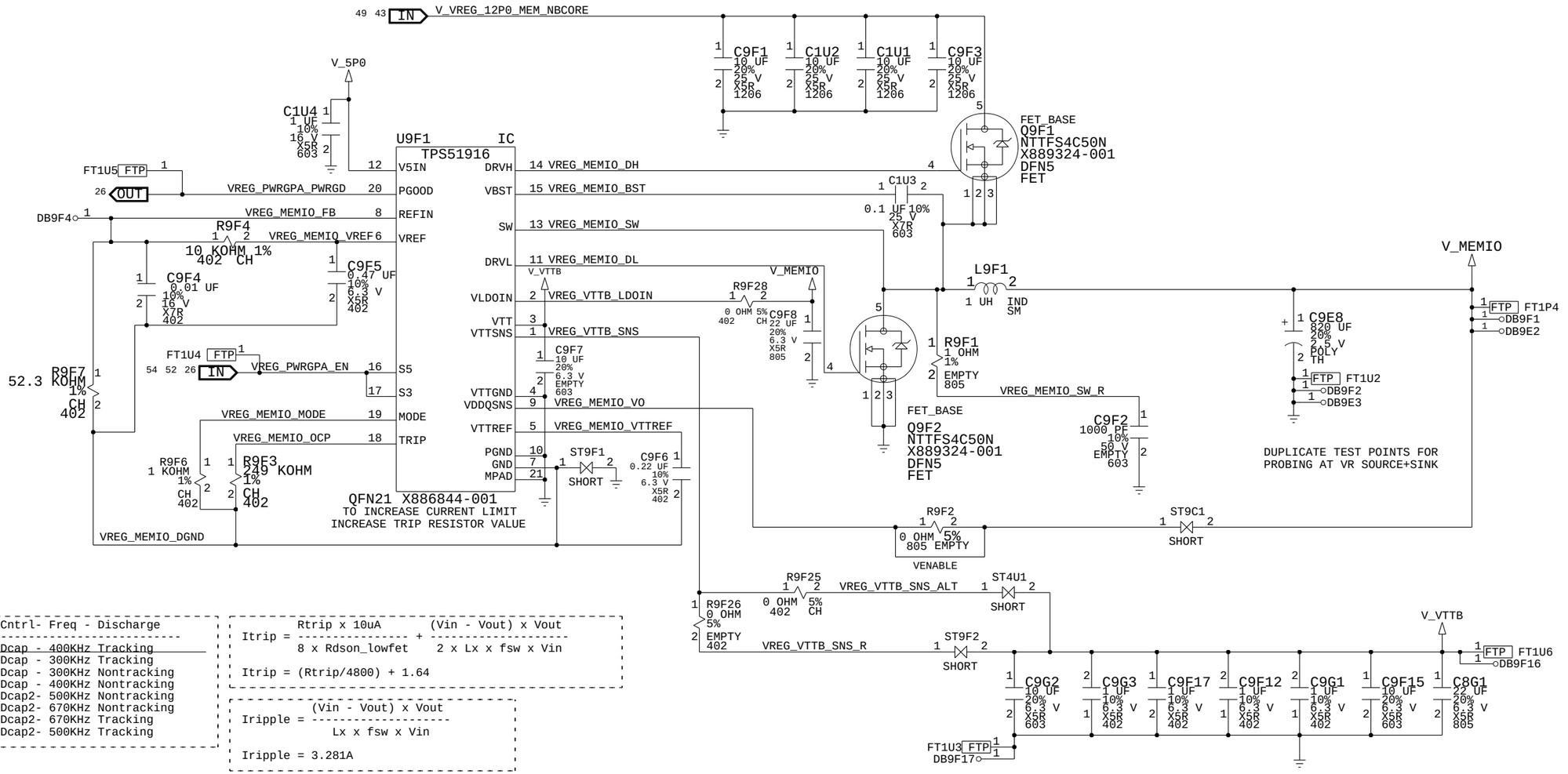

Rmode	Cntrl- Freq - Discharge
200K	Dcap - 400KHz Tracking
100K	Dcap - 300KHz Tracking
68K	Dcap - 300KHz Nontracking
47K	Dcap - 400KHz Nontracking
33K	Dcap2- 500KHz Nontracking
22K	Dcap2- 670KHz Nontracking
12K	Dcap2- 670KHz Tracking
1K	Dcap2- 500KHz Tracking

$$Itrip = \frac{Rtrip \times 10uA}{8 \times Rdson\_lowfet} + \frac{(Vin - Vout) \times Vout}{2 \times Lx \times fsw \times Vin}$$

$$Itrip = (Rtrip/4800) + 1.64$$

$$Iripple = \frac{(Vin - Vout) \times Vout}{Lx \times fsw \times Vin}$$

$$Iripple = 3.281A$$

$$Vout = \frac{1.8 \times R2}{R1 + R2} + \frac{Iripple \times ESR}{2}$$

$$Vout = 1.8\ R2/(R1+R2) + 0.010$$

MICROSOFT CONFIDENTIAL	PROJECT NAME	PAGE	CSA PAGE	FAB	VER
	Kingston	50/72	50/72	G	1.01

VREGS: V5P0

V_5P0
NOM. VOLTAGE: 5.09

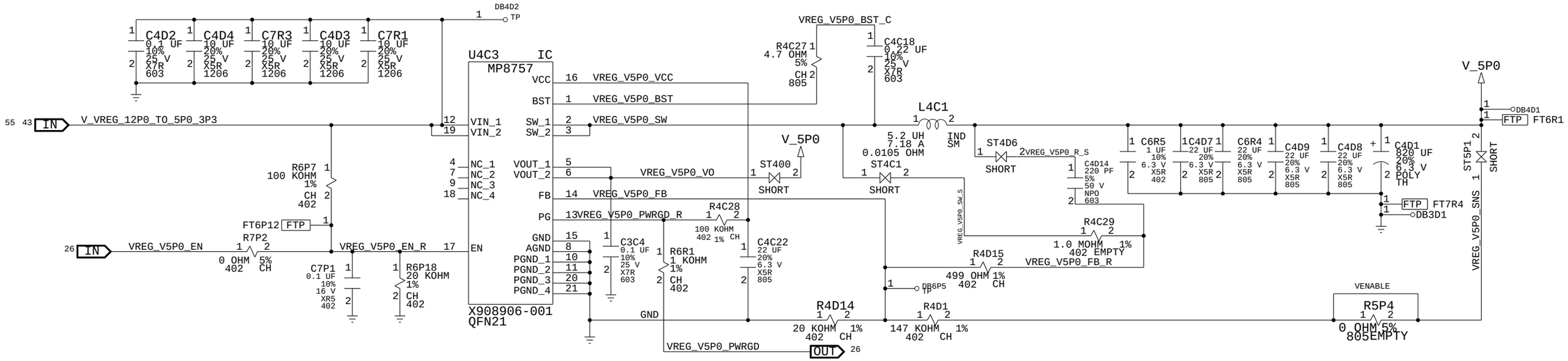

MICROSOFT CONFIDENTIAL	PROJECT NAME	PAGE	CSA PAGE	FAB	VER
	Kingston	51/72	51/72	G	1.01

VREGS: V3P3, VS0C1P8

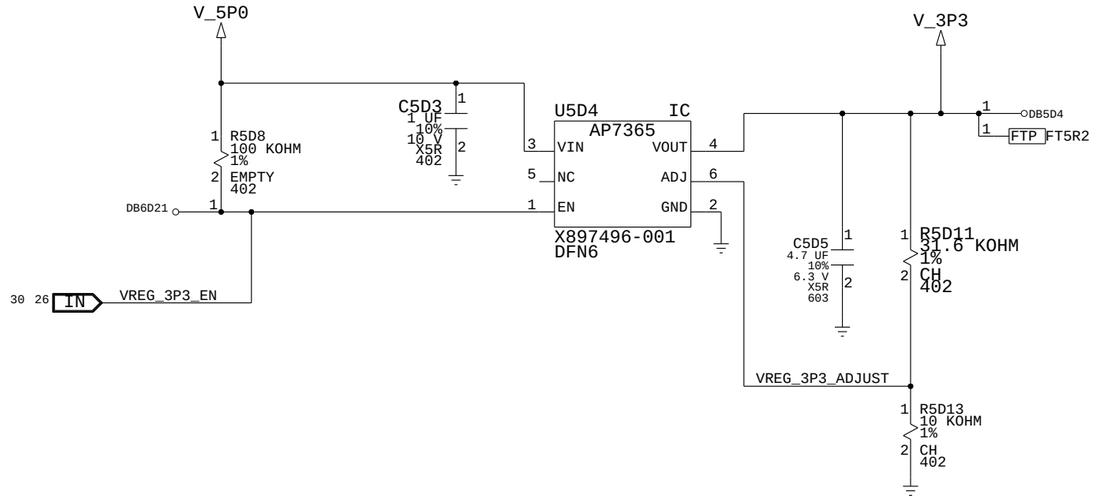

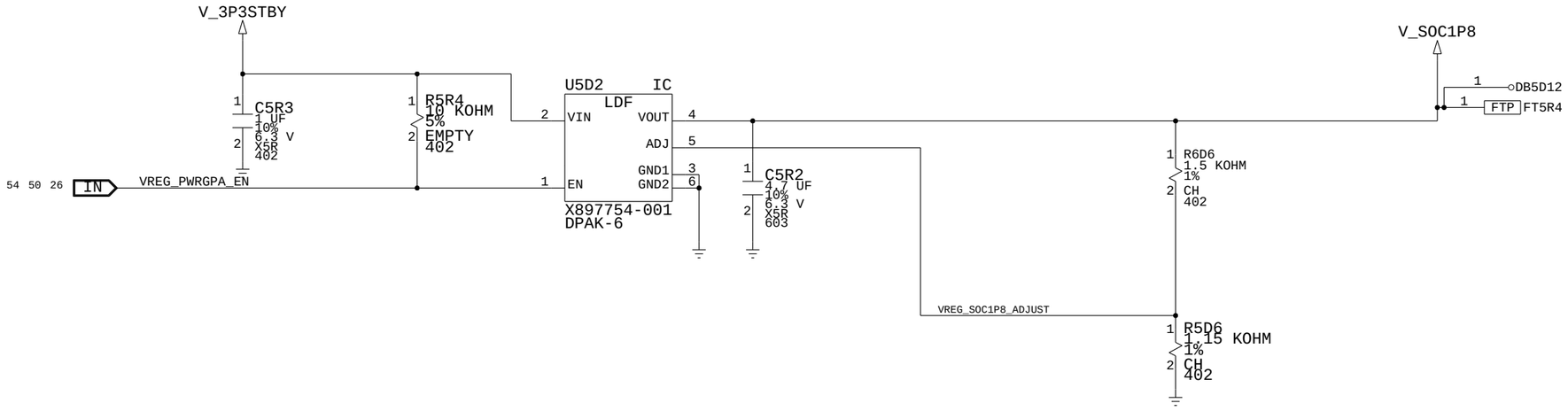

MICROSOFT CONFIDENTIAL	PROJECT NAME	PAGE	CSA PAGE	FAB	VER
	Kingston	52/72	52/72	G	1.01

VREGS: VSOCPHY/VFUSE

V_SOCPHY
NOM. VOLTAGE: 0.95

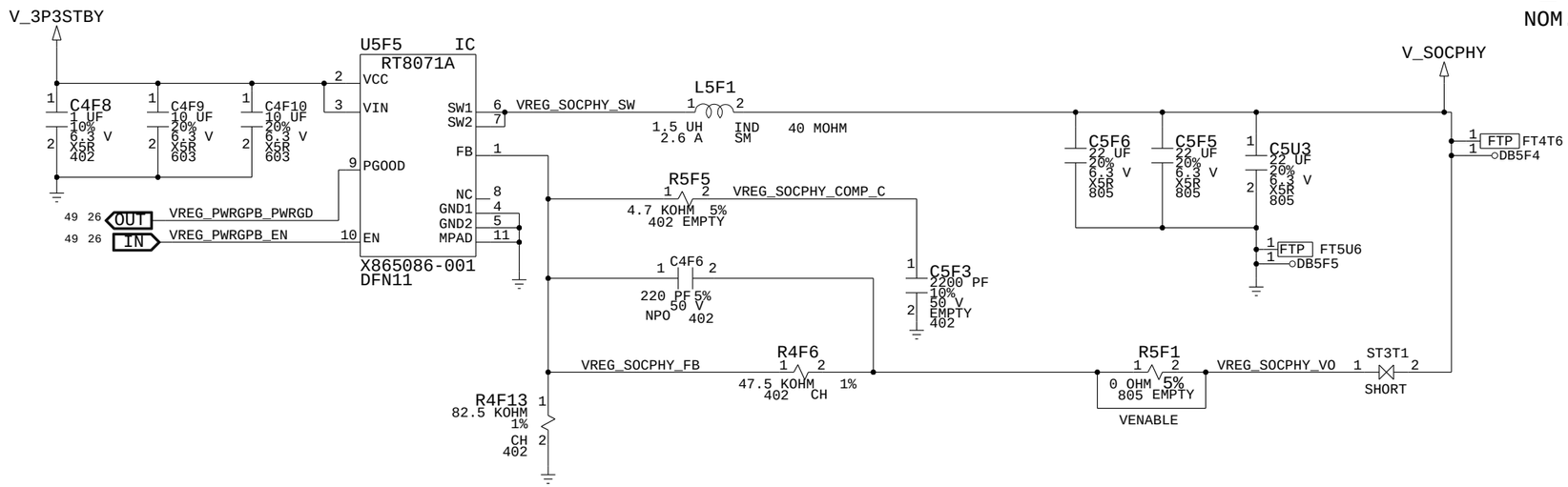

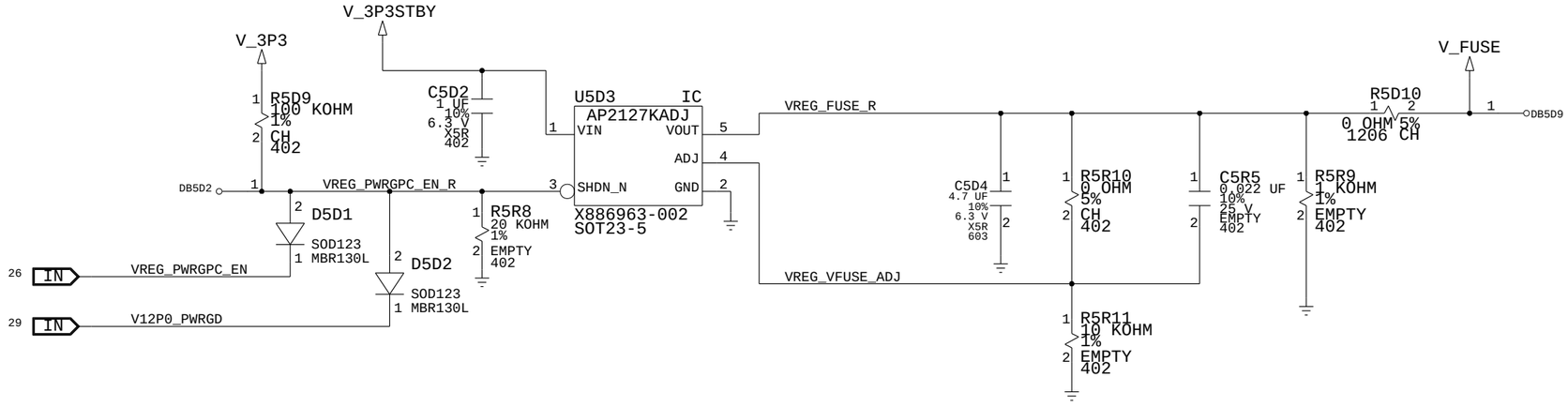

MICROSOFT CONFIDENTIAL	PROJECT NAME	PAGE	CSA PAGE	FAB	VER
	Kingston	53/72	53/72	G	1.01

VREGS: V_SB1P8, V_SB1P1

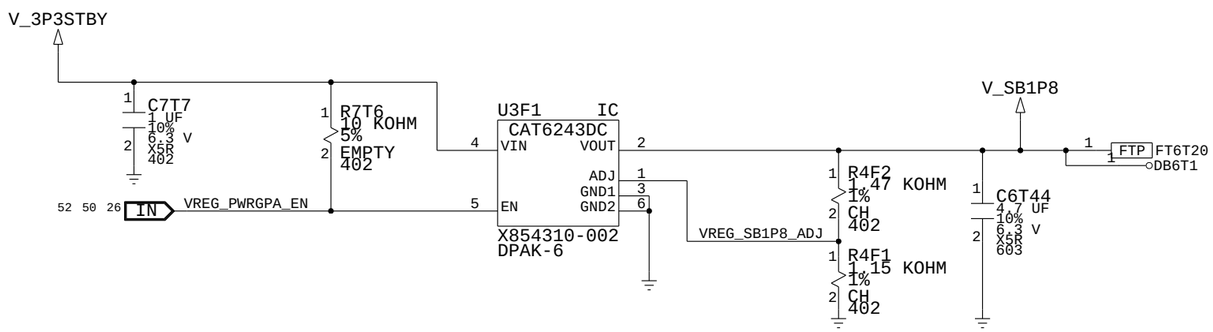

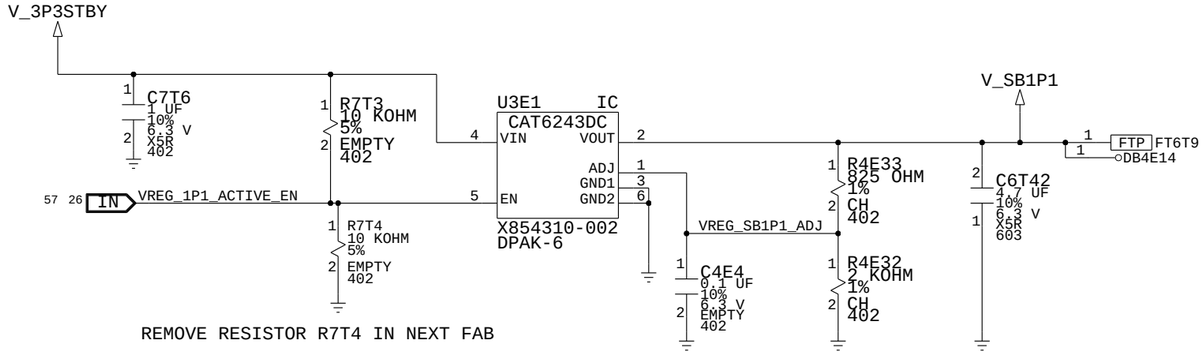

REMOVE RESISTOR R7T4 IN NEXT FAB

MICROSOFT CONFIDENTIAL	PROJECT NAME	PAGE	CSA PAGE	FAB	VER
	Kingston	54/72	54/72	G	1.01

VREGS: V3P3 STANDBY

V_3P3STBY
NOM. VOLTAGE: 3.31

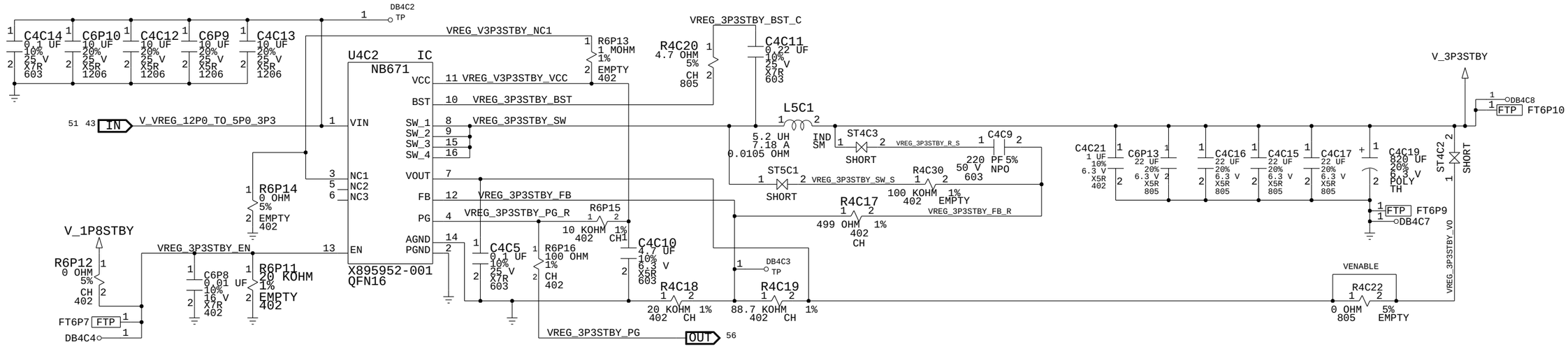

MICROSOFT CONFIDENTIAL	PROJECT NAME	PAGE	CSA PAGE	FAB	VER
	Kingston	55/72	55/72	G	1.01

VREGS: V1P1 STANDBY, V1P8 STANDBY

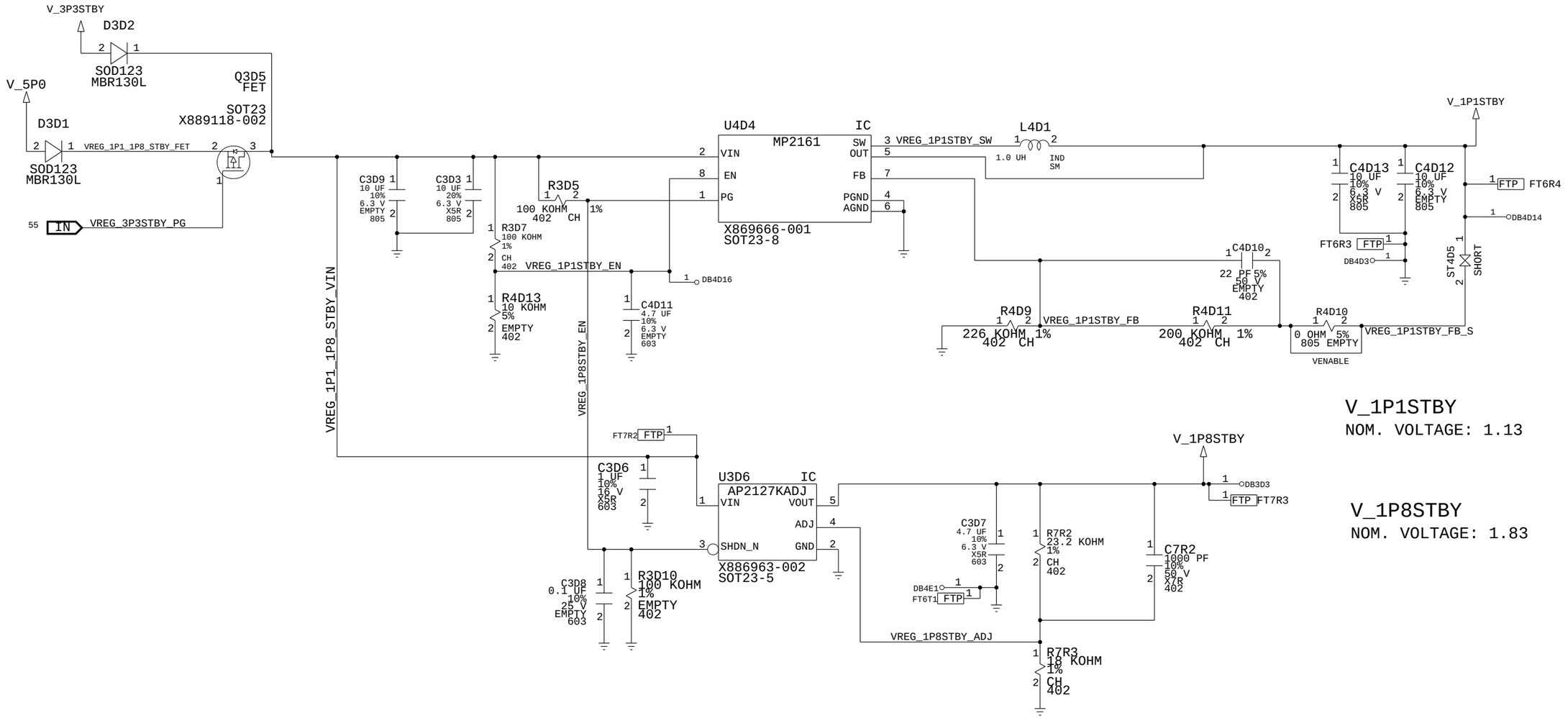

V_1P1STBY
NOM. VOLTAGE: 1.13

V_1P8STBY
NOM. VOLTAGE: 1.83

MICROSOFT CONFIDENTIAL	PROJECT NAME	PAGE	CSA PAGE	FAB	VER
	Kingston	56/72	56/72	G	1.01

STANDBY GATES

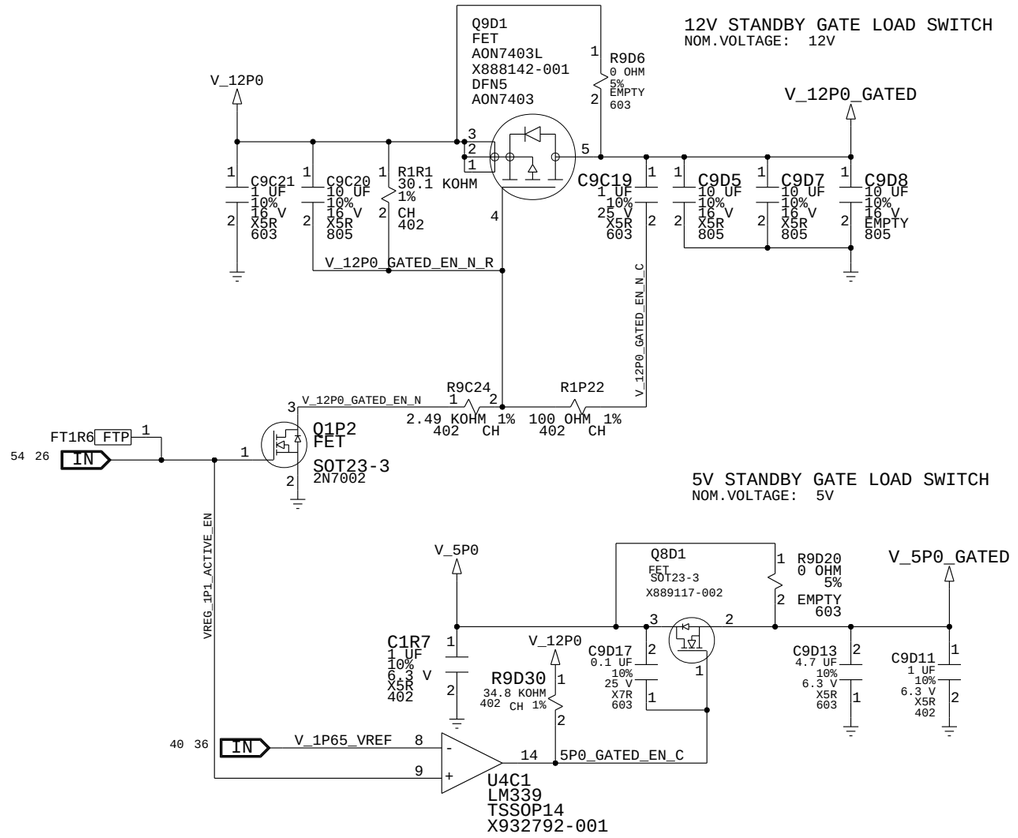

MICROSOFT CONFIDENTIAL	PROJECT NAME	PAGE	CSA PAGE	FAB	VER
	Kingston	57/72	57/72	G	1.01

IR BLASTER

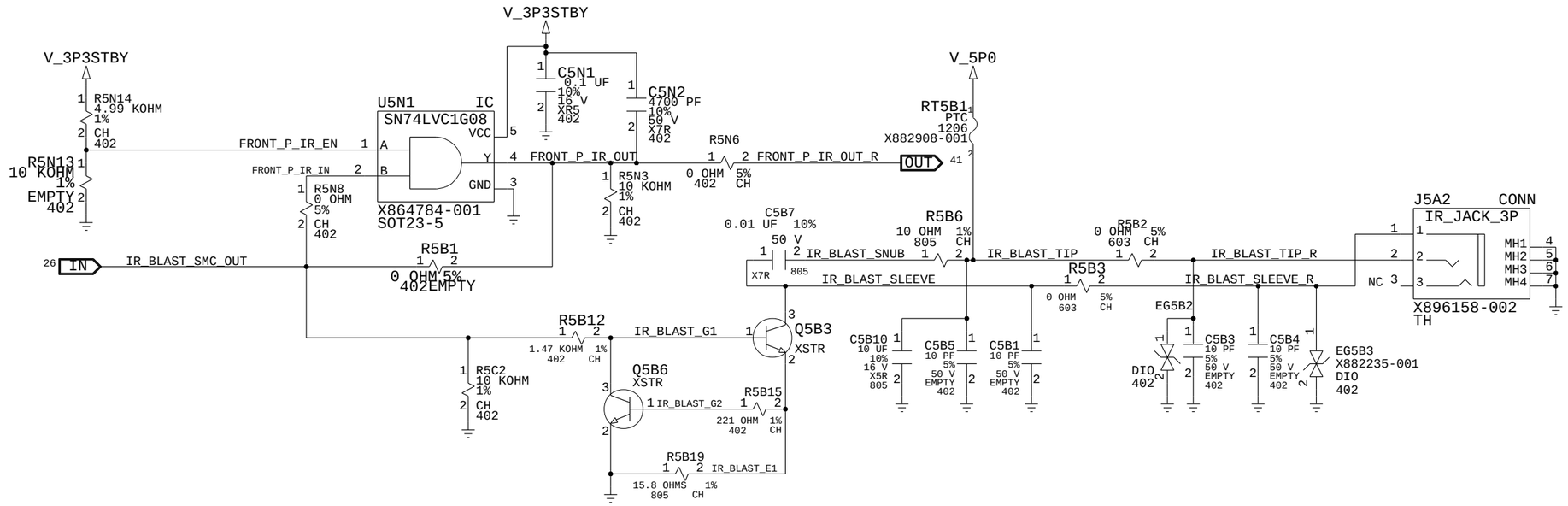

MICROSOFT CONFIDENTIAL	PROJECT NAME	PAGE	CSA PAGE	FAB	VER
	Kingston	58/72	58/72	G	1.01

I2C

BLANK

MICROSOFT CONFIDENTIAL	PROJECT NAME	PAGE	CSA PAGE	FAB	VER
	Kingston	59/72	59/72	G	1.01

MARGIN: SOCPHY,SOC1P8,MEMIO,NBCORE

BLANK

MICROSOFT CONFIDENTIAL	PROJECT NAME	PAGE	CSA PAGE	FAB	VER
	Kingston	60/72	60/72	G	1.01

V_BAT

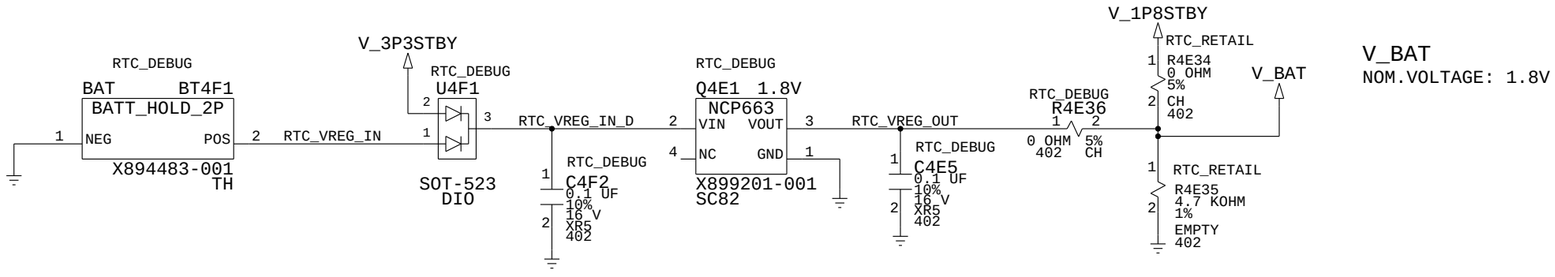

V_BAT
NOM.VOLTAGE: 1.8V

MS_PART#	MATL	REF_DES	DESCR.	BOM PROPERTY
X895557-001	BAT	COIN_CELL1	BAT-COIN,OTH,3 V,OTHER,OTH,2032(VARTA QUAL)	BAT_VARTA

VARTA MAXIMUM OPERATING TEMP 70C

MICROSOFT CONFIDENTIAL	PROJECT NAME	PAGE	CSA PAGE	FAB	VER
	Kingston	61/72	61/72	G	1.01

MONITOR: NBCORE,MEMIO

BLANK

MICROSOFT CONFIDENTIAL	PROJECT NAME	PAGE	CSA PAGE	FAB	VER
	Kingston	62/72	62/72	G	1.01

MONITOR: VSOC1P8,VSOCPHY

BLANK

MICROSOFT CONFIDENTIAL	PROJECT NAME	PAGE	CSA PAGE	FAB	VER
	Kingston	63/72	63/72	G	1.01

MONITOR: V12P0

BLANK

MICROSOFT CONFIDENTIAL	PROJECT NAME	PAGE	CSA PAGE	FAB	VER
	Kingston	64/72	64/72	G	1.01

CONN: FACET BOARD

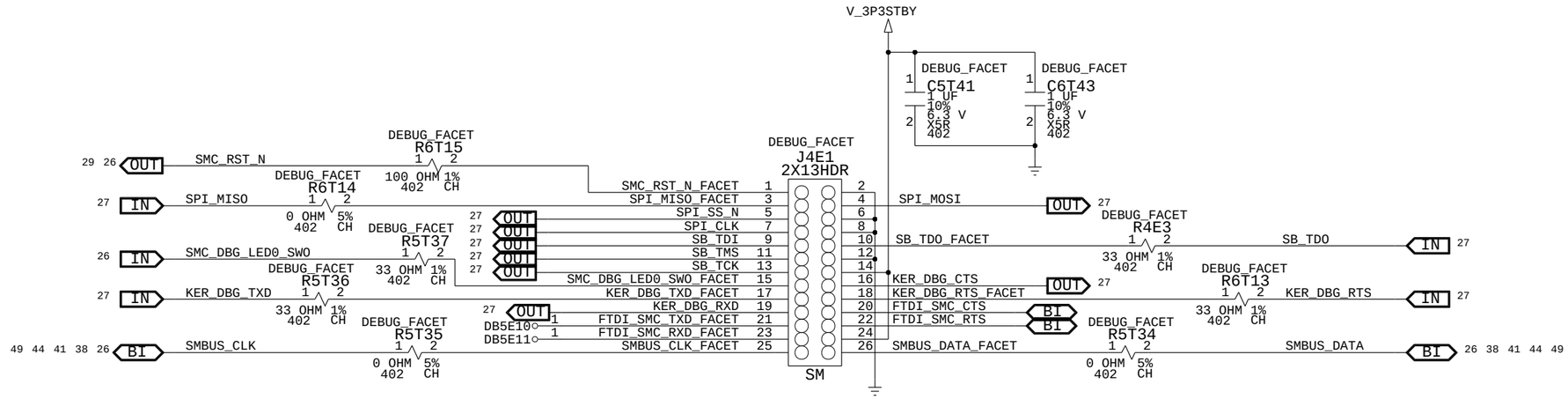

MICROSOFT CONFIDENTIAL	PROJECT NAME	PAGE	CSA PAGE	FAB	VER
	Kingston	65/72	65/72	G	1.01

CONN: SWITCHES

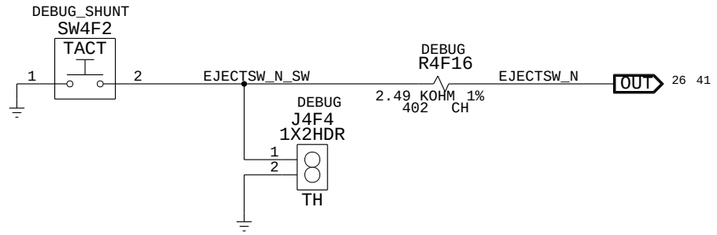

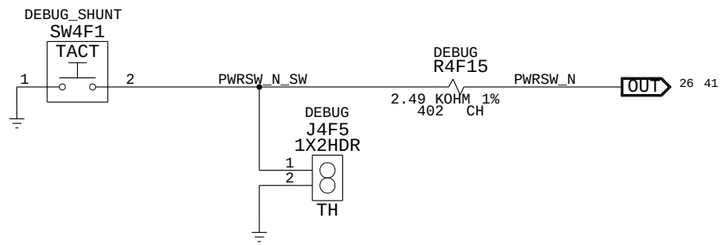

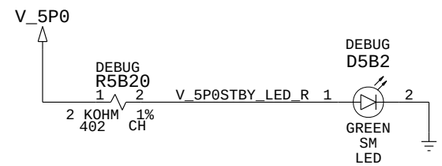

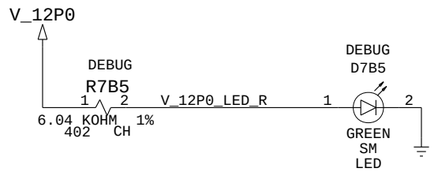

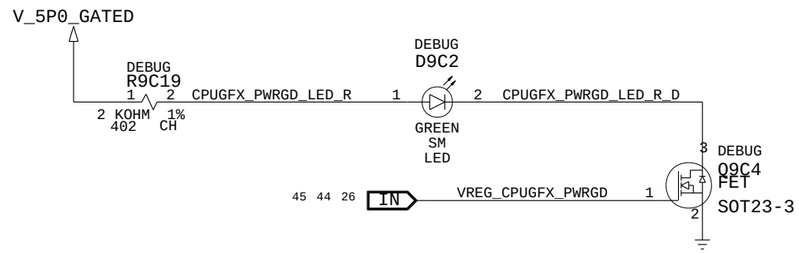

MICROSOFT CONFIDENTIAL	PROJECT NAME	PAGE	CSA PAGE	FAB	VER
	Kingston	66/72	66/72	G	1.01

CONN: HDT

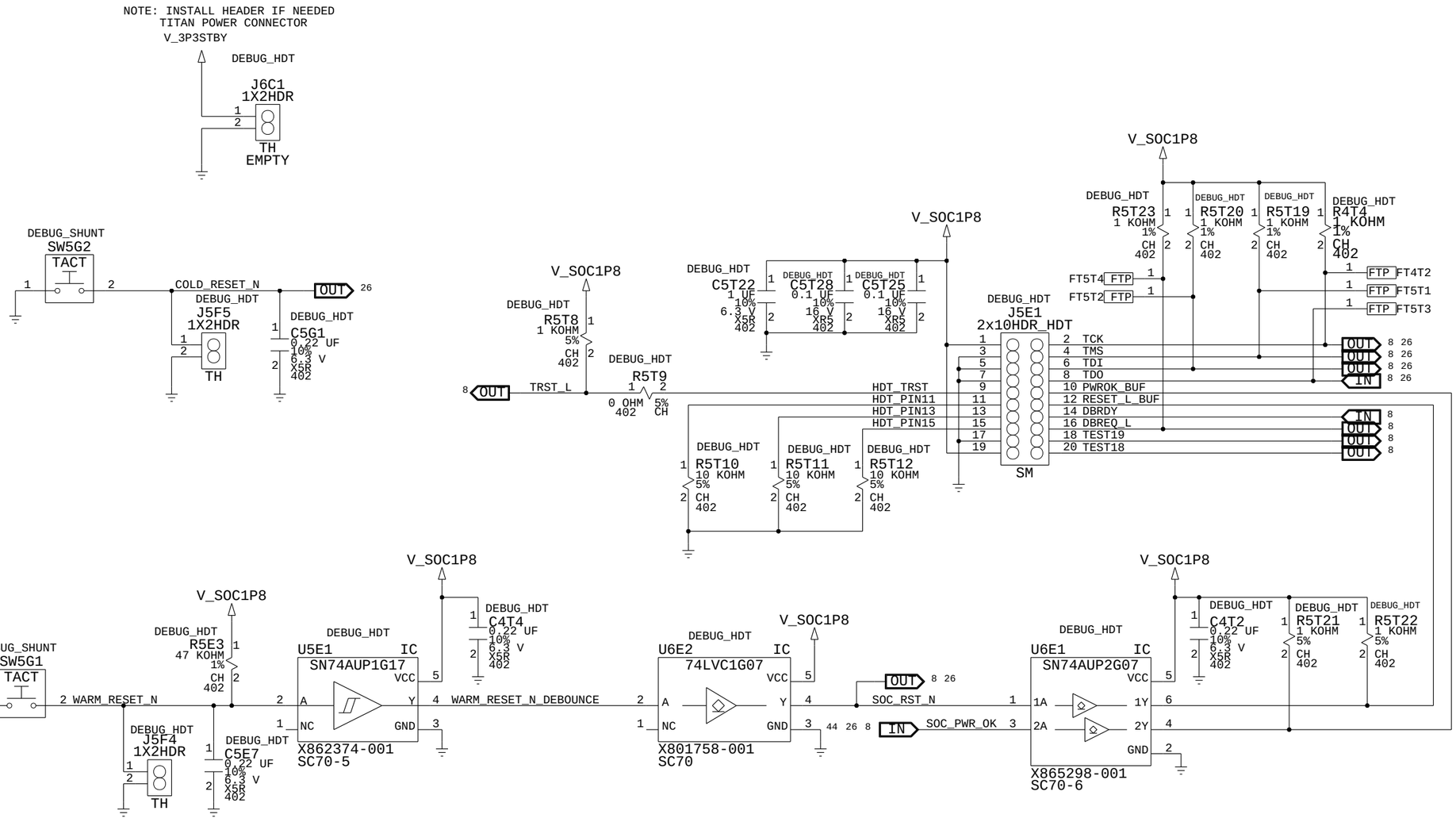

MICROSOFT CONFIDENTIAL	PROJECT NAME	PAGE	CSA PAGE	FAB	VER
	Kingston	67/72	67/72	G	1.01

DEBUG: V_BURN

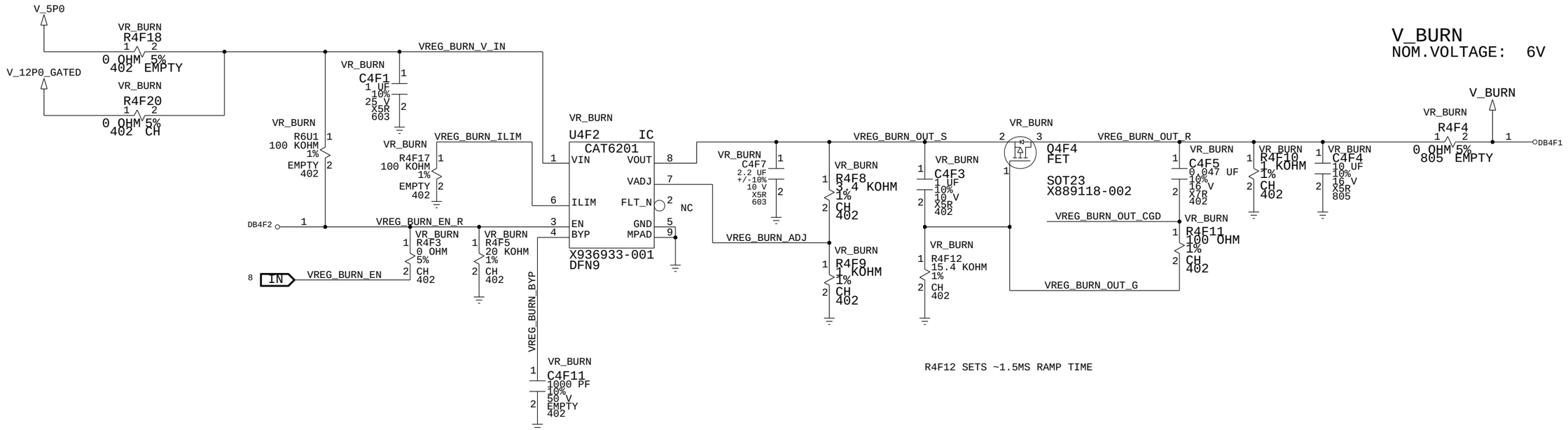

MICROSOFT CONFIDENTIAL	PROJECT NAME	PAGE	CSA PAGE	FAB	VER
	Kingston	68/72	68/72	G	1.01

DEBUG: VR HEADERS & TEST POINTS

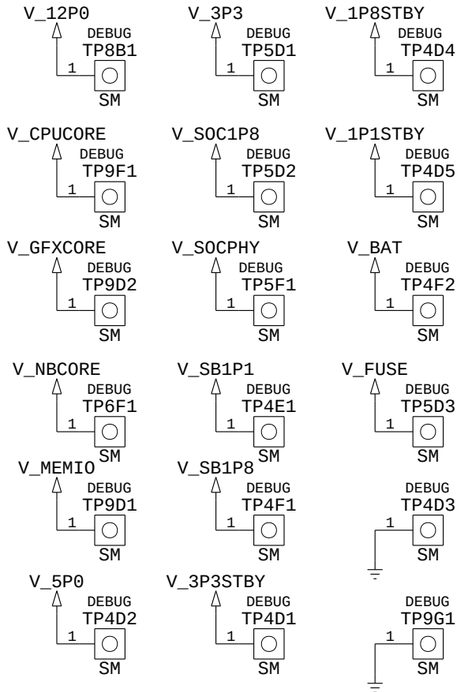

MICROSOFT CONFIDENTIAL	PROJECT NAME	PAGE	CSA PAGE	FAB	VER
	Kingston	69/72	69/72	G	1.01

DEBUG: CONNECTORS

BLANK

MICROSOFT CONFIDENTIAL	PROJECT NAME	PAGE	CSA PAGE	VER
	Kingston	70/72	70/72	1.01

LABELS AND MOUNTING

HEAT SINK MOUNTING HOLES

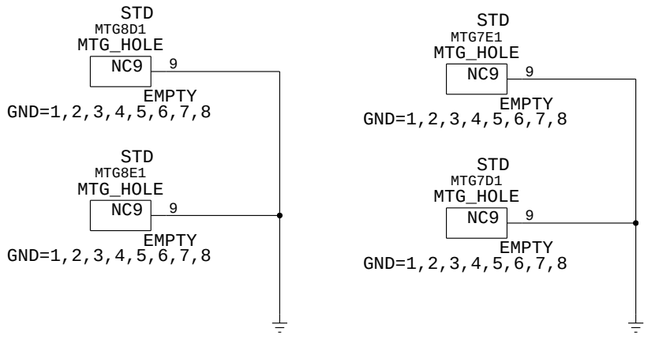

SCREW BOSS

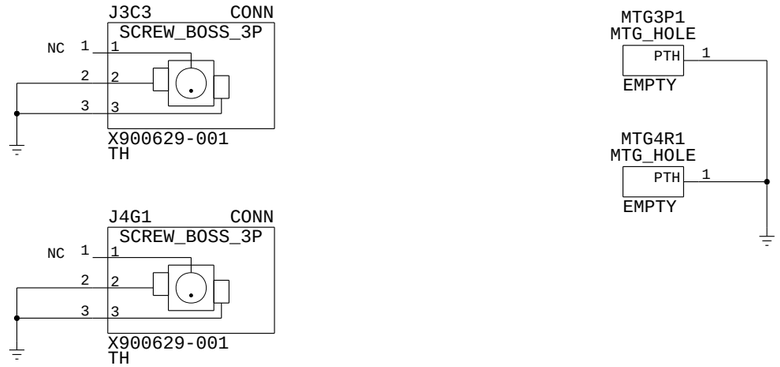

INTELLIGENT SERIAL NUMBER TARGET

LB5G1
X801181-001
LABEL

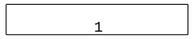

1375X250_TARGET

MS_PART#	MATL	REF_DES	DESCR.	BOM PROPERTY
X947889-001	FR4	PCB1	PCB-RIGID,RETAIL,FAB G,6L,FR4,OSP	PCB_OSP

MICROSOFT CONFIDENTIAL	PROJECT NAME	PAGE	CSA PAGE	FAB	VER
	Kingston	71/72	71/72	G	1.01

BOM DEFINITIONS

BOM	DEFINTION
AUX	HDMI STUFFING OPTION. NEVER USED IN PRODUCTION. REWORK PURPOSES ONLY
COMMON	ALL COMPONENTS WITH NO BOM PROPERTY
DDC	HDMI STUFFING OPTION. ALWAYS USED IN PRODUCTION
DDR_BASE	DUMMY PLACE HOLDER FOR DDR3 DEVICES. NEVER USE THIS IN THE RECIPE FILE. SELECT ONE OF THESE 3 INSTEAD: DDR_HYNIX, DDR_MICRON, DDR_SAMSUNG
DDR_HYNIX	HYNIX DDR3
DDR_MICRON	MICRON DDR3
DDR_SAMSUNG	SAMSUNG DDR3
DEBUG	COMPONENTS REQUIRED FOR BRING UP & DEBUG
DEBUG_HDT	HDT-RELATED DEBUG COMPONENTS
DEBUG_HDMI	DEBUG HDMI CONNECTOR USED 8L DEBUG BOARDS
DEBUG_SHUNT	COMPONENTS WHICH ARE ON DEBUG BOARDS, BUT ARE REMOVED/SHORTED ON RETAIL
EMMC_BASE	DUMMY PLACE HOLDER FOR EMMC DEVICE & RESISTORS. NEVER USE THIS IN THE RECIPE FILE. SELECT ONE OF THESE INSTEAD: EMMC_HYNIX_20NM, EMMC_HYNIX_5P0, EMMC_HYNIX_1XNM, EMMC_SAMSUNG AND EMMC_TOSHIBA
EMMC_HYNIX_5P0	HYNIX EMMC V5.0 EMMC DEVICE
FET_BASE	DUMMY PLACE HOLDER FOR HIGH AND LOW FETS. NEVER USE THIS IN THE RECIPE FILE. SELECT ONE OF THESE INSTEAD: FET_AOS, FET_OS_T6, FET_STM, OR FET_TOS
FET_IRF	INTERNATIONAL RECTIFIER FETS USED FOR VOLTAGE REGUALTORS
FET_OS_T6	ON-SEMI T6 FETS USED FOR VOLTAGE REGULATORS
FET_STM	STMICROELECTRONICS FETS USED FOR VOLTAGE REGULATORS
FET_TOS	TOSHIBA FETS USED FOR VOLTAGE REGULATORS
GARFIELD	CONTAINS GARFIELD (SOC) RELATED PASSIVE/ACTIVE COMPONENTS
KIC_BASE	DUMMY PLACE HOLDER FOR KIC. NEVER USE THIS IN THE RECIPE FILE. USE ONE OF THESE INSTEAD: KIC_DEV OR KIC_RETAIL
KIC_DEV	DEBUG VERSION OF KRAKEN
KIC_RETAIL	RETAIL VERSION OF KRAKEN
MEM_FIXED	SETS V_MEMIO TO A FIXED VOLTAGE (NON-MARGINED). MUST BE USED IN CONJUNCTION WITH NOT MEM_MM
MEM_MM	ALLOWS V_MEMIO TO BE MARGINED FOR M&M BOARDS. MUST BE USED IN CONJUNCTION WITH NOT MEM_FIXED
PANTHER	CONTAINS PANTHER (SOC) RELATED PASSIVE/ACTIVE COMPONENTS
PANTHER_SOC	PANTHER SYSTEM-ON-CHIP (SOC)
PANTHER_SOC_LP	PANTHER SYSTEM-ON-CHIP (SOC) LOW POWER VERSION
PCB_GI	FAB TYPE: GOLD
PCB_OSP	FAB TYPE: ORGANIC SOLDERABILITY PRESERVATIVE
RTC_RETAIL	RTC CIRCUIT IMPLEMENTATION FOR RETAIL BOARDS
RTC_DEBUG	RTC CIRCUIT IMPLEMENTATION FOR DEBUG BOARDS
SOC_BASE	DUMMY PLACE HOLDER FOR SOC
VR_FIXED	SET ALL VRS TO FIXED VOLTAGES (NON-MARGINED). EXCLUDES V_MEMIO. MUST BE USED IN CONJUNCTION WITH NOT VR_MM
VR_MM	ALLOWS MOST VRS TO BE MARGINED FOR M&M BOARDS. EXCLUDES V_MEMIO. MUST BE USED IN CONJUNCTION WITH NOT VR_FIXED
VRTB	BOOT STRAPPING RESISTOR ONLY TO BE POPULATED WHEN BUILDING VOLTAGE REGULATOR TEST BOARD WHICH CONTAINS NO SOC
WW	CAPACITORS WHICH NEED TO BE NO-STUFFED WHEN AI CPU/GPU SOCKET IS INSTALLED