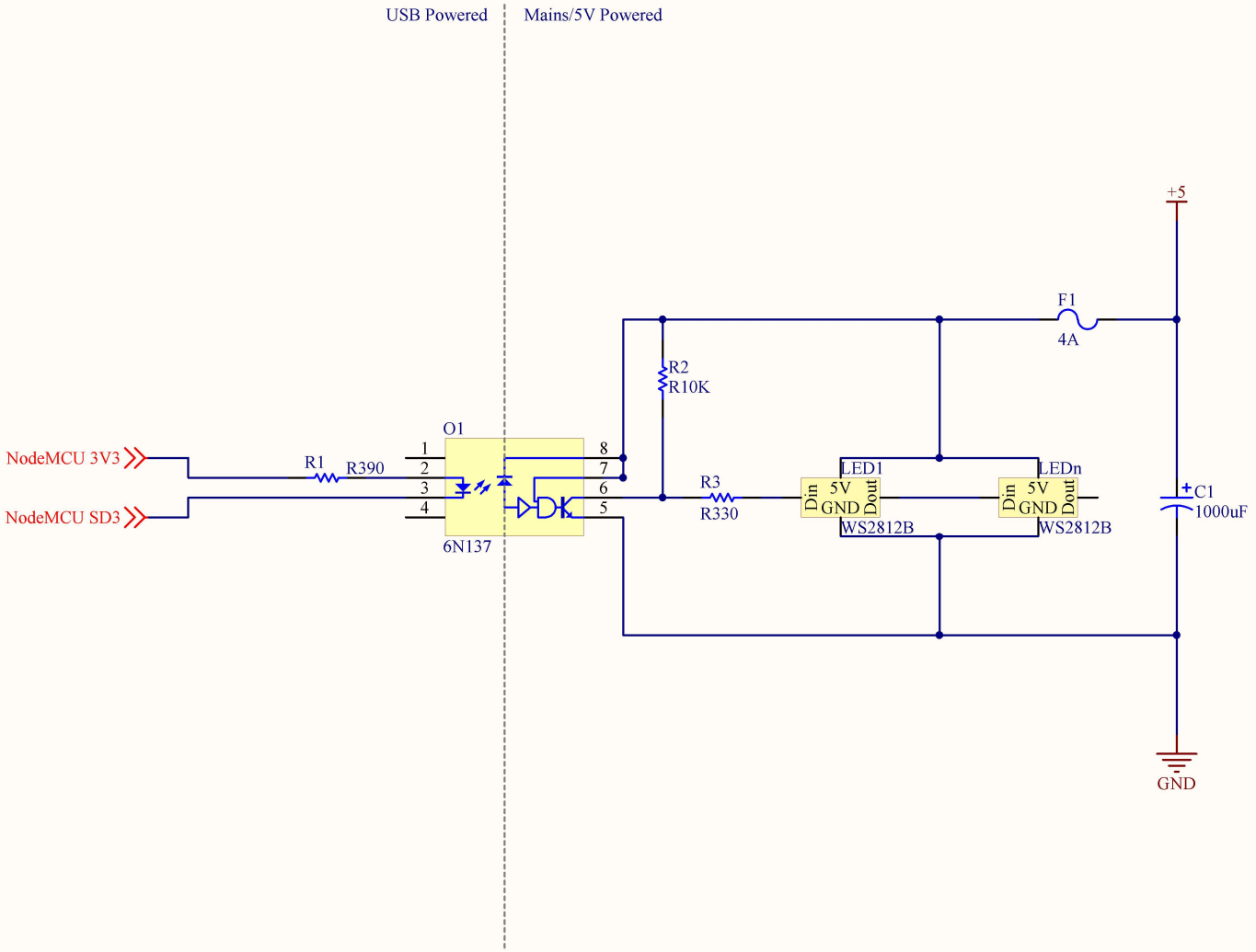

Title		
Size A	Number	Revision
Date: 05-Mar-18		Sheet of
File: Device.SchDoc		Drawn By: