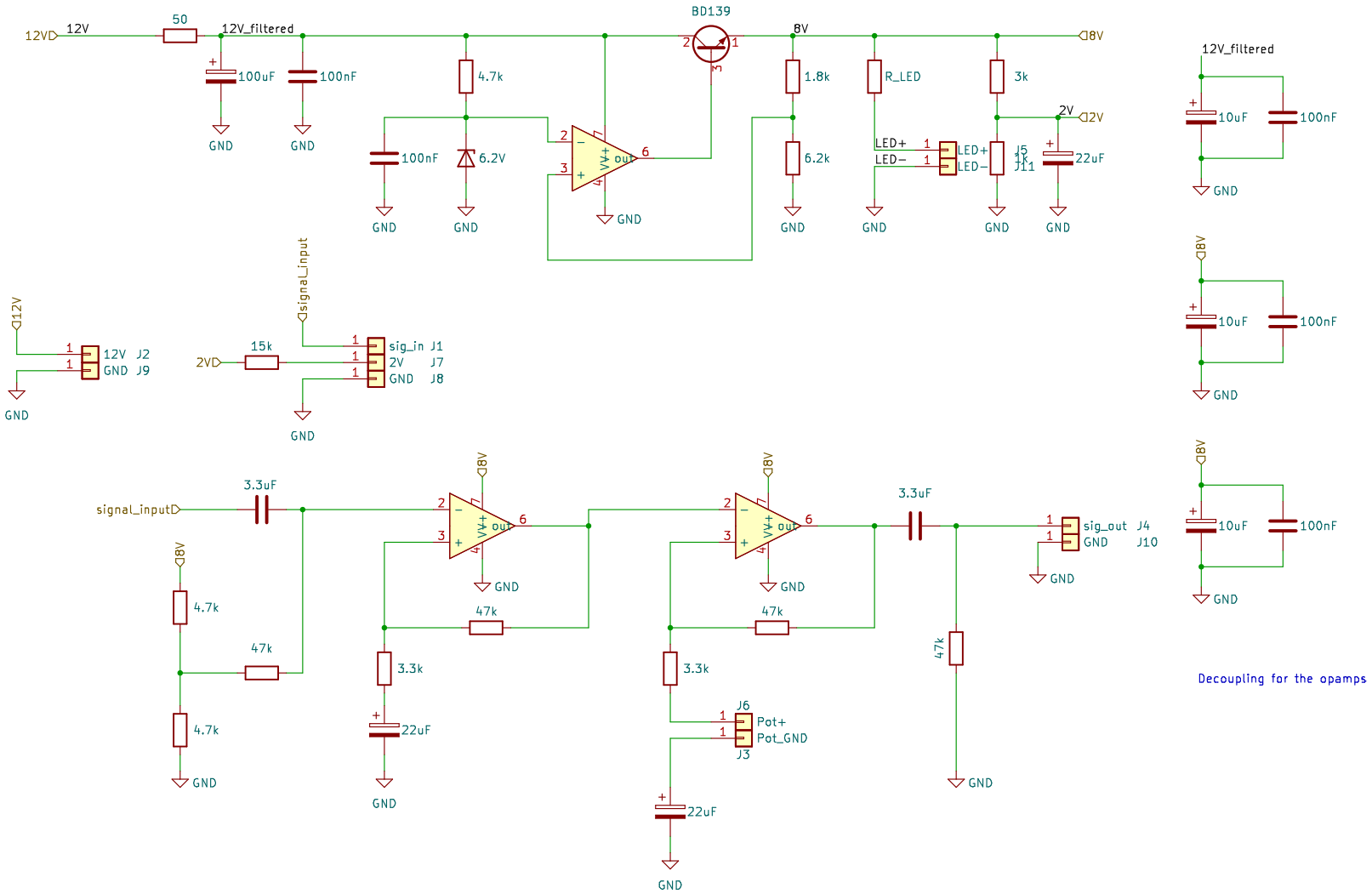

H1 MountingHole

H2 MountingHole

H3 MountingHole

H4 MountingHole

Sheet: /
File: high_quality_DIY_microphone_narrow.kicad_sch

Title: Mikrofonverstärker

Size: A4	Date: 2023-09-23	Rev: A
KiCad E.D.A. kicad 7.0.11-7.0.11~ubuntu22.04.1		Id: 1/1