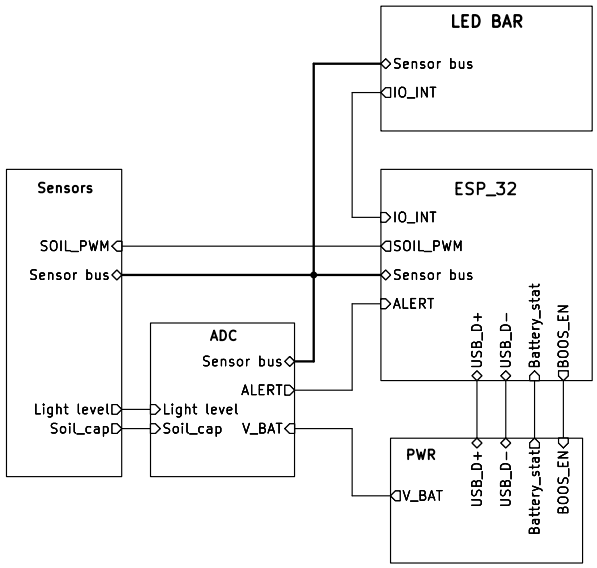

Block Diagram

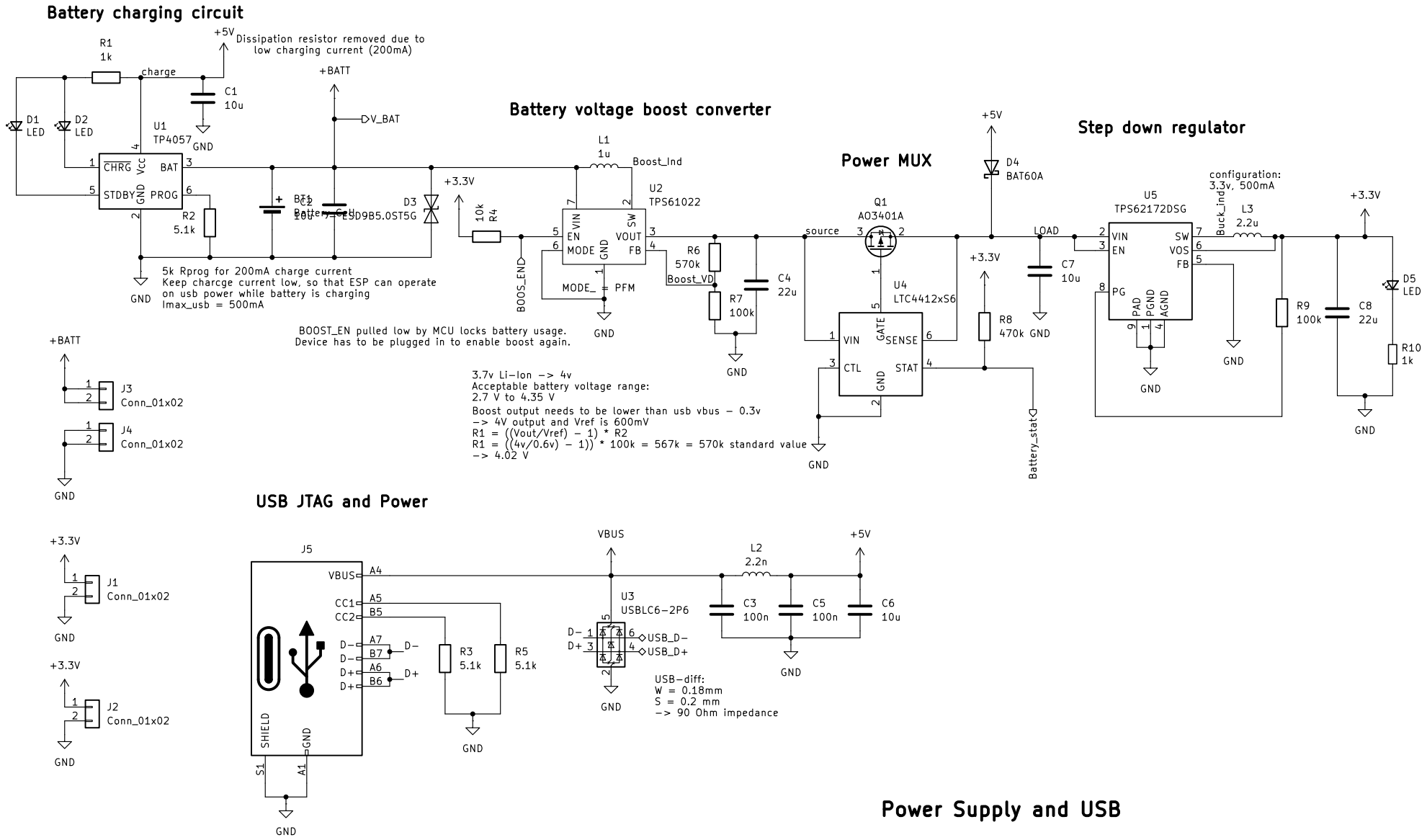
Battery charging circuit
Dissipation resistor removed due to low charging current (200mA)
R1 1k
charge
+5V
C1 10u
GND
D1 LED
D2 LED
U1 TP4057
CHRG
Vcc
BAT
STDBY
GND
PROG
R2 5.1k
+BATT
V_BAT
BT1 Battery_Cell
C2 10u
ESD9B5.0ST5G
D3
5k Rprog for 200mA charge current
Keep charcge current low, so that ESP can operate on usb power while battery is charging
Imax_usb = 500mA
Battery voltage boost converter
L1 1u
Boost_Ind
+3.3V
10k R4
U2 TPS61022
VIN
EN
MODE
GND
SW
VOUT
FB
MODE_ = PFM
BOOS_EN
R6 570k
Boost_VD
R7 100k
C4 22u
BOOST_EN pulled low by MCU locks battery usage.
Device has to be plugged in to enable boost again.
3.7v Li-Ion -> 4v
Acceptable battery voltage range:
2.7 V to 4.35 V
Boost output needs to be lower than usb vbus - 0.3v
-> 4V output and Vref is 600mV
R1 = ((Vout/Vref) - 1) * R2
R1 = ((4v/0.6v) - 1)) * 100k = 567k = 570k standard value
-> 4.02 V
Power MUX
Q1 AO3401A
source
U4 LTC4412xS6
VIN
CTL
GATE
SENSE
STAT
D4 BAT60A
R8 470k
Battery_stat
LOAD
C7 10u
Step down regulator
U5 TPS62172DSG
configuration: 3.3v, 500mA
Buck_ind
L3 2.2u
PG
PAD
PGND
AGND
R9 100k
C8 22u
D5 LED
R10 1k
J3 Conn_01x02
J4 Conn_01x02
USB JTAG and Power
J5
VBUS
CC1
CC2
D-
D+
SHIELD
S1
A1
R3 5.1k
R5 5.1k
U3 USBLC6-2P6
USB_D-
USB_D+
L2 2.2n
C3 100n
C5 100n
C6 10u
USB-diff:
W = 0.18mm
S = 0.2 mm
-> 90 Ohm impedance
J1 Conn_01x02
J2 Conn_01x02
Power Supply and USB

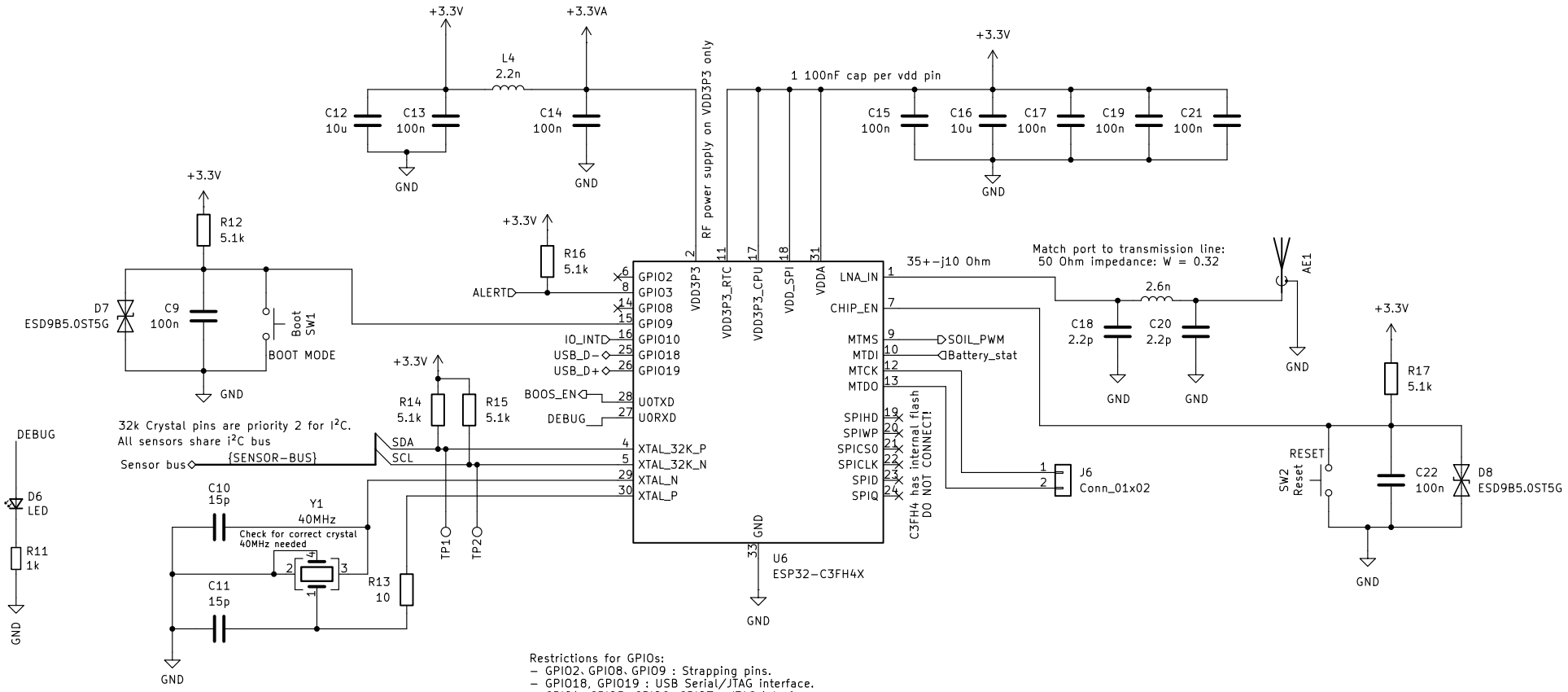

Restrictions for GPIOs:
- GPIO2、GPIO8、GPIO9 : Strapping pins.
- GPIO18, GPIO19 : USB Serial/JTAG interface.
- GPIO4, GPIO5, GPIO6, GPIO7 : JTAG interface.
- GPIO20, GPIO21 : UART0 interface.
- GPIO11 : The VDD_SPI pin. The power supply pin for flash by default, and can only be reconfigured as a GPIO pin if the flash is powered by an external power supply.

Default start up configuration
GPIO2 Floating –
GPIO8 Floating –
GPIO9 Weak pull-up 1

ESP32-C3 and Peripherals

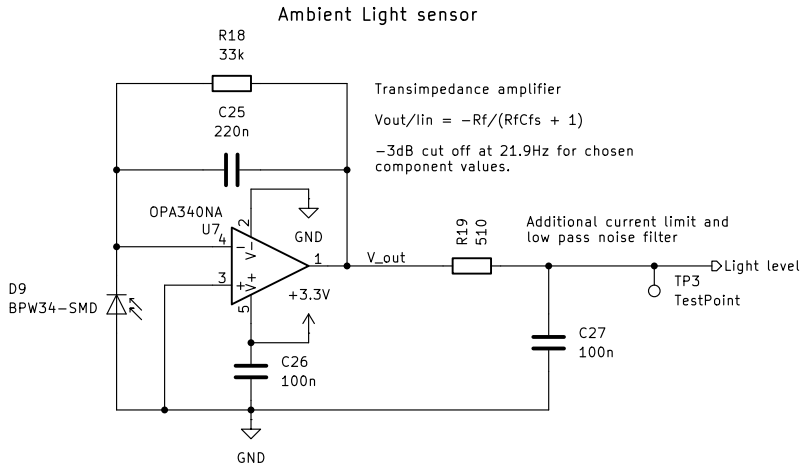
Ambient Light sensor
R18
33k
C25
220n
Transimpedance amplifier
Vout/Iin = −Rf/(RfCfs + 1)
−3dB cut off at 21.9Hz for chosen component values.
OPA340NA
U7
GND
R19
510
Additional current limit and low pass noise filter
V_out
Light level
TP3
TestPoint
D9
BPW34−SMD
+3.3V
C27
100n
C26
100n
GND

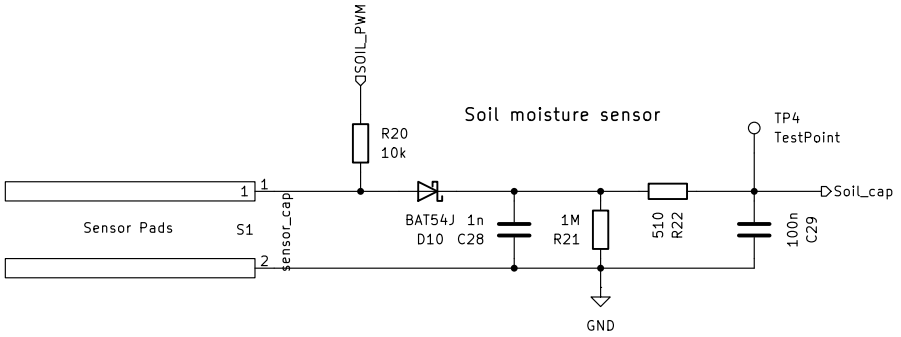
SOIL_PWM
Soil moisture sensor
TP4
TestPoint
R20
10k
Soil_cap
Sensor Pads
S1
sensor_cap
BAT54J 1n
D10 C28
1M
R21
510
R22
100n
C29
GND

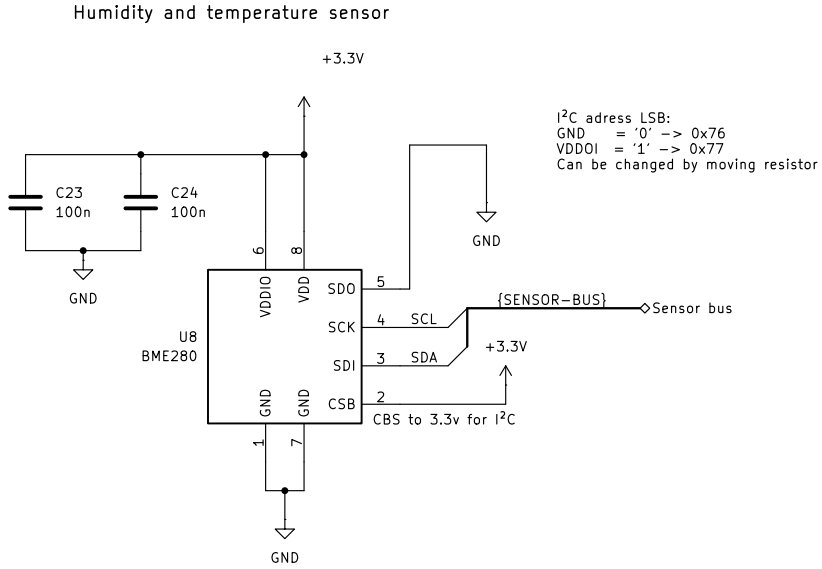
Humidity and temperature sensor
+3.3V
I²C adress LSB:
GND = '0' −> 0x76
VDDOI = '1' −> 0x77
Can be changed by moving resistor
C23
100n
C24
100n
GND
GND
U8
BME280
VDDIO
VDD
SDO
SCK
SDI
CSB
GND
GND
SCL
SDA
{SENSOR−BUS}
Sensor bus
+3.3V
CBS to 3.3v for I²C
GND

Sensors

16bit ADC for analog sensor inputs

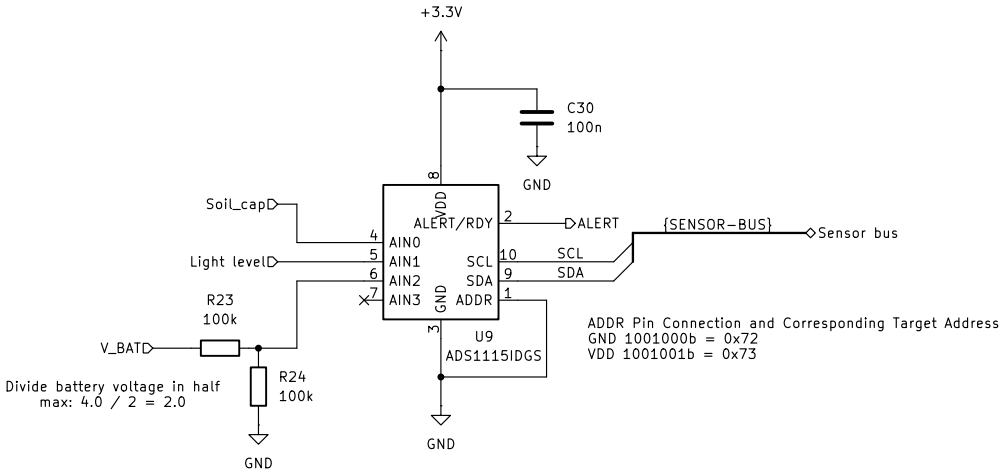

ADC

I2C I/O Expander for LED bar

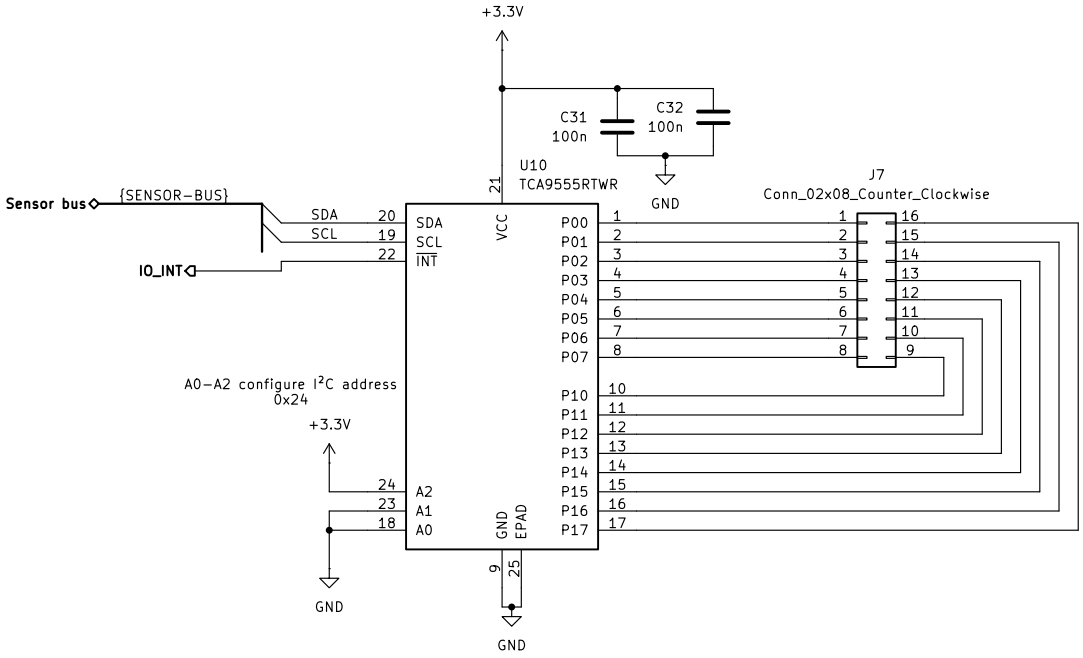

I/O Expander