ResearchGate

See discussions, stats, and author profiles for this publication at: https://www.researchgate.net/publication/322420178

Digital Signature and Authentication Mechanisms Using New Customized Hash Function for Cognitive Radio Networks

Conference Paper · December 2017

DOI: 10.1109/ICCES.2017.8275299

CITATIONS
2

READS
4,056

3 authors, including:

John N. Soliman
Ain Shams University
5 PUBLICATIONS **10** CITATIONS

SEE PROFILE

Hadia M. El-Hennawy
Ain Shams University,Faculty of Engineering,Cairo,Egypt
232 PUBLICATIONS **1,092** CITATIONS

SEE PROFILE

Some of the authors of this publication are also working on these related projects:

Project Network Security and Authentication for Cognitive Radio Networks (CRNs) and Software Defined Networking (SDN) View project

Project Radar Digital Signal Processing View project

All content following this page was uploaded by John N. Soliman on 01 February 2018.

The user has requested enhancement of the downloaded file.

Digital Signature and Authentication Mechanisms Using New Customized Hash Function For Cognitive Radio Networks

John N. Soliman
Communications & Electronics Engineering Department.
Ain-Shams University
Cairo, Egypt
john.n.soliman@ieee.org

Tarek Abdel Mageed
COMSEC Consultant, Ph.D.
Communications & Electronics Engineering Dept., El-Shorouk Higher Institute for Engineering
Cairo, Egypt
t.abdelmaged@sha.edu.eg

Hadia M. El-Hennawy
Professor in Communications & Electronics Engineering Department
Ain-Shams University
Cairo, Egypt
helhennawy@ieee.org

***Abstract*— Wireless technologies, applications and services have been witnessed a rapid growth in the past few years, due to this development, spectrum scarcity and shortage has become a major concern, several spectrum portions of the static allocated licensed bands are under-utilized. Cognitive radio networks (CRNs) are considered to be the most promising solution in improving the spectrum utilization and solving the spectrum scarcity by providing licensed spectrum portions to unlicensed users, however due to nature of these networks, CRNs are exposed to different types of threats and attacks from different malicious users, which can affect the network availability and performance, in this paper a proposed authentication mechanisms and digital signature scheme applied using new customized hash function for CRNs, the proposed model simulated and tested to provide both primary and secondary users data authentication, data integrity and non-repudiation in CRNs, achieving a defend strategy from the well-known attacks that could be launched by malicious, selfish users, threats and vulnerabilities in CRNs.**

Keywords*— *Authentication mechanisms, Cognitive Radio (CR), Cognitive Radio Networks (CRNs), Digital Signature, Hash collision, Hash function, Public key cryptography, Software Defined Radio (SDR), Spectrum management, Spectrum sensing.

I. INTRODUCTION

Radio spectrum is a valuable and natural resource that is used in the wireless communications services and applications, due to the rapid growth of wireless licensed users subsequently applications and services would demand a huge radio spectrum, which lead to radio spectrum limitation; resulting spectrum scarcity due to static allocation policy, to solve the spectrum underutilization dilemma, an intelligent radio system called cognitive radio (CR) has been revealed to solve the radio spectrum scarcity and shortage based on opportunistic spectrum access [1], this can be done by allowing unlicensed secondary users (SUs) to opportunistically, use the licensed radio spectrum holes or white spaces [2], without causing any interference to licensed primary users (PUs). Due to the intelligence and nature of CRNs, they are vulnerable to serious security attacks and threats from many malicious and selfish users that selfishly exploit the legitimate spectrum to their own interest and cause interference PUs compared to traditional wireless networks, that could affect the network performance, so security concerns are further escalated to the forefront and have taken on an increasingly important role in CRNs. therefore, it is very important to provide entities and data authentication especially the SUs inside CRNs, and achieve data integrity and non-repudiation and main security requirements to defend CRNs from well-known attacks. In this paper, a modified digital signature scheme (DSS) using a new customized cryptographic hash function and authentication mechanisms that implemented in CRNs, is introduced, the proposed hash function is tested and associated with RSA (Rivest, Shamir, Adleman), public key cryptography DSS algorithm, and then applied in a proposed CRNs, with authentication mechanisms, that is designed and simulated using OMNeT++, a discrete event simulator, the proposed system provides the main security requirements for CRNs, and managing the spectrum for authorized users.

This paper is organized in five sections: In section II cryptographic hash function design, security characteristics and its applications will be discussed, section III will focuses on the new customized hash function design, in section IV testing and comparing the proposed hash testing results with standard cryptographic hash function will be introduced, in section V testing and integration the proposed hash function with RSA-DSS applied with authentication mechanisms for CRNs, using OMNeT++, will be illustrated. Finally, section VI concludes the paper and discusses the security proofs and aspects for the proposed model.

The main contributions of this paper are summarized as follows: Design and testing a new keyless customized hash function and comparing the testing results with standard hash functions. Integration the proposed hash function with RSA-DSS to provide data integrity and authentication. Design and simulation CRNs model, using OMNeT++. Implementing the proposed model with digital signature scheme and authentication mechanisms in cognitive radio networks. Clarify the security aspects and proofs for the proposed model against layered well-known attacks.

II. CRYPTOGRAPHIC HASH FUNCTIONS

Cryptographic Hash Function is essentially many-to-one function since it maps variable input length message into a fixed size random output called hash digest or hash value as in (1) where m is variable input in bits and n is the fixed output of hash function in bits and H is the hash function [3,4].

$$H : \{0,1\}^m \longrightarrow \{0,1\}^n \quad , m > n \quad (1)$$

The kind of hash function needed in security applications is called cryptographic hash function [3] that mainly involve the iterative use of compression function used in mapping variable input to fixed output, cryptographic hash functions have indeed proved to be the workhorses of modern cryptography applications [5] they provide data integrity: any single or small change to the data will result a different hash digest so they are often used to determine whether or not data has changed. This property is useful in the generation and verification of DSS and message authentication codes (MAC), and in the generation of random numbers or bits.

Cryptographic hash functions have basic security requirements in order to be used in cryptographic applications which are: collision resistance, pre-image resistance and 2nd pre-image resistance [4,5], the security requirements of cryptographic hash functions can be outlined as follow:

- *Collision resistance:* is a very important property for cryptographic hash function, for collision resistant hash function its computationally infeasible, to find two different arbitrary messages M and M' where $(M \neq M')$ with same hash value $H(M) = H(M')$. Mathematically the probability of finding a collision in hash function from an advantage of an adversary A is expressed in (2)

$$\boldsymbol{Adv}_H^{cr}(A) = Pr\begin{bmatrix} (M, M') \leftarrow A \\ : M \neq M' \wedge H(M) = H(M') \end{bmatrix} \quad (2)$$

- *Pre-image resistance:* the 2nd important property of cryptographic function, it must be a one way function (non-invertible), for a message M given a hashed value $H(M)$; it is computationally infeasible to retrieve the original message from the hashed one. Or generate any message $M' \neq M$ such that $H(M') = H(M)$ Formally the probability of finding a pre-image resistance in hash function from an advantage of an adversary A is defined in (3).

$$\boldsymbol{Adv}_H^{pre[m]}(A) = Pr\begin{bmatrix} M \leftarrow \{0,1\}^m; Y \leftarrow H(M); M' \leftarrow A(Y) \\ : H(M') = Y \end{bmatrix} \quad (3)$$

- *2nd pre-image resistance:* guarantees that it is impossible to find an alternative message M' with the same hash value $[H(M) = H(M')]$ as the given arbitrary message M. Succinctly in (4)

$$\boldsymbol{Adv}_H^{pre[m]}(A) = Pr\begin{bmatrix} M \leftarrow \{0,1\}^m \; ; \; M' \leftarrow A(M) \\ : M \neq M' \wedge H(M) = H(M') \end{bmatrix} \quad (4)$$

III. NEW CUSTOMIZED HASH FUNCTION DESIGN

Hash functions can be used in many applications such as message authentication, DSS, constructing pseudorandom functions or a pseudorandom number generator and many other applications, mainly hash functions can be classified into keyed or keyless hash functions; keyed hash functions accept variable length message and produce fixed output as message digest algorithms (MD4, MD5), Secure hash algorithms (SHA) families, keyed hash functions accept variable length message and fixed size key to produce a fixed length output as message MAC[5].

The new customized hash function produces a fixed length output hashed value 288 bits, the proposed algorithm construction based on iterative (cascaded) construction, in addition it's a keyless hash algorithm to avoid algorithm complexity, and long elapsed running time in CRNs application, in general the proposed hash function has two stages: the pre-processing phase and hash value computation phase; the pre-processing phase includes message padding, dividing the padded message into 512 bits-blocks and setting initial values (vectors) to be used in hash computation phase, on the other hand the hash computation phase includes message scheduling, round functions, word operations and constants to iteratively produce the final hash value (288-bits).

A. Pre-processing phase design

- *Padding the message:* the first stage before hash computation, the padded message in the proposed hash function is ensured to be multiple of 512-bit blocks according to (5), where L is the message length, z is the smallest, non-negative solution (zero bits for padding) for (5) and the number 1 (bit 1) is appended to the message and then followed by zero bits [6].

$$L + z + 1 = 448 \; mod \; 512 \quad (5)$$

- *Dividing message into N-512 bits block:* each 512-bits block is input to the compression function and represented as:

  16 * (32-bit word) : $M_1^{(i)}, M_2^{(i)}, \dots \dots \dots, M_{15}^{(i)}$.

- *Initial digest vector H_0 (288-bits):* the initial hash value or so-called initial chaining variable is also an input to the compression function with each of 512-bit block, the initial hash value is set in the proposed model as the 2nd 32-bits of fractional part of square root of first 9 prime numbers.

B. Compression function and hash value computation phase

The compression function is the core function to produce the iterative hash value until the final hash value evaluated, the number of compression functions is determined depending on the message size that required to be hashed [6,7], the construction of a single compression function is shown in Fig. (1) and associated with Fig. (2), which are the main inputs to the compression function H_i (288 bits) and M_i (512-bit block). The 288-bit iterative hash value H_i is subdivided into 9 registers (from a to i), each register holds 32-bits, in the proposed model, initially the output of the 9 registers are directed to permutation

layer (P-table) in Fig.(3), the construction of (P-table) can be customized to be set the circular left rotation (CLR) by any co-prime number (C_P) for each single register 32 bits, the algorithm is tested at C_P =3.

The output of 32-bit registers are connected as an input to round function, with round function constants which are set in the proposed algorithm as the 2nd 32-bits of fractional part of cubic root for the first (64) prime numbers, and the third input to round function is the 32-bit word derived from the current 512-bit input block (W_t), expressed mathematically in (6).

$$W_t = \begin{cases} M_t^{[i]} & ,0 \le t \le 15 \\ \sigma_1^{\{288\}}(W_{t-2}) + W_{t-7} + \sigma_0^{\{288\}}(W_{t-15}) + W_{t-16} & ,16 \le t \le 63 \end{cases} \quad (6)$$

The single round function contains logic operations and bit rotation functions as shown in Fig. (4) for the 9 registers, and expressed mathematically in (7) to (12), of total 64 rounds.

The $RR_{[j]}(x)$ = circular right shift of the 32-bit argument (x) by j bits. $SR_{[j]}(x)$ = right shift of the 32-bit argument (x) by j bits with padding zeroes to the left. $\oplus$ = Bitwise XOR ("exclusive-OR") operation, $+$ = addition modulo 2^{32} and $\wedge$=Bitwise AND operation.

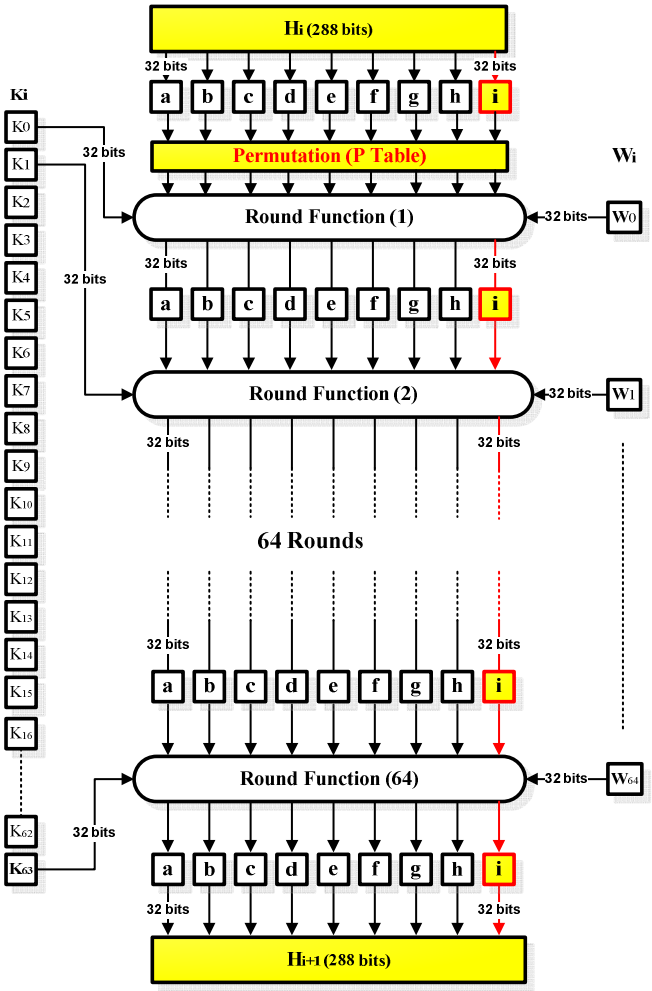

Fig. 1 Compression function (operations on H_i)

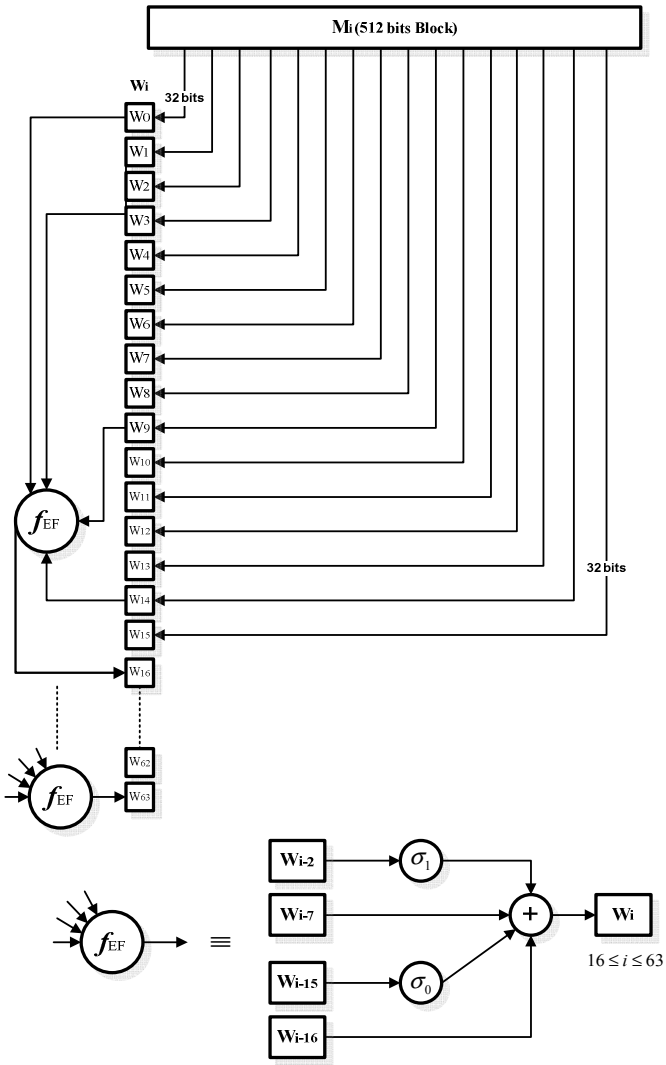

Fig. 2 Compression function (operations on M_i)

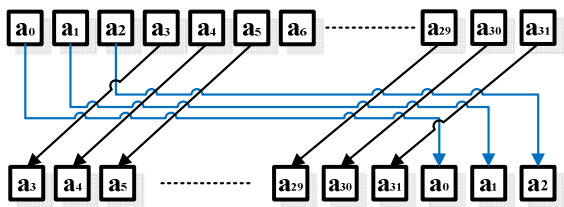

Fig. 3 Permutation Layer (P-Table) for single register

$$c(x,y,z) = (x \wedge y) \oplus (\bar{x} \wedge z) \quad (7)$$

$$g(x,y,z) = (x \wedge y) \oplus (x \wedge z) \oplus (y \wedge z) \quad (8)$$

$$\Sigma_0^{\{288\}}(x) = RR_{[2]}(x) \oplus RR_{[13]}(x) \oplus RR_{[22]}(x) \quad (9)$$

$$\Sigma_1^{\{288\}}(x) = RR_{[6]}(x) \oplus RR_{[11]}(x) \oplus RR_{[25]}(x) \quad (10)$$

$$\sigma_0^{\{288\}}(x) = RR_{[7]}(x) \oplus RR_{[18]}(x) \oplus SR_{[3]}(x) \quad (11)$$

$$\sigma_1^{\{288\}}(x) = RR_{[17]}(x) \oplus RR_{[19]}(x) \oplus SR_{[10]}(x) \quad (12)$$

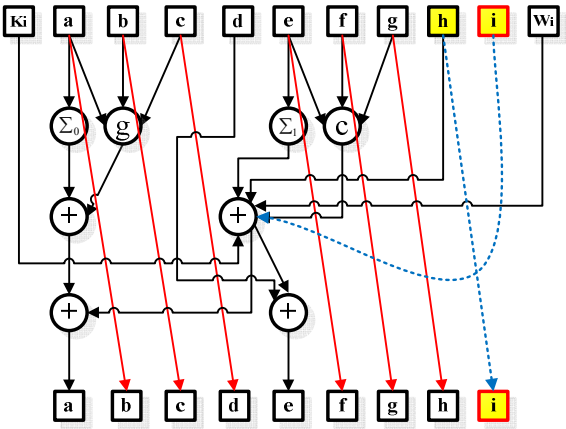

Fig. 4 Single round function operations

IV. Testing The Proposed Hash Function

After presenting the new customized hash function design in the previous section, some statistical and hash test are performed to compare the proposed hash function with the standard hash functions. All the tests are preformed using GNU-GCC C++ compiler on Linux Ubuntu machine, that run on 2.3 GHz, intel core i7, 64-bit machine, the performed tests are: elapsed processing running test, avalanche effect test and probability of collision test. The statistical tests are then compared with standard hash functions; Secure hash algorithm (SHA) family. The graphs and results are plotted using gnu-plot, a portable command-line driven graphing utility for Linux.

A. Elapsed Processing Running Time Test

Elapsed running time considered as a very important parameter for hash functions testing to calculate how much time needed to evaluate hash values, the proposed model is tested on 1000 sample file, with various size and different formats (strings, .txt files, .docx files, image files and video files) up to 1000kBytes file size, and then compared to standard hash algorithms: SHA-2 (SHA 256, SHA 512), and SHA-3 Keccak (SHA 256,SHA 512), as noticed from results in Fig. (5), the elapsed processing time for hash computation increased gradually with the hash value output. Also the proposed hash is faster than the corresponding standard hash functions. Table I, summarizes a comparison between the proposed hash algorithm and standard hash algorithms in terms of the average processing time in milli-seconds (ms), the hash performance for 1 Mega-Byte (MB), file size, the performance is very important parameter to test hash functions and its units in cycles per byte (cpb).

B. Avalanche Effect Test

Avalanche effect is very desirable property for cryptographic hash functions, mainly it results in substantially different hash values when a small difference or a even a single bit changed for the input message to be hashed; if the input message changed slightly the output changed significantly (50% of the output hashed values will be flipped)[4], this test performed to the proposed hash function and standard hash function algorithms SHA-2 (SHA 256), and SHA-3 Keccak (SHA 256), in Fig.6, as noticed the average avalanche effect percentage is larger than the standard ones, which means that the new customized hash function has better avalanche effect.

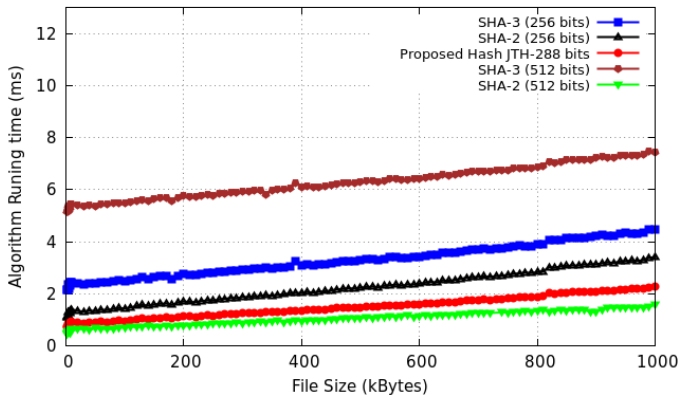

Fig. 5 Elapsed running time test

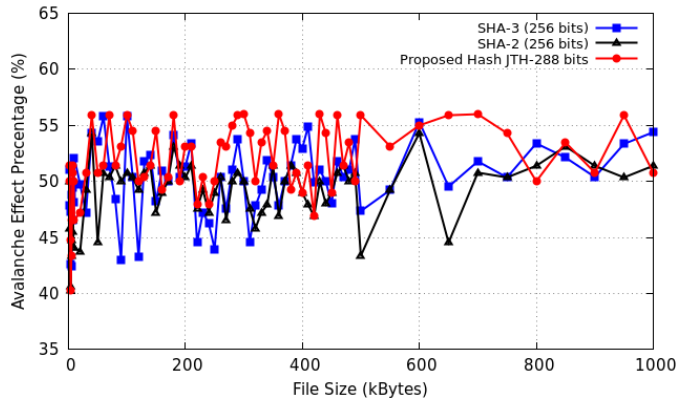

Fig. 6 Avalanche Effect test

C. Probability of Hash Collision Test

Collision resistance is a very important security requirement for any cryptographic hash function, accordingly it is important to find the probability of hash collision (two different messages have the same hash values), the probability of hash collision test for the proposed hash function is based on the birthday paradox theory mentioned in [3], the test is performed on proposed hash and standard hash algorithms: : SHA-2 (SHA 256, SHA 512), and SHA-3 Keccak (SHA 256, SHA 512), as shown in Fig.(7,8,9), from the results shown the probability of finding hash collision in the proposed hash function with 50% percentage of occurrence is obtained when number of hashes are $5 * 10^{44}$ hashes generated which considered as a very huge number of attempts to find a single hash collision, compared to SHA-2(256) and SHA-3(256) $\approx 10^{38}$ hashes, concluding that the proposed function has very high collision resistance.

D. Proposed Hash Function Features

The new customized proposed hash function has several features and characteristics that can be summarized as follows: Large Algorithm Diversity. Compatibility for 32-bit and 64-bit systems. Larger Hash value 288 bits compared to standard hash algorithms: SHA-2 (SHA 256), and SHA-3 Keccak (SHA 256). Can be customized depending on application used. Fast hash function output in terms of elapsed and processing running time. Better Avalanche effect results compared to standard hash algorithms: SHA-2, and SHA-3. High collision resistance; probability of hash collision is very low at large number of

generated hashes (10^{44} hashes). Can be used with public key cryptography algorithms to provide data authentication and integrity. Tested with RSA public key Algorithm 2048bit, applied and simulated on CRNs.

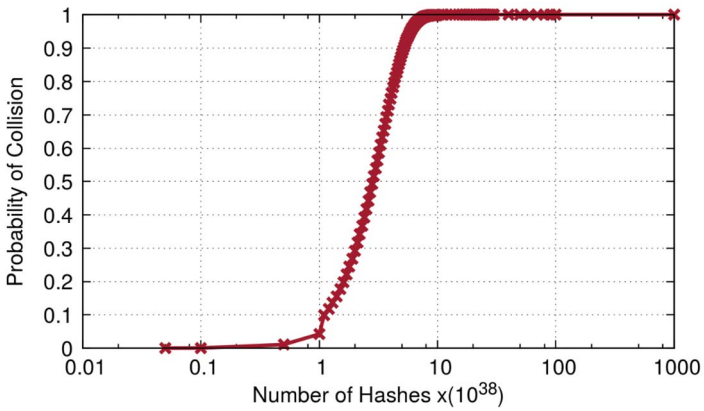

Fig. 7 Probability of hash collision in the standard SHA-2 (SHA 256), and SHA-3 Keccak (SHA 256)

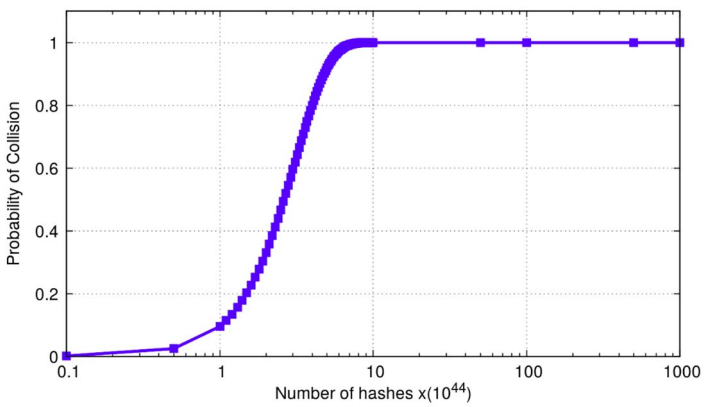

Fig. 8 Probability of hash collision in the proposed hash function

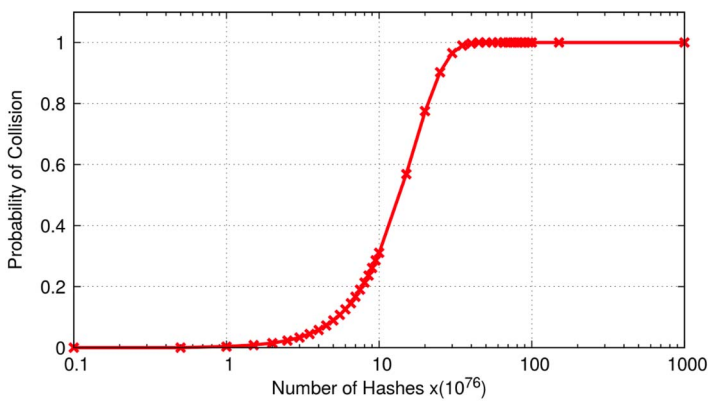

Fig. 9 Probability of hash collision in standard SHA-2 (SHA 512), and SHA-3 Keccak (SHA 512)

TABLE I. PERFORMANCE TESTS FOR STANDARD AND PROPOSED MODEL

Hash Family	**SHA-2**		**Proposed Hash**	**SHA-3 (Keccak)**	
Hash Type	256	512	JTH-288	256	512
Output (bits)	256	512	288	256	512
Word Size (bits)	32	64	32	32	64
Average Processing Time (ms)	3.8	1.5	1.8	4.15	7.02
Hash Performance (cpb), for 1MB file	7.9	3.94	4.38	9.21	16.45
Steps to find Hash Collision	10^(39)	10^(76)	10^(45)	10^(39)	10^(76)
Average Processing Time with DSS RSA-2048 (ms)	5.161	2.86	3.15	5.56	8.46
Average Signing hash Time (ms)	5.12	2.8	3.102	5.4	8.4
Average Verification Time (ms)	3.81	1.54	1.801	4.2	7.06
Modified DSS Performance (cpb) for 1MB file	11.32	6.27	6.9	12.195	18.55

V. DIGITAL SIGNATURE AND AUTHENTICATION MECHANISMS IN COGNITIVE RADIO NETWORKS

Opportunistic access in CRNs, could be exploited by malicious SUs to gain the spectrum access in a selfish manner by manipulating, the spectrum sensing information (SSI), and cause interference to licensed PUs [11,12].

In this paper, the proposed hash function is used with RSA-DSS and authentication mechanisms, to provide the security requirements for CRNs, the proposed work, is simulated, modeled and designed using OMNeT++ (Objective Modular Network Testbed in C++) with INET model suite (An open-source OMNeT++ model suite for wired, wireless and mobile networks). Fig10, shows CRN architecture that contains a primary and secondary networks, built and designed using OMNeT++ and INET frame work [15].

A. Cognitive radio network architecture

The CRNs architecture as shown in Fig.10 can be classified into two main networks, the primary network which contains PUs, that have the access for a certain band, the other network called cognitive network which have the SUs, that do not have the right to access the spectrum [9,10]. The elements of each network include:

- *Primary User (PU):* has the legitimate access for the spectrum and can access the channel at any time.
- *Primary user base station (PU-BS):* does not have advanced CR capabilities, manage the licensed spectrum for PUs usage [13].
- *Cognitive radio user / Secondary user (SU):* has all CR capabilities, including the main functions of CR cycle, called the unlicensed user has no license to access the spectrum
- *Cognitive radio base station / secondary user base station (SU-BS):* provides and controls the communications between CR users, can receive the SSI from s single CR user (local spectrum sensing) or from many CR users (cooperative spectrum sensing), which provide an accurate information

about the spectrum usage status more than local spectrum sensing results.

- *TTP (Third Trust Party):* provide nodes with private and public key, generate key pairs, using RSA public key cryptography algorithm, it acts as a public key authority that can provide users with public keys to any node, whom would like to communicate with and verify digital signature with other nodes public key [14].

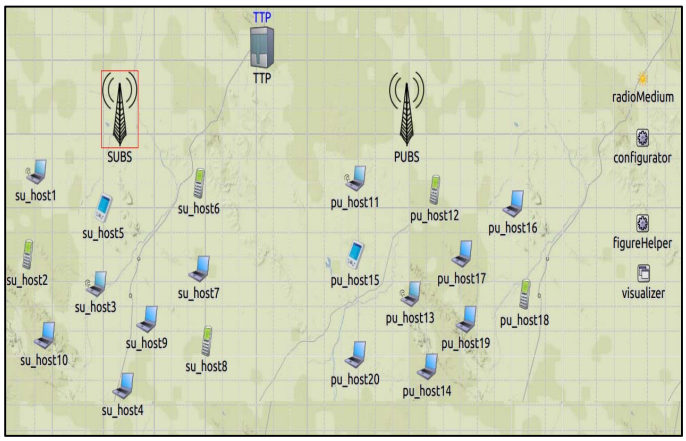

Fig. 10 Simulation cognitive radio network model using OMNET++

B. *RSA digital signature Scheme with proposed hash*

RSA-DSS, is used with the new customized hash function, and applied in CRNs model, mainly the RSA digital signature assures: data authentication, integrity, and non-repudiation, by applying the sender private key (**Pr**) to the hashed message (either a normal request or SSI). The data hashed, by the proposed hash function then appended to the original message to produce a digitally signed message that sent over the network, at the other side, the receiver verify the digitally signed message using the sender public key (**Pu**) to decrypt the encrypted hash value and then apply the proposed hash function to the original message, the receiver then compare the two hash values, the digital signature is valid and message verified and accepted if the two hash values are equal. Table I, shows the average processing time for RSA-DSS, 2048 bits, tested and compared with the proposed and standards hash algorithms, the results show, the RSA-DSS, 2048 bits, with the proposed hash is faster than SHA-2 (256), SHA-3 (256, 512). In addition to the signing and the verification, processing time.

C. *Authentication proceduers and digital signature in CRNs*

In the proposed network, the TTP uses RSA public key cryptosystem to generate asymmetric key pairs $(\mathbf{Pr}_{TTP}, \mathbf{Pu}_{TTP})$. In the proposed model, the TTP sends the corresponding key-pairs to PUj-BS, SUi-BS and SUs, with its identification (ID), then each node decrypts this message by TTP's public key, steps (1, 2 and 3). Table II, explain the procedures. In step (4), the SU signs a request by its private key $\boldsymbol{S}_{\mathbf{PR}_{Su}}[\mathbf{Req.}:\{\mathbf{Pu}_{SuBs}\} \parallel \mathbf{ID}_{Su} \parallel \boldsymbol{r}_{Su}])$. SU, wants to communicate with (SUi-BS) to send the SSI to (SUi-BS). Therefore, it send a request to TTP for (SUi-BS) public key $\mathbf{Pu}_{SuBs}$, also it generate a random number r_{su} or time stamp to prove the uniqueness of the message sent, in step (5), a replay from TTP encrypted by TTP's private key is sent to SU, then the SU, decrypts the reply to get the (SUi-BS) public key and identify itself to (SUi-BS), step (6), the same procedure for authentication done by (SUi-BS), as in step (7) to (9) , in step (9), the SU signs and sends the SSI to (SUi-BS), by its private key and then, the (SUi-BS) request other SSI from other SUs; in secondary network, in step (10), after collecting the SSI, the (SUi-BS), then sends to (PUi-BS), a request to use the spectrum portion available in the primary network and not used by primary users, by the same authentication manner (step 11 to 14). Finally, the (SUi-BS) manages the spectrum, by allowing the SUs to use the spectrum without causing degradation in quality of service (QOS) requirement of SUs.

TABLE II. AUTHENTICATION MECHANISMS IN CRNS

Authentication Procedures
(1): $\boldsymbol{E}(\mathbf{Pr}_{TTP}, [\mathbf{Pu}_{TTP} \parallel \mathbf{Pr}_{SuBs} \parallel \mathbf{Pu}_{SuBs} \parallel \mathbf{ID}_{TTP}])$
(2): $\boldsymbol{E}(\mathbf{Pr}_{TTP}, [\mathbf{Pu}_{TTP} \parallel \mathbf{Pr}_{Su} \parallel \mathbf{Pu}_{Su} \parallel \mathbf{ID}_{TTP}])$
(3): $\boldsymbol{E}(\mathbf{Pr}_{TTP}, [\mathbf{Pu}_{TTP} \parallel \mathbf{Pr}_{PuBs} \parallel \mathbf{Pu}_{PuBs} \parallel \mathbf{ID}_{TTP}])$
(4): $\boldsymbol{S}_{\mathbf{PR}_{Su}}[\mathbf{Req.}:\{\mathbf{Pu}_{SuBs}\} \parallel \mathbf{ID}_{Su} \parallel \boldsymbol{r}_{Su}])$
(5): $\boldsymbol{E}(\mathbf{Pr}_{TTP}, [\mathbf{Pu}_{SuBs} \parallel \mathbf{Req.} \parallel \mathbf{ID}_{Su} \parallel \mathbf{ID}_{TTP} \parallel \boldsymbol{r}_{Su} \parallel \boldsymbol{r}_{TTP}])$
(6): $\boldsymbol{E}(\mathbf{Pu}_{Subs}, [\mathbf{ID}_{Su} \parallel \boldsymbol{r}_{Su}])$
(7): $\boldsymbol{S}_{\mathbf{PR}_{Subs}}[\mathbf{Req.}:\{\mathbf{Pu}_{Su}\} \parallel \mathbf{ID}_{Subs} \parallel \boldsymbol{r}_{Subs}])$
(8): $\boldsymbol{E}(\mathbf{Pr}_{TTP}, [\mathbf{Pu}_{Su} \parallel \mathbf{Req.} \parallel \mathbf{ID}_{Subs} \parallel \mathbf{ID}_{TTP} \parallel \boldsymbol{r}_{Subs} \parallel \boldsymbol{r}_{TTP}])$
(9): $\boldsymbol{S}_{\mathbf{PR}_{Su}}[\mathbf{Req.}:\{\mathbf{Spect.}\} \parallel \mathbf{ID}_{Su} \parallel \mathbf{Sensing}_{\cdot info} \parallel \boldsymbol{r}_{Su}])$
(10): $[\mathbf{Req.}:\{\mathbf{Sensing}_{info}\ from\ all\ SUs\} \parallel \mathbf{ID}_{PuBs}]$
(11): $\boldsymbol{S}_{\mathbf{PR}_{SuBs}}[\mathbf{Req.}:\{\mathbf{Spect.}\} \parallel \mathbf{ID}_{SuBs} \parallel \mathbf{Sensing}_{\cdot info} \parallel \boldsymbol{r}_{Subs}])$
(12): $\boldsymbol{S}_{\mathbf{PR}_{PuBs}}[\mathbf{Req.}:\{\mathbf{Pu}_{SuBs}\} \parallel \mathbf{ID}_{PuBs} \parallel \boldsymbol{r}_{PuBs}])$
(13): $\boldsymbol{E}(\mathbf{Pr}_{TTP}, [\mathbf{Pu}_{SuBs} \parallel \mathbf{Req.} \parallel \mathbf{ID}_{PuBs} \parallel \mathbf{ID}_{TTP} \parallel \boldsymbol{r}_{PuBs} \parallel \boldsymbol{r}_{TTP}])$
(14): $\boldsymbol{S}_{\mathbf{PR}_{PuBs}}[\mathbf{ACK\ Reply}:\{\mathbf{Spect.\ Avail.}\} \parallel \mathbf{ID}_{PuBs} \parallel \boldsymbol{r}_{PuBs}])$
(15): $\boldsymbol{S}_{\mathbf{PR}_{SuBs}}[\mathbf{Reply}:\{\mathbf{Use\ Spect.}\} \parallel \mathbf{ID}_{SuBs} \parallel \boldsymbol{r}_{SuBs}])$

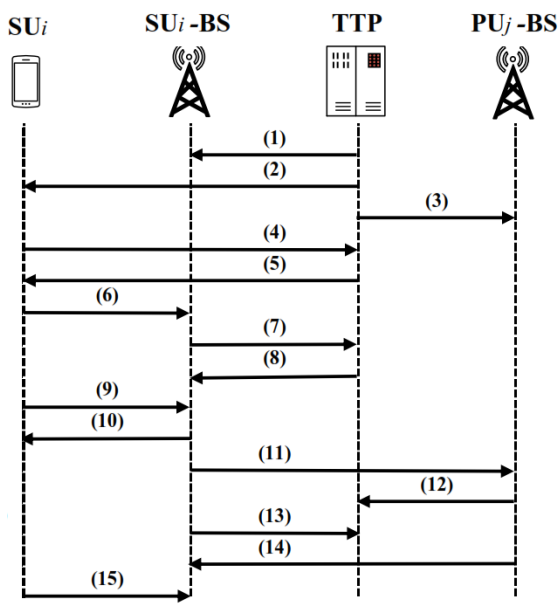

Fig. 11 Digital signature and authentication procedures used in proposed cognitive radio network model

VI. CONCLUSION

CRNs are the key technology in solving spectrum scarcity and underutilization problem, however, this type of networks are exposed to various security attacks, This paper, introduced a proposed authentication mechanisms for CRNs, based on a new customized iterated, multi-round, keyless hash function, that produces a fixed output size of 288 bits, the proposed hash function performance is compared with well-known standard hash algorithms: SHA-2 (SHA-256, SHA-512) and SHA-3 Keccak (SHA3-256 and SHA3-512), results showed that the proposed hash is faster in processing time, have high collision resistance, and better avalanche effect results. Accordingly, the proposed hash function is tested with RSA public key algorithm to provide modified DSS, that implemented and simulated on CRNs, using OMNeT++ simulator, also the paper, compares the usage of proposed hash and standard hashes with the DSS, results also showed that, the proposed work has better performance and processing levels. The proposed secure CRN framework, provides the main security requirements; such as: authenticity, integrity, network access control, non-repudiation and network availability. In addition to providing security for the spectrum sensing information from forging or manipulations from malicious users.

REFERENCES

[1] John D. Matyjas, Sunil Kumar, Fei Hu, "Spectrum sharing in wireless networks : Fairness, efficiency and security" CRC Press. 2016

[2] Maria-Gabriella, Di Benedetto, Andrea F. Cattoni, Jocelyn Fiorina, Faouzi Bader, Luca De Nardis "Cognitive Radio and Networking for Heterogeneous wireless networks., Springer, 2016

[3] William Stallings, " Cryptography and network security : Principles and practice" 6th Ed., PEARSON, 2014.

[4] Bruce Schneier, " Applied Cryptograpghy: protocols, Algorithms, and Source code in C " 2nd Edition, John Wiley & Sons. 1996.

[5] Saif Al-Kuwari, James Davenport, and Russell Bradford. Cryptographic Hash Functions: Recent Design Trends and Security Notions. In Short Paper Proceedings of Inscrypt '10, pages 133–150. Science Press of China, 2010.

[6] NIST. "Secure Hash Standard (SHS)", 2015. (FIPS PUB 180-4).

[7] NIST. "Recommendation for applications using approved hash algorithm", 2012. (FIPS Special PUB 800-107).

[8] S. Haykin, "Cognitive radio: brain-empowered wireless communications," IEEE Journal on Selected Areas in Communications, vol. 23, no. 2, pp. 201–220, 2005.

[9] G. Hattab and M. Ibnkahla, Multiband spectrum access: Great promises for future cognitive radio networks, Proceedings of the IEEE, 102 (3), 282–306, March 2014.

[10] Dominique Noguet, Klaus Moessner, Jacques Palicot,"Cognitive radio oriented wireless networks.", Springer., 2016.

[11] Suchismita Bhattacharjee, Roshni Rajkumari and Ningrinla Marchang "Cognitive Radio Networks Security Threats and Attacks: A Review." IJCA Proceedings on International Conference on Information and Communication Technologies ICICT(2):16-19, October 2014.

[12] Li Jianwu, Feng Zebing, Feng Zhiyong, Zhang Ping, "A Survey of Security Issues in Cognitive Radio Networks" , SECURITY SCHEMES AND SOLUTIONS, China Communication (Volume 12, Issue 3),. March 2015.

[13] NingZhang and JonW.Mark, "Security-aware Cooperation in Cognitive Radio Networks", Springer., 2014.

[14] D. Hlavacek, J.M. Chang, "A layered approach to cognitive radio network security: A survey" ,Survey Paper, Computer Networks, Elsevier Journal, 2014.

[15] Thomas Chamberlain "Learning OMNeT++", PACKT., 2013

View publication stats