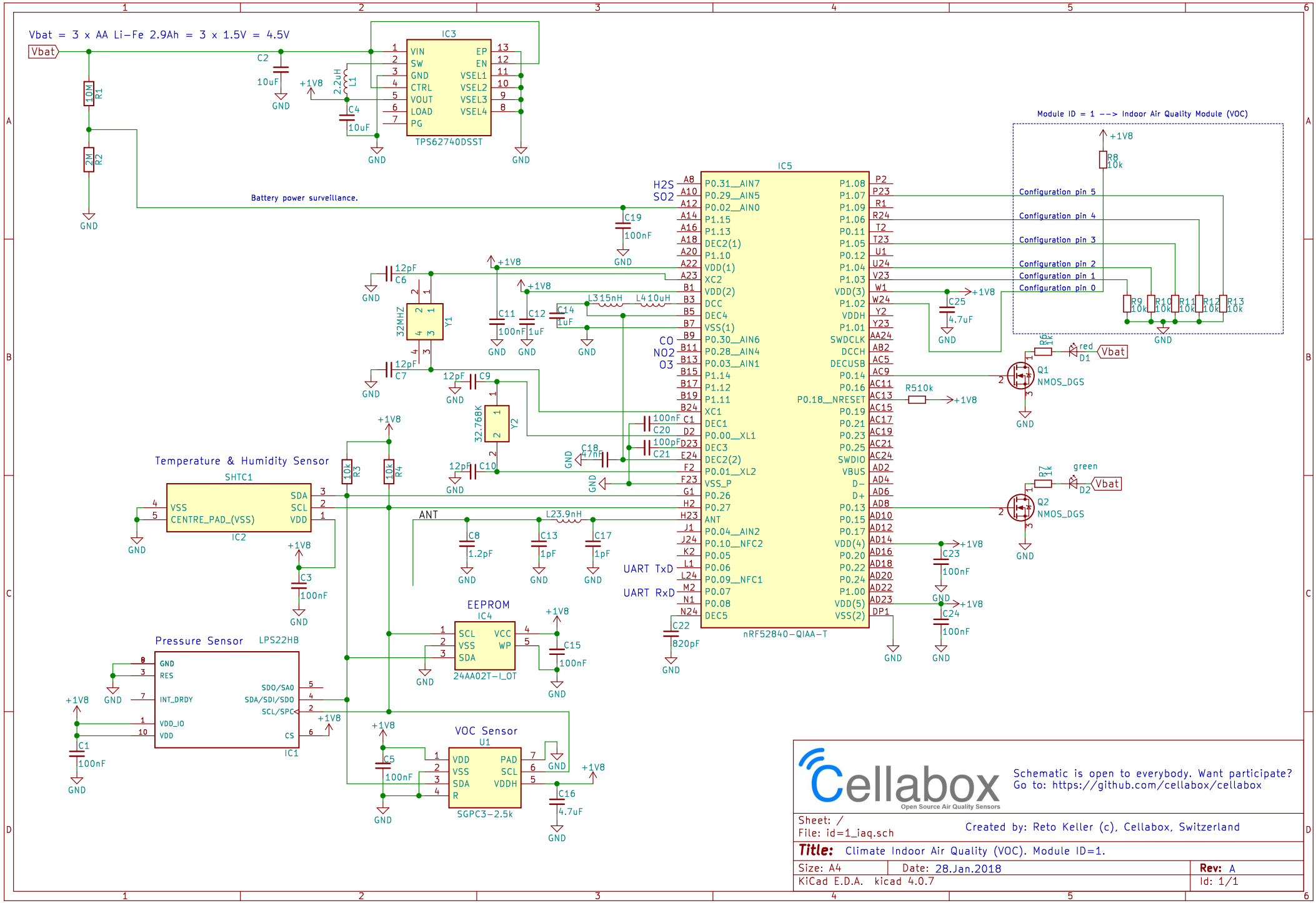
Vbat = 3 x AA Li-Fe 2.9Ah = 3 x 1.5V = 4.5V
Vbat
R1 10M
R2 2M
Battery power surveillance.
IC3
TPS62740DSST
VIN
SW
GND
CTRL
VOUT
LOAD
PG
EP
EN
VSEL1
VSEL2
VSEL3
VSEL4
C2 10uF
L1 2.2uH
C4 10uF
+1V8
GND
IC5
nRF52840-QIAA-T
H2S
SO2
CO
NO2
O3
UART TxD
UART RxD
ANT
Module ID = 1 --> Indoor Air Quality Module (VOC)
Configuration pin 5
Configuration pin 4
Configuration pin 3
Configuration pin 2
Configuration pin 1
Configuration pin 0
R8 10k
R9 10k
R10 10k
R11 10k
R12 10k
R13 10k
C19 100nF
C25 4.7uF
R6 1k
red
D1
Q1
NMOS_DGS
R510k
R7 1k
green
D2
Q2
NMOS_DGS
C23 100nF
C24 100nF
C6 12pF
C7 12pF
Y1 32MHZ
C11 100nF
C12 1uF
C14 1uF
L315nH
L410uH
C9 12pF
C10 12pF
Y2 32.768K
C20 100nF
C21 100pF
C18 47nF
R3 10k
R4 10k
Temperature & Humidity Sensor
SHTC1
IC2
VSS
CENTRE_PAD_(VSS)
SDA
SCL
VDD
C3 100nF
C8 1.2pF
C13 1pF
C17 1pF
L23.9nH
EEPROM
IC4
24AA02T-I_OT
SCL
VSS
SDA
VCC
WP
C15 100nF
Pressure Sensor
LPS22HB
IC1
GND
RES
INT_DRDY
VDD_IO
VDD
SDO/SA0
SDA/SDI/SDO
SCL/SPC
CS
C1 100nF
VOC Sensor
U1
SGPC3-2.5k
VDD
VSS
SDA
R
PAD
SCL
VDDH
C5 100nF
C16 4.7uF
C22 820pF
Cellabox
Open Source Air Quality Sensors
Schematic is open to everybody. Want participate?
Go to: https://github.com/cellabox/cellabox
Sheet: /
File: id=1_iaq.sch
Created by: Reto Keller (c), Cellabox, Switzerland
Title: Climate Indoor Air Quality (VOC). Module ID=1.
Size: A4
Date: 28.Jan.2018
Rev: A
KiCad E.D.A. kicad 4.0.7
Id: 1/1