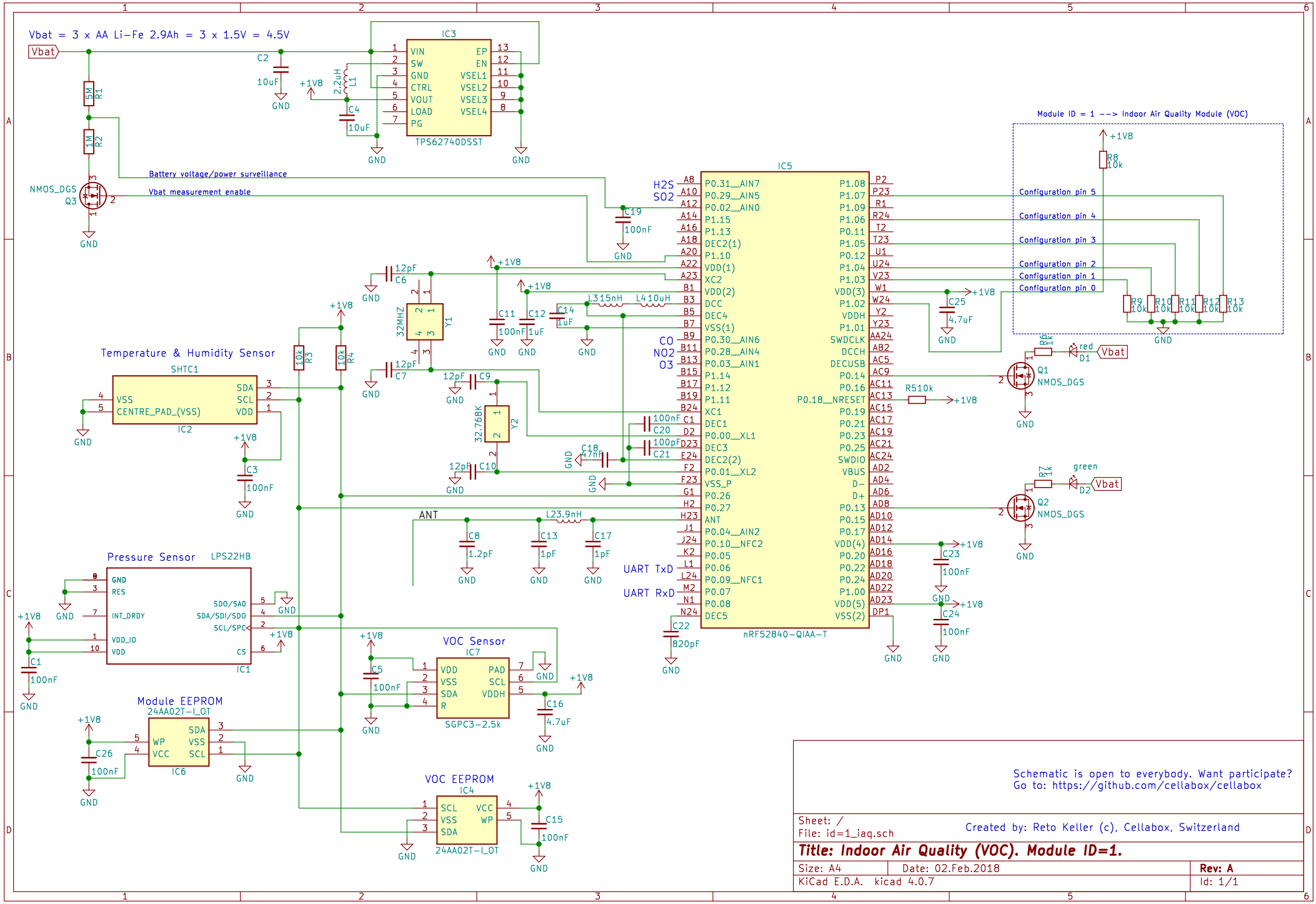
Vbat = 3 x AA Li-Fe 2.9Ah = 3 x 1.5V = 4.5V
Vbat
IC3
TPS62740DSST
VIN
SW
GND
CTRL
VOUT
LOAD
PG
EP
EN
VSEL1
VSEL2
VSEL3
VSEL4
C2
10uF
L1
2.2uH
C4
10uF
+1V8
R1
5M
R2
1M
NMOS_DGS
Q3
Battery voltage/power surveillance
Vbat measurement enable
IC5
nRF52840-QIAA-T
H2S
SO2
CO
NO2
O3
UART TxD
UART RxD
ANT
P0.31__AIN7
P0.29__AIN5
P0.02__AIN0
P1.15
P1.13
DEC2(1)
P1.10
VDD(1)
XC2
VDD(2)
DCC
DEC4
VSS(1)
P0.30__AIN6
P0.28__AIN4
P0.03__AIN1
P1.14
P1.12
P1.11
XC1
DEC1
P0.00__XL1
DEC3
DEC2(2)
P0.01__XL2
VSS_P
P0.26
P0.27
P0.04__AIN2
P0.10__NFC2
P0.05
P0.06
P0.09__NFC1
P0.07
P0.08
DEC5
P1.08
P1.07
P1.09
P1.06
P0.11
P1.05
P0.12
P1.04
P1.03
VDD(3)
P1.02
VDDH
P1.01
SWDCLK
DCCH
DECUSB
P0.14
P0.16
P0.18__NRESET
P0.19
P0.21
P0.23
P0.25
SWDIO
VBUS
D-
D+
P0.13
P0.15
P0.17
VDD(4)
P0.20
P0.22
P0.24
P1.00
VDD(5)
VSS(2)
C19
100nF
C22
820pF
C25
4.7uF
C23
100nF
C24
100nF
R510k
Module ID = 1 --> Indoor Air Quality Module (VOC)
Configuration pin 5
Configuration pin 4
Configuration pin 3
Configuration pin 2
Configuration pin 1
Configuration pin 0
R8
10k
R9
10k
R10
10k
R11
10k
R12
10k
R13
10k
R6
1k
red
D1
Q1
NMOS_DGS
R7
1k
green
D2
Q2
NMOS_DGS
Temperature & Humidity Sensor
SHTC1
IC2
VSS
CENTRE_PAD_(VSS)
SDA
SCL
VDD
C3
100nF
R3
10k
R4
10k
32MHZ
Y1
C6
12pF
C7
12pF
C11
100nF
C12
1uF
C14
1uF
L315nH
L410uH
32.768K
Y2
C9
12pF
C10
12pF
C18
47nF
C20
100nF
C21
100pF
ANT
L23.9nH
C8
1.2pF
C13
1pF
C17
1pF
Pressure Sensor
LPS22HB
IC1
GND
RES
INT_DRDY
VDD_IO
VDD
SDO/SA0
SDA/SDI/SDO
SCL/SPC
CS
C1
100nF
VOC Sensor
IC7
SGPC3-2.5k
VDD
VSS
SDA
R
PAD
SCL
VDDH
C5
100nF
C16
4.7uF
Module EEPROM
24AA02T-I_OT
IC6
WP
VCC
SDA
VSS
SCL
C26
100nF
VOC EEPROM
IC4
24AA02T-I_OT
SCL
VSS
SDA
VCC
WP
C15
100nF
Schematic is open to everybody. Want participate?
Go to: https://github.com/cellabox/cellabox
Sheet: /
File: id=1_iaq.sch
Created by: Reto Keller (c), Cellabox, Switzerland
Title: Indoor Air Quality (VOC). Module ID=1.
Size: A4
Date: 02.Feb.2018
Rev: A
KiCad E.D.A. kicad 4.0.7
Id: 1/1