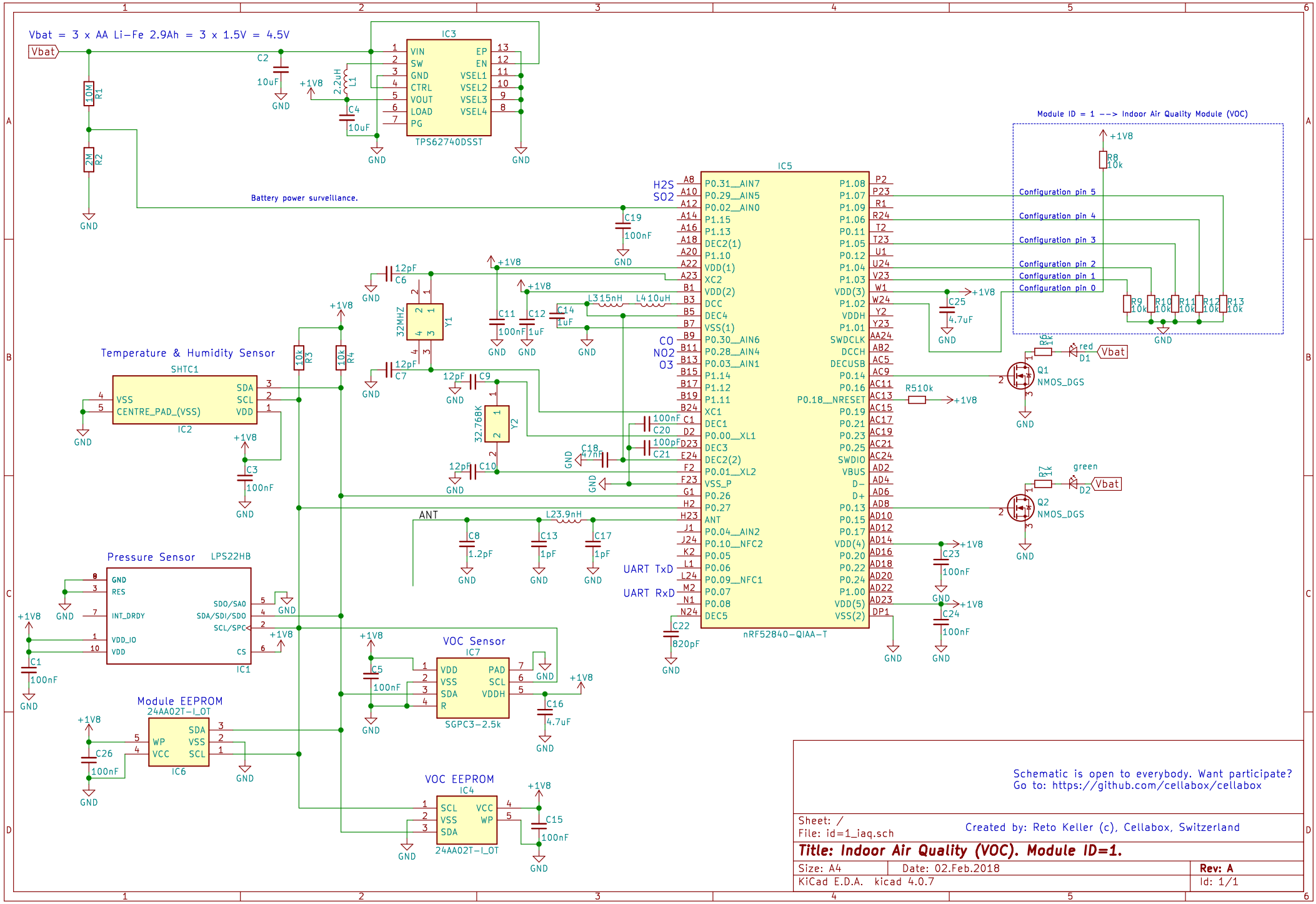
Vbat = 3 x AA Li-Fe 2.9Ah = 3 x 1.5V = 4.5V
Vbat
R1 10M
R2 2M
Battery power surveillance.
IC3
TPS62740DSST
VIN
SW
GND
CTRL
VOUT
LOAD
PG
EP
EN
VSEL1
VSEL2
VSEL3
VSEL4
C2 10uF
L1 2.2uH
C4 10uF
+1V8
GND
IC5
nRF52840-QIAA-T
P0.31__AIN7
P0.29__AIN5
P0.02__AIN0
P1.15
P1.13
DEC2(1)
P1.10
VDD(1)
XC2
VDD(2)
DCC
DEC4
VSS(1)
P0.30__AIN6
P0.28__AIN4
P0.03__AIN1
P1.14
P1.12
P1.11
XC1
DEC1
P0.00__XL1
DEC3
DEC2(2)
P0.01__XL2
VSS_P
P0.26
P0.27
ANT
P0.04__AIN2
P0.10__NFC2
P0.05
P0.06
P0.09__NFC1
P0.07
P0.08
DEC5
P1.08
P1.07
P1.09
P1.06
P0.11
P1.05
P0.12
P1.04
P1.03
VDD(3)
P1.02
VDDH
P1.01
SWDCLK
DCCH
DECUSB
P0.14
P0.16
P0.18__NRESET
P0.19
P0.21
P0.23
P0.25
SWDIO
VBUS
D-
D+
P0.13
P0.15
P0.17
VDD(4)
P0.20
P0.22
P0.24
P1.00
VDD(5)
VSS(2)
H2S
SO2
CO
NO2
O3
UART TxD
UART RxD
C19 100nF
C6 12pF
C7 12pF
Y1 32MHZ
C11 100nF
C12 1uF
C14 1uF
L315nH
L410uH
C25 4.7uF
Y2 32.768K
C9 12pF
C10 12pF
C20 100nF
C21 100pF
C18 47nF
C8 1.2pF
C13 1pF
C17 1pF
L23.9nH
C22 820pF
C23 100nF
C24 100nF
Module ID = 1 --> Indoor Air Quality Module (VOC)
R8 10k
Configuration pin 5
Configuration pin 4
Configuration pin 3
Configuration pin 2
Configuration pin 1
Configuration pin 0
R9 10k
R10 10k
R11 10k
R12 10k
R13 10k
R6 1k
red
D1
Q1 NMOS_DGS
R510k
R7 1k
green
D2
Q2 NMOS_DGS
Temperature & Humidity Sensor
SHTC1
IC2
VSS
CENTRE_PAD_(VSS)
SDA
SCL
VDD
R3 10k
R4 10k
C3 100nF
Pressure Sensor
LPS22HB
IC1
GND
RES
INT_DRDY
VDD_IO
VDD
SDO/SA0
SDA/SDI/SDO
SCL/SPC
CS
C1 100nF
VOC Sensor
IC7
SGPC3-2.5k
VDD
VSS
SDA
R
PAD
SCL
VDDH
C5 100nF
C16 4.7uF
Module EEPROM
24AA02T-I_OT
IC6
WP
VCC
SDA
VSS
SCL
C26 100nF
VOC EEPROM
IC4
24AA02T-I_OT
SCL
VSS
SDA
VCC
WP
C15 100nF
Schematic is open to everybody. Want participate?
Go to: https://github.com/cellabox/cellabox
Sheet: /
File: id=1_iaq.sch
Created by: Reto Keller (c), Cellabox, Switzerland
Title: Indoor Air Quality (VOC). Module ID=1.
Size: A4
Date: 02.Feb.2018
Rev: A
KiCad E.D.A. kicad 4.0.7
Id: 1/1