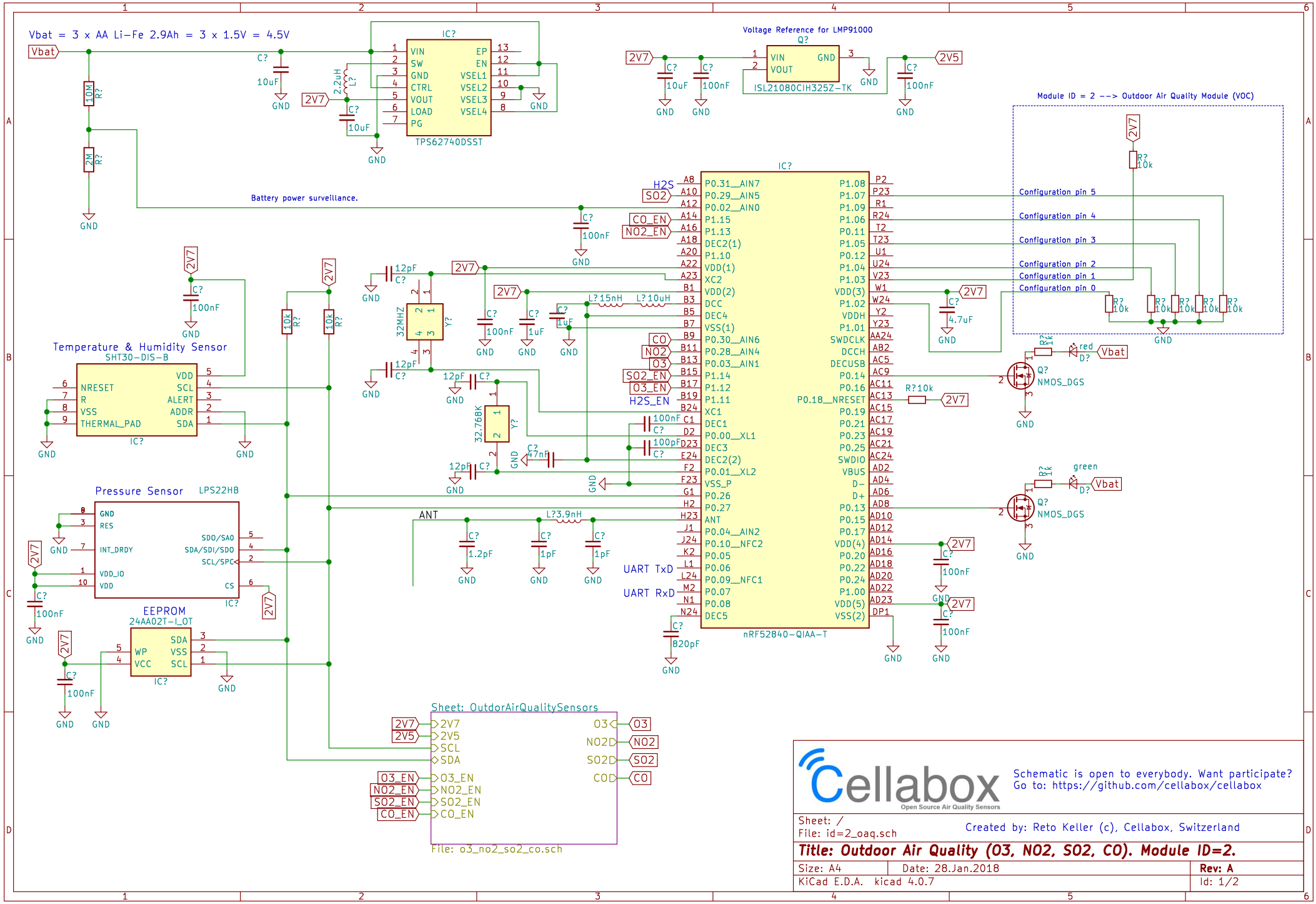
Vbat = 3 x AA Li-Fe 2.9Ah = 3 x 1.5V = 4.5V
Battery power surveillance.
TPS62740DSST
Voltage Reference for LMP91000
ISL21080CIH325Z-TK
Module ID = 2 --> Outdoor Air Quality Module (VOC)
Configuration pin 5
Configuration pin 4
Configuration pin 3
Configuration pin 2
Configuration pin 1
Configuration pin 0
nRF52840-QIAA-T
Temperature & Humidity Sensor
SHT30-DIS-B
Pressure Sensor
LPS22HB
EEPROM
24AA02T-I_OT
Sheet: OutdorAirQualitySensors
File: o3_no2_so2_co.sch
Cellabox
Open Source Air Quality Sensors
Schematic is open to everybody. Want participate?
Go to: https://github.com/cellabox/cellabox
Sheet: /
File: id=2_oaq.sch
Created by: Reto Keller (c), Cellabox, Switzerland
Title: Outdoor Air Quality (O3, NO2, SO2, CO). Module ID=2.
Size: A4
Date: 28.Jan.2018
Rev: A
KiCad E.D.A. kicad 4.0.7
Id: 1/2

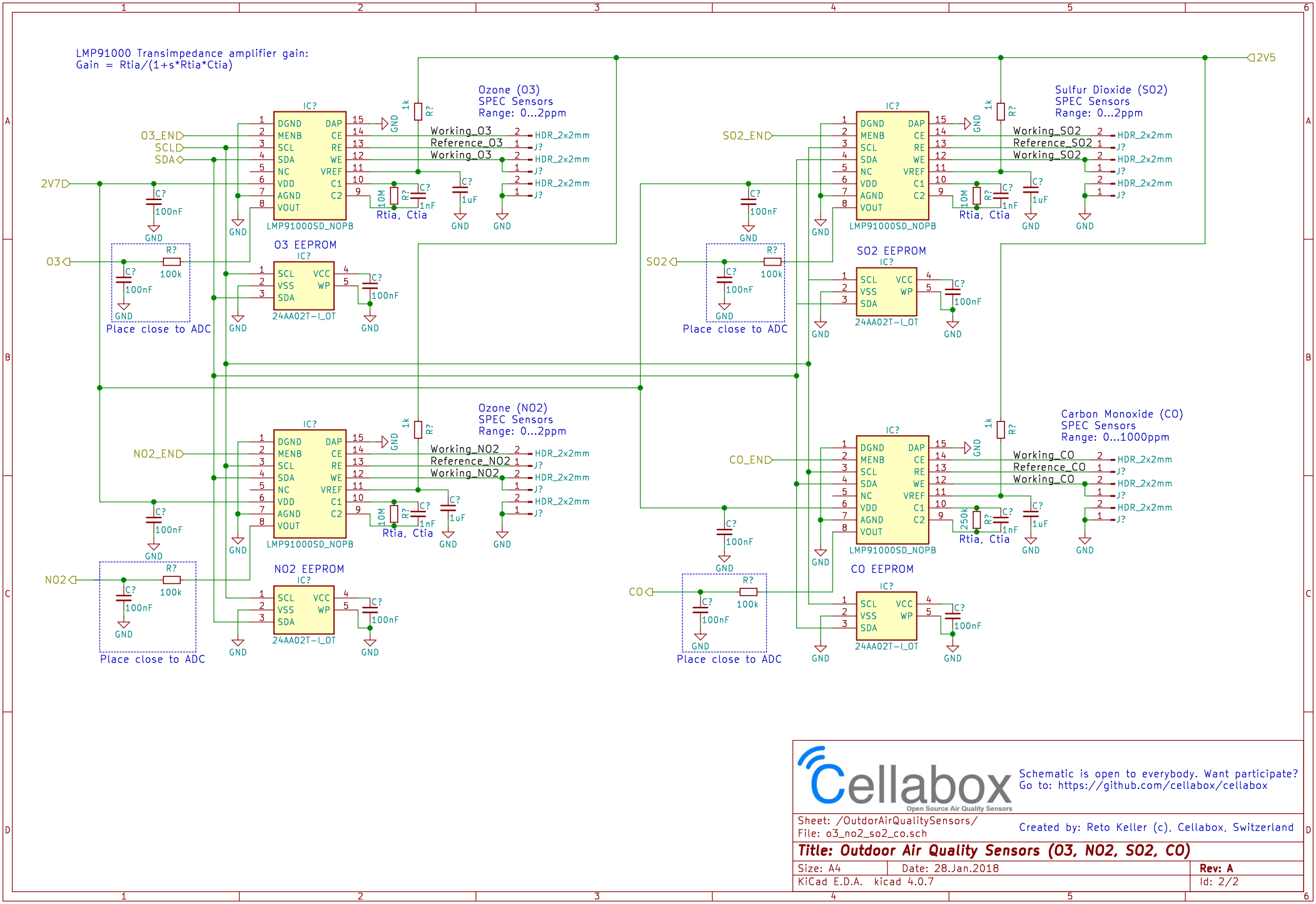

Cellabox
Open Source Air Quality Sensors

Schematic is open to everybody. Want participate?
Go to: https://github.com/cellabox/cellabox

Sheet: /OutdorAirQualitySensors/
File: o3_no2_so2_co.sch

Created by: Reto Keller (c), Cellabox, Switzerland

Title: Outdoor Air Quality Sensors (O3, NO2, SO2, CO)

Size: A4	Date: 28.Jan.2018	Rev: A
KiCad E.D.A. kicad 4.0.7		Id: 2/2