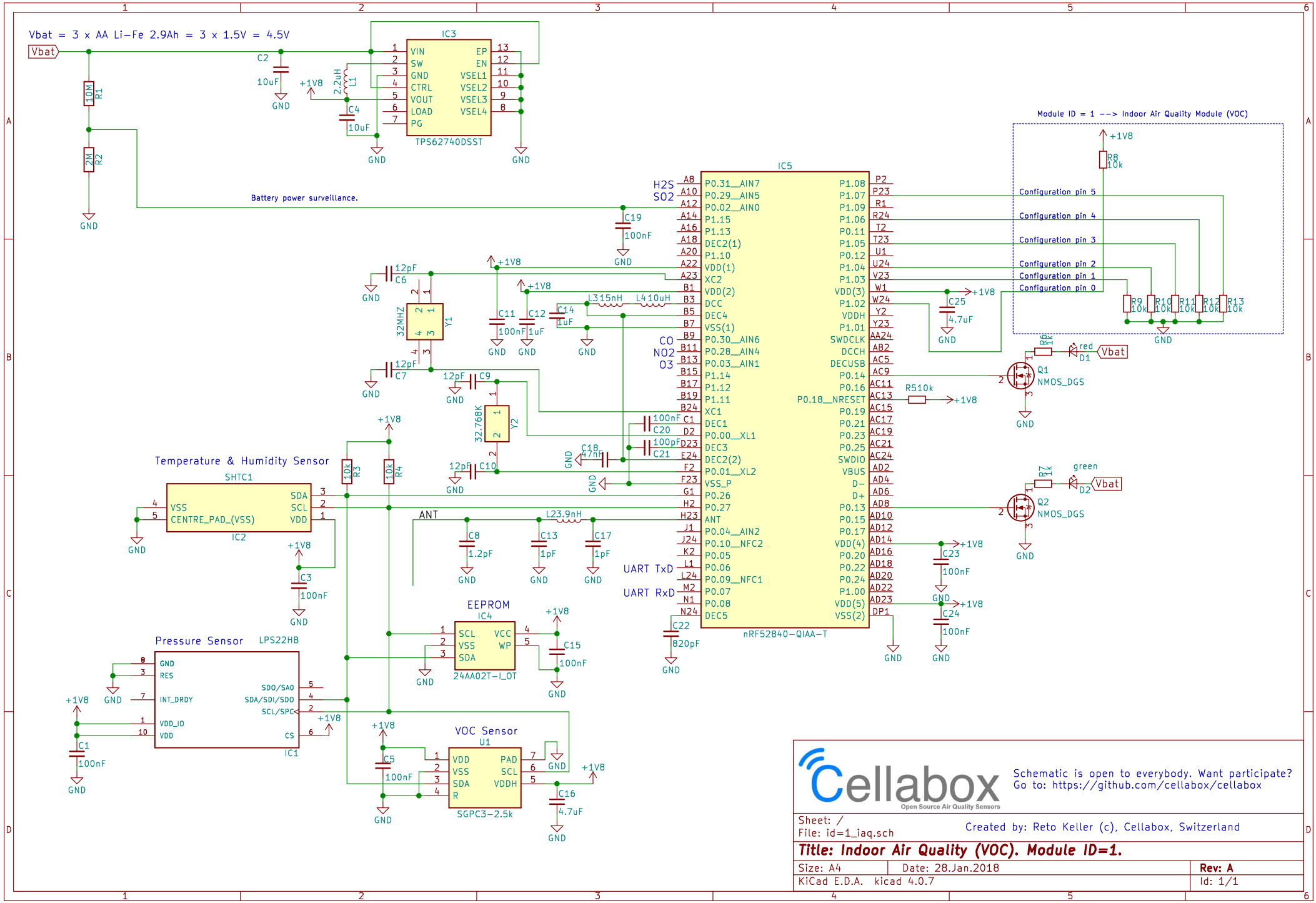

Cellabox
Open Source Air Quality Sensors

Schematic is open to everybody. Want participate?
Go to: https://github.com/cellabox/cellabox

Sheet: /
File: id=1_iaq.sch

Created by: Reto Keller (c), Cellabox, Switzerland

Title: Indoor Air Quality (VOC). Module ID=1.

Size: A4	Date: 28.Jan.2018	Rev: A
KiCad E.D.A. kicad 4.0.7		Id: 1/1